United States Patent [19]

Sanchez

[11] **3,924,114**

[45] **Dec. 2, 1975**

[54] **ILLUMINATED YO-YO**

[76] Inventor: **Gil C. Sanchez,** 2915 Miles Ave., Bronx, N.Y. 10465

[22] Filed: **July 14, 1972**

[21] Appl. No.: **271,676**

[52] **U.S. Cl.** ..... **240/6.4 R;** 46/61; 46/228

[51] **Int. Cl.**[2] **F21V 33/00;** A63H 27/12; A63H 33/26

[58] **Field of Search** ..... 240/6.4 R; 46/228, 61

[56] **References Cited**

UNITED STATES PATENTS

2,623,327	12/1952	Testino	46/228
2,795,898	6/1957	French	46/228
3,162,979	12/1964	Garoogian	46/228
3,191,344	6/1965	Yagjian	46/228

FOREIGN PATENTS OR APPLICATIONS

703,781	2/1954	United Kingdom	46/228

Primary Examiner—Richard A. Wintercorn

[57] **ABSTRACT**

An illuminated yo-yo constituted by a pair of hollow shell sections formed of translucent material and joined together by an axle to define a groove therebetween for receiving a coil of string. Mounted within each shell section is a light system consisting of a battery, a light bulb and two conductive strips, one of which, in cooperation with the base contact of the bulb, acts as a centrifugally actuated switch to intermittently complete a circuit between the bulb and battery in the course of yo-yo rotation.

1 Claim, 4 Drawing Figures

Fig. 1.

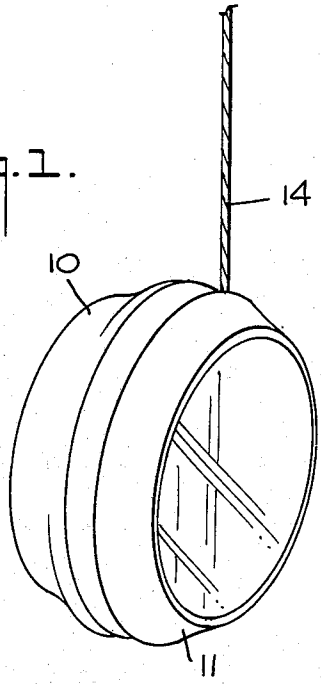

Fig. 2.

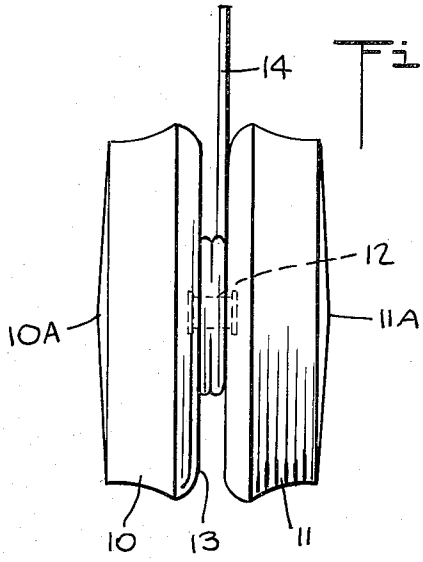

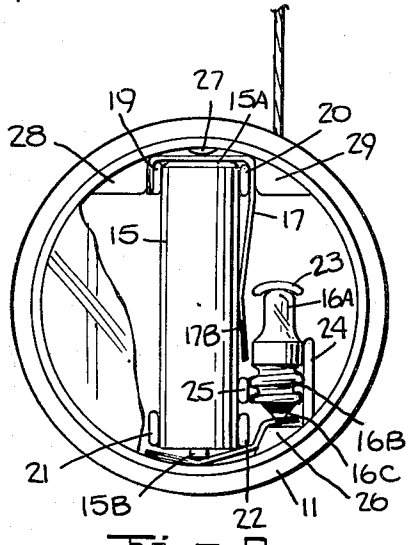

Fig. 3.

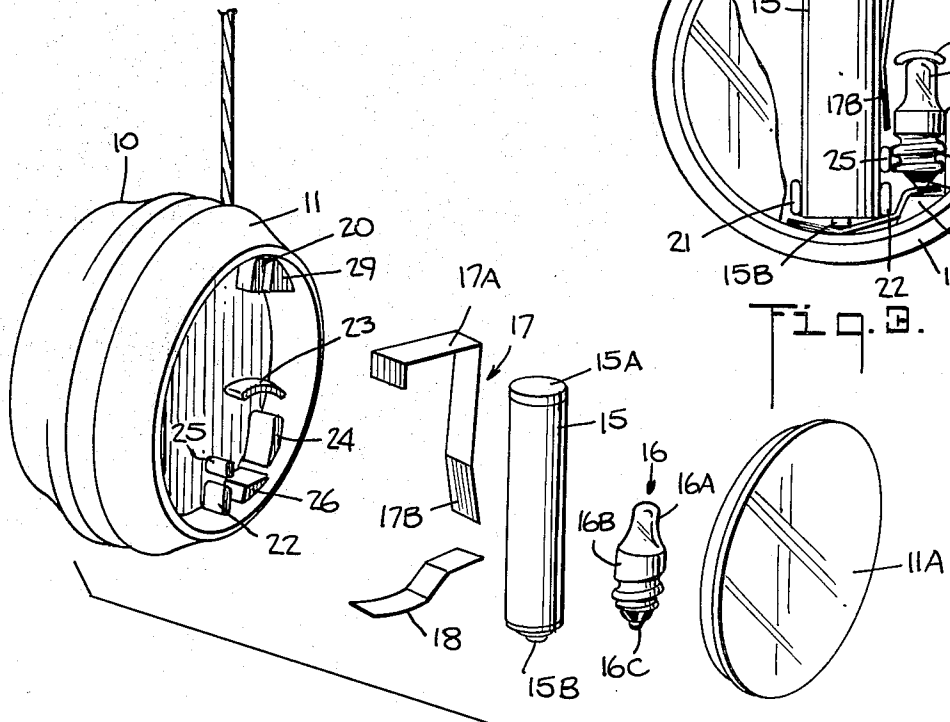

Fig. 4.

ILLUMINATED YO-YO

BACKGROUND OF THE INVENTION

This invention relates generally to an illuminated aerial top or yo-yo, and in particular to an illuminated yo-yo of simple, economical design, which operates efficiently to produce blinking lights effects on opposite sides thereof.

The traditional yo-yo is constituted by a drum-shaped, solid body having a deep central groove which effectively divides the body into a pair of circular sections joined together by an axle. One end of a string is attached to the axle, the string being coiled thereabout within the groove.

To operate the yo-yo, the player ties or loops the other end of the string about one finger of the hand holding the toy, and then hurls the yo-yo away from his hand. As the string unwinds, the yo-yo, in traveling away from the hand, is caused to rotate until a point is reached at which the attached string is fully unwound. At this point, because of momentum, the rotating yo-yo proceeds to rewind the string, causing the yo-yo to return toward the hand of the player.

In recent years, to heighten the pleasure obtained in playing with a yo-yo, especially at night, illuminated yo-yos have been developed making use of hollow sections, each incorporating a light system. This system is formed by a battery which is connected to a light bulb through a centrifugally actuated switch. As the yo-yo rotates, the switch intermittently connects the battery to the bulb to produce a blinking light.

The difficulty with existing light systems for illuminated yo-yos is that they involve a relatively large number of connecting elements as well as a distinct switch. Thus, in one known form of illuminated yo-yo, one pole of the battery is connected by a conductive strip to one terminal of the bulb, the other terminal being connected by a second strip to the fixed contact of a centrifugally-actuated switch whose movable contact is connected by a third strip to the other pole of the battery. These connecting elements and the switch add substantially to manufacturing and assembling costs. This added cost factor militates against the sale of yo-yo, particularly among young children having limited spending money.

SUMMARY OF THE INVENTION

In view of the foregoing, it is the main object of this invention to provide an illuminated yo-yo of simple, economical design, which operates efficiently to produce blinking light effects on both sides of the yo-yo in its course of rotation.

More specifically, it is an object of the invention to provide a light system for an illuminated yo-yo, which system is constituted by a battery, a light bulb and two conductive strips, one of the strips serving in conjunction with the base contact of the bulb as a centrifugally actuated switch, thereby obviating the need for a separate switch element, as in prior arrangements, and reducing the number of connecting elements.

Yet another object of the invention is to provide a light system for a yo-yo which may be assembled quickly and without difficulty.

Briefly stated, an illuminated yo-yo in accordance with the invention is constituted by a pair of hollow translucent shells of circular shape, joined together by an axle, each shell incorporating a light system consisting of a cylindrical battery whose length is almost equal to the inner diameter of the shell, the battery being disposed with its negative and positive poles at diametrically opposed positions in the shell.

One pole of the battery is connected by a conductive strip of resilient material to the tip contact of a light bulb disposed in parallel relation to the battery, the other pole of the battery being connected to a second conductive strip of resilient material whose end portion extends into the space between the battery and the base contact of the bulb and is normally separated from the base contact, whereby in the course of rotation, the end portion of the second strip makes intermittent contact with the base contact to effect energizing of the bulb.

OUTLINE OF DRAWING

For a better understanding of the invention as well as other objects and further features thereof, reference is made to the following detailed description to be read in conjunction with the accompanying drawing, wherein:

FIG. **1** is a perspective view of an illuminated yo-yo in accordance with the invention;

FIG. **2** is an elevational view of the yo-yo;

FIG. **3** is an end view of one section of the yo-yo with its cover removed to expose the light system therein; and

FIG. **4** is an exploded view of the light system.

DESCRIPTION OF THE INVENTION

Referring now to FIGS. **1** and **2**, a yo-yo in accordance with the invention is constituted by a pair of hollow shell sections **10** and **11** having a circular cross-section, the sections being joined together by a central axle **12** to define an annular groove **13** within which is coiled a string **14**, one end of which is attached to the axle in the usual manner.

The shell sections are fabricated or moulded of a suitable plastic material of good strength such as polyethylene, the material being transparent or translucent so that light produced by a bulb within a section causes it to glow. Each section is provided with a removable cover (**10A** and **11A**) to afford access to the light system therein to facilitate assembly and battery replacement.

Each light system, as shown in FIGS. **3** and **4**, has merely four components: namely, I, a dry-cell battery **15** of cylindrical form having a negative pole **15A** and a positive pole **15B**; II, a flashlight bulb **16** having a glass envelope **16A** containing a filament, a threaded base contact **16B** and a tip contact **16C**; III, a first conductive strip **17** of resilient material such as phosphor bronze or other spring metal which is bent into the form of the figure "**7**"; and IV, a shorter second conductive strip **18** of similar resilient material. The bulb base contact need not be threaded, since no threaded socket is provided therefor.

The length of the battery is slightly shorter than the inner diameter of the shell section in which it is received, the battery being placed therein so that its poles are at diametrically opposed positions. The position of the battery within the shell is maintained by a pair of spaced tabs **19** and **20** which embrace the negative end portion of the battery, and a second pair of spaced tabs **21** and **22**, which embrace the positive end portion of the battery. The tabs and other elements which hold

the components in place are all integral with the shell section and are molded therewith.

Bulb **16** is maintained in parallel relation to one side of battery **15,** the bulb being held in place by an arch **23** which hugs the head of the bulb envelope **16A**, a long tab **24** which engages one side of the base contact **16B**, and a short tab **25** in line with tab **22,** which engages the other side of the base contact.

Conductive strip **18** provides a connection between the positive pole **15B** of the battery and tip contact **16C** of the bulb, one portion of the strip being interposed between the circular wall of the shell and the positive pole, the other portion being interposed between a ledge **26** projecting from the shell and the tip contact **16C** of the bulb.

One end portion **17A** of strip **17** is interposed between a dimple **27** projecting from the circular wall of the shell and the negative pole **15A** of the battery, the bends in this end portion extending into the spaces between tab **19** and an adjacent ledge **28,** and between tab **20** and an adjacent ledge **29.** The other end portion **17B** of the strip passes into the narrow space between base contact **16B** and one side of battery **15,** the end portion **17B** being normally separated from the base contact but closely adjacent thereto.

However, in the course of yo-yo rotation, the resultant centrifugal forces cause end portion **17B** of the resilient strip to intermittently engage base contact **16B**, thereby completing the circuit between battery **15** and the bulb, and producing blinking light effects.

Because the light system is composed of only four components which may be put together simply by inserting them within the tabs and ledges adapted to receive them, without the need for soldering, the assembly operation is easily carried out.

While there has been shown and described a preferred embodiment of illuminated yo-yo in accordance with the invention, it will be appreciated that many changes and modifications may be made therein without, however, departing from the essential spirit of the invention.

I claim:

1. An illuminated yo-yo comprising a pair of hollow shell sections each having a removable cover and formed of translucent material and joined together by an axle to define a groove for receiving a coil of string, and a light system disposed in each shell section to produce a blinking light when the yo-yo is caused to rotate, each light system comprising:

A. a cylindrical battery disposed in said shell along the diameter thereof, said battery having a positive pole at one end and a negative pole at the other end,

B. a light bulb fixedly disposed adjacent one side of the battery in parallel relationship therewith to define a narrow space therebetween, said bulb having an envelope containing a filament, base contact and a tip contact, said shell having integral tabs and other means integral with the shell to maintain the position of the battery and of the bulb while exposing the base contact of said bulb in said narrow space,

C. a first conductive strip of resilient material, one end portion of which engages one pole of said battery, the other end portion engaging the tip contact of the bulb, and

D. a second conductive strip of resilient material, one end portion of which engages the other pole of said battery, the other end portion extending into the space between the battery and the exposed base contact and being normally out of engagement with said base contact, said other end portion being caused by centrifugal force intermittently to engage said contact in the course of yo-yo rotation.

* * * * *