July 20, 1965 C. A. KESSENICH 3,196,211

SPEAKER ARRANGEMENT

Filed Sept. 8, 1960

Fig. 1

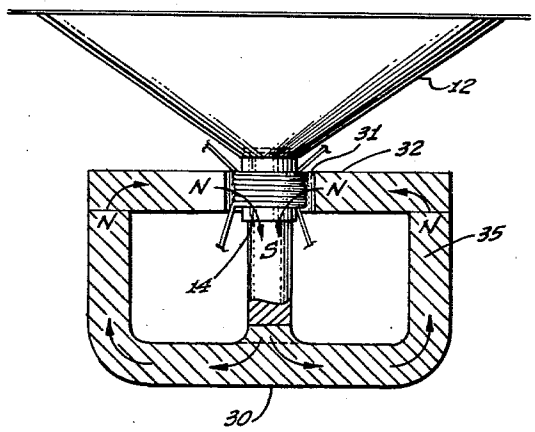

Fig. 2

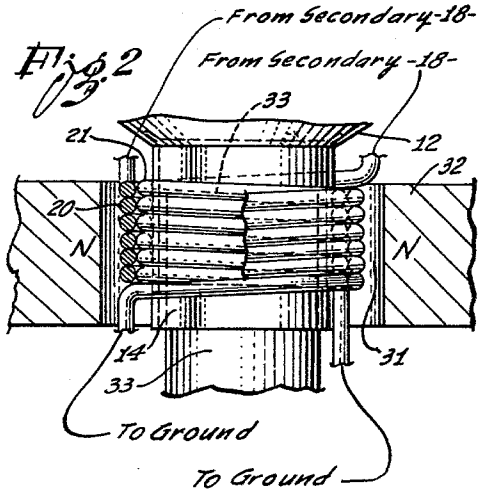

Fig. 3

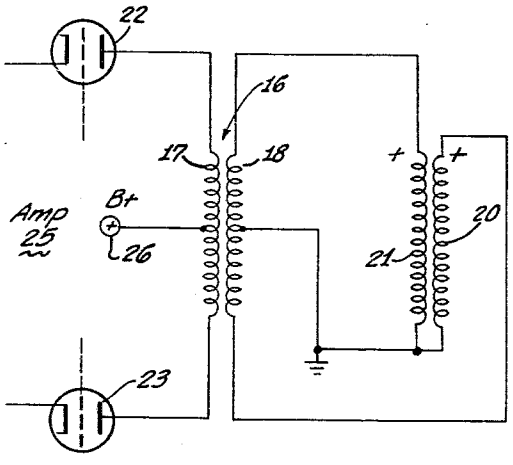

INVENTOR:
Carl A. Kessenich

By Smyth, Roston & Pavitt

Attorneys.

United States Patent Office 3,196,211 Patented July 20, 1965

3,196,211

SPEAKER ARRANGEMENT

Carl A. Kessenich, 4816 W. 93rd St., Inglewood, Calif.

Filed Sept. 8, 1960, Ser. No. 54,692
3 Claims. (Cl. 179—1)

This invention relates to loud speakers and, more particularly, to dynamic speakers and circuits therefor utilized in high fidelity audio systems.

The loud speaker in general use is the dynamic speaker which has a moving coil in a magnetic field as the motor mechanism. The magnetic field may be produced by either a permanent magnet or an electromagnet. When a permanent magnet is utilized, it generally forms an inner pole surrounded by a flux return structure made of high magnetic permeability material which forms the outer pole. The lines of flux from the magnet are forced across a narrow air gap in which a voice coil is located.

The gap usually takes the form of a ring, the sides of which form the two poles of a magnet, with the permanent magnet forming the inner pole. The voice coil is generally mounted on a paper or thin metal tube which is affixed to the diaphragm of the speaker. The windings of the voice coil are essentially perpendicular to the direction of the lines of magnetic flux passing between the two poles and across the gap. When a current is provided in the coil, a force is exerted upon the coil in an axial direction along the longitudinal axis of the voice coil. The axial direction is a direction perpendicular to the direction of the lines of flux. The polarity of the magnetic field, the winding direction of the coil and the direction of current through the coil determine whether the coil moves in one direction or in an opposite direction along the longitudinal axis of the coil.

As the coil moves axially responsive to the varying current through the voice coil, the diaphragm moves sympathetically therewith to develop the audible signals. With conventional coil and speaker arrangements, the diaphragm relies upon its suspension to return it to its original position after being displaced responsive to the force on the coil. This effect causes distortion particularly in the bass region of the frequency response where cone excursions are the greatest. This distortion effect occurs in conventional single voice coil arrangements and also in push-pull coil arrangements so that the volume of the sound must be reduced to avoid distortion.

In a specific illustrative embodiment of this invention, two coils are provided which are operated in a full-phase arrangement to push the diaphragm back and forth responsive to variations in the audio signals introduced to the coils. The suspensions of the diaphragm need not be relied upon to return the diaphragm to its original position. The two coils are provided on a paper or thin metal tube which forms a support for the voice coil. The coils may be wound in opposite directions and connected in the full-phase arrangement to the output of a push-pull class B amplifier circuit.

The magnetic flux induced by each of the two coils aids each other though the direction of current through the two coils is in opposite directions. The magnetic fluxes are additive because the coils are wound in opposite directions, with one being wound directly over the other. The two coils are, accordingly, in a tight inductive coupling so that relatively large magnetic flux changes are provided responsive to the current through the windings. Each coil not only develops a force due to the current through it, but it also induces current in the other coil to provide for a force in the same direction. A composite voice coil arrangement is, accordingly, provided wherein each coil provides for a force on a diaphragm and which causes the other coil to provide an additive force. The resultant arrangement is highly efficient providing for continuous forces in both directions and at relatively high values.

Various other advantages and features of this invention will become apparent upon consideration of the following description when read in conjunction with the drawing wherein:

FIGURE 1 is a sectional view of the dynamic speaker of this invention;

FIGURE 2 is an enlarged fragmentary view of the dynamic speaker of this invention illustrating the voice coil arrangement; and

FIGURE 3 is a circuit representation illustrating the electrical arrangement of the voice coils of the dynamic speaker of this invention.

Referring to FIGURES 1 through 3, the dynamic speaker 10 includes a diaphragm 12 for inducing audible signals responsive to the energization of two voice coils 20 and 21 which are wound upon a cylindrical member 14. The cylindrical member 14 may be made of paper which is adhered or affixed to the diaphragm 12. As shown particularly in FIGURE 2, the coil 20 is wound on top of the coil 21 and in an opposite direction thereto. The spacing and dimensions of the various components in FIGURE 2 is somewhat exaggerated to illustrate their relationship. Each of the coils 20 and 21 may illustratively have approximately 29 turns and may be made of enameled copper wire No. 32.

As shown in FIGURE 3, the two coils 20 and 21 are coupled between the center tap of a secondary winding 18 of a transformer 16 and one or the other of its ends thereof. The center tap may be grounded. The transformer 16 may be the output transformer for a class B push-pull amplifier 25 which includes two triodes 22 and 23. Plate potential is provided to the triodes 22 and 23 from a source 26 which is connected to the center tap of the primary winding 17 of the transformer 16.

The biasing in the class B amplifier is set so that only one of the two tubes 22 and 23 is conductive at any time. Responsive to the operation of the push-pull amplifier 25, current is provided in opposite directions through the two windings 20 and 21 at any instant. Current is provided through both windings 20 and 21 because they are inductively coupled and wound in opposite directions on the member 14. The magnetic flux introduced by the two windings 20 and 21 through the center of the member 14 in substantially the same direction. More specifically, when the tube 22 is conductive, a voltage is induced across the secondary 18 causing current to flow through the two windings 20 and 21 in opposite directions. The current through the winding 21 may be in a clockwise direction looking from the diaphram 12 to the windings, and it induces a current in a counterclockwise direction in the winding 20. Similarly, the counterclockwise current in the winding 21 induces a clockwise direction current in the winding 20. The effects are accordingly cumulative and additive.

The member 14, which supports the windings 20 and 21, is movably positioned over a core 33 which may be a cylindrically shaped permanent magnet. A return path, including a cylindrically shaped housing 30, is provided which may be made of high permeability material. The magnetic flux provided by the permanent magnet 33 is, in this manner, directed through the housing 30 with little leakage therefrom. The flux is directed, as indicated by the arrows in FIGURE 1, through the sides 35 of the housing 30 to a top disk shaped member 32 and across an air gap 31 to the permanent magnet 33.

The flux across the air gap 31 is aligned radially with respect to the axis of the permanent magnet 3. The current through the voice coils 20 and 21, is accordingly, in a direction substantially perpendicular in all positions of the voice coils to the direction of the magnetic flux

through the gap 31. A force is, accordingly, developed in a direction perpendicular to the direction of the magnetic flux which is in an axial direction with respect to the longitudinal axis of the voice coils 20 and 21. The voice coils 20 and 21 are, accordingly, driven axially back and forth in a full phase manner in accordance with the variations of the current through the coils.

As indicated above, the forces provided by the two coils aid each other because the coils are oppositely connected and the currents provided thereto are also in opposite directions. Any misalignment in the direction of the force due to currents through either winding is balanced by a corresponding but opposing misalignment in the direction of the force due to the currents through the other winding. Misalignment forces are the force components in a direction perpendicular to the axis of the magnet, and may be due to the helical arrangement of the windings. Misalignment forces introduce a distortion in the audible signals. The oppositely wound windings 20 and 21, however, compensate for this effect and balance out the misalignment.

The two coils 20 and 21 function to push the member 14 first in one direction and then in the opposite direction. The forces applied are continuously applied so that a mechanical reflex at the diaphram is not required, or at least may be quite small.. The thickness of the disc 32 which forms part of the flux return path of the structure 30 is greater than the axial length of the coils 20 and 21 as depicted in FIGURE 2. The coils 20 and 21 are, accordingly, fully between the pole formed by the internal circumference of the disc 32 as they move back and forth due to the audio current introduced thereto. Both phases of the audio signal are utilized so that smoother control and greater forces are provided. With the two coils 20 and 21 arranged in this manner, approximately 30 to 50 percent increase in volume is achieved over a single voice coil arrangement.

Although this invention has been disclosed and illustrated with reference to particular applications, the principles involved are susceptible of numerous other applications which will be apparent to persons skilled in the art. The invention is, therefore, to be limited only as indicated by the scope of the appended claims.

I claim:

1. A speaker arrangement for reproducing a particular frequency band of audio signals, including, a cylindrical magnet, a flux return structure for said magnet having a cylindrical portion surrounding one end of the magnet and forming a flux gap therebetween, a diaphram for generating sound waves, a coil form attached to said diaphragm and extending through said gap, a pair of coils wound on said coil form in opposite directions and positioned in said flux gap, the thickness of said cylindrical portion of said flux return structure being greater than the length of either of the pair of coils, one of said pair of coils being wound over the other of said pair of coils, and means including a class B push-pull amplifier coupled to said coils for applying said frequency band of audio signals in opposite directions through both of said coils in said pair.

2. In an electro-acoustic transducer apparatus for transforming varying electrical signals to corresponding sound vibrations: a magnetic field structure for generating a substantially constant magnetic field; a pair of oppositely wound coils for carrying the same frequency band of electrical signals and generating flux variations corresponding to the signal variations, one of said pair of coils being wound over the other of said pair of coils; means holding said pair of coils in a vibratable equilibrium position in said magnetic field for causing said generated flux variations to exert correspondingly varying forces tending to vibrate the pair of coils with respect to said equilibrium position; acoustic means connected to said pair of coils for delivering sound vibrations corresponding to the vibrations of the pair of coils; and amplifier means coupled to said pair of coils for introducing the same frequency band of varying signals of opposite polarity thereto to drive said pair of coils in a push-push arrangement so that each force moving the coils from the equilibrium position is followed by an equal and opposite force returning it to the equilibrium position.

3. In an electro-acoustic transducer apparatus for transforming varying electrical signals to corresponding sound vibrations: a magnetic field structure for generating a substantially constant magnetic field; a pair of oppositely wound coils for carrying the same frequency band of electrical signals and generating flux variations corresponding to the signal variations, said structure including a cylindrical magnet, a flux return structure for said magnet having a cylindrical portion surrounding one end of the magnet and forming a flux gap therebeteween, the thickness of said cylindrical portion of said flux return structure being greater than the length of either of the pair of coils; means holding said pair of coils in a vibratable equilibrium position in said magnetic field for causing said generated flux variations to exert correspondingly varying forces tending to vibrate the pair of coils with respect to said equilibrium position; acoustic means connected to said pair of coils for delivering sound vibrations corresponding to the vibrations of the pair of coils; and amplifier means coupled to said pair of coils for introducing the same frequency band of varying signals of opposite polarity thereto to drive said pair of coils in a push-push arrangement so that each force moving the coils from the equilibrium position is followed by an equal and opposite force returning it to the equilibrium position.

References Cited by the Examiner

UNITED STATES PATENTS

1,800,868	4/31	McClain	179—100.41
2,248,785	7/41	Van B. Roberts	179—115.5
2,925,541	2/60	Koch	179—115.5
3,061,675	10/62	MacDonald	179—115.5

FOREIGN PATENTS

693,290	6/53	Great Britain.

OTHER REFERENCES

"Handbook of Sound Reproduction," by Villchur, Radio Magazine Inc., 1957, page 139.

ROBERT H. ROSE, *Primary Examiner.*

L. MILLER ANDRUS, WILLIAM C. COOPER, STEPHEN W. CAPELLI, *Examiner.*