Dec. 3, 1940. M. KEVELSON ET AL 2,223,827

TRANSUTERINE INSUFFLATOR

Filed Aug. 3, 1938

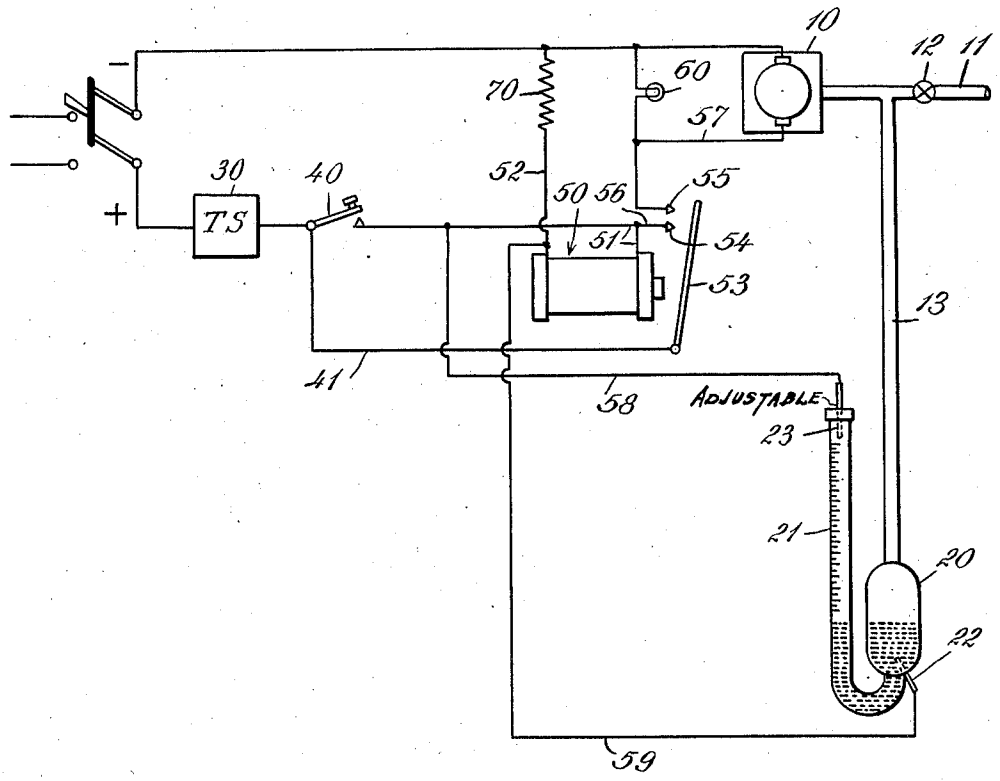

INVENTORS
Max Kevelson,
Oscar H. Bloom
BY
Marshall O'Hanley
ATTORNEYS

Patented Dec. 3, 1940 2,223,827

UNITED STATES PATENT OFFICE

2,223,827

TRANSUTERINE INSUFFLATOR

Max Kevelson, Far Rockaway, and Oscar H. Bloom, Brooklyn, N. Y.

Application August 3, 1938, Serial No. 222,818

6 Claims. (Cl. 123—2)

This invention relates to improvements in transuterine insufflators.

Its object is to provide a simple and inexpensive apparatus for testing the patency condition of the Fallopian tubes, which is automatic in its operation and which can have no harmful effect upon the patient.

Such arrangements as have been available heretofore are quite complex, use gases which are not always available, require a considerable amount of care and skill in use and are capable of causing the patient much discomfort and even serious injury.

Another object of our invention is to overcome all of these difficulties.

Gynecologists have determined that at least one hundred and eight (180) cubic centimeters of gas or air can be injected in a patient through the Fallopian tubes without discomfort or ill effects. We have provided a simple automatic arrangement by means of which the amount of air used cannot exceed this or some other predetermined maximum. Authorities have also determined that gas or air pressures up to two hundred (200) millimeters of mercury can be used safely. By our device this or some other predetermined pressure maximum cannot be exceeded.

These and other objects will appear in the following specification in which we will describe an apparatus which embodies the invention, the novel features of which will be set forth in appended claims.

The drawing which forms a part of this specific arrangement is a diagrammatic representation of a number of devices arranged to cooperate in a novel manner to embody our invention.

10 designates an electrically driven air compressor of constant delivery rate. We prefer to use one having a capacity of sixty (60) cubic centimeters of air per minute. 11 is a tube which can be led to the patient. A pinch valve 12 is interposed on or in this tubing.

Between the compressor and the valve is a branch pipe 13 which leads to the reservoir 20 of a mercury manometer, the vertical arm 21 of which is provided with graduations, by means of which the pressure in tube 11 may be observed. 22 is an electrical terminal in contact at all times with the mercury in reservoir 20. 23 is another terminal adjustably supported in a vented plug in the upper end of the arm 21.

30 is a time switch diagrammatically represented by a rectangle within which are the letters TS. This is of the type which may be set to open an electrical circuit at a desired interval of time after such circuit is closed.

40 is a normally open push button or switch. 50 designates generally a relay. 60 is a lamp and 70 a resistance. These parts and their co-ordinated relationship will be more specifically described in the following description of the operation of the apparatus. The tube 11 is led to a patient to be examined and applied through an applicator in the usual known manner. The time switch is set to open at a desired interval of time after a circuit has been established through it, for example, three minutes after its circuit is closed.

The operator then closes the switch 40 momentarily. A circuit is thereby established from the +main which is connected to the time switch, through the time switch, the switch 40 and conductor 51 to the winding of relay 50. The other end of the relay winding is connected through conductor 52 and resistance 70 to the —main. The relay will then be energized and will move its arm 53 against contacts 54 and 55. The first of these establishes a self-holding circuit for the relay by conductor 41 from the time switch, relay arm 53, contact 54 and conductor 56 to one end of the relay winding. The other end of the relay winding remains at all times connected with the negative main through resistance 70. Thus, the operator need but close switch 40 momentarily.

The relay arm 53 upon touching contact 55 closes another circuit from the time switch through conductor 57 to the motor of the air compressor 10. The other side of this motor is connected permanently with the negative main. The lamp 60 is connected between conductor 57 and the negative main and serves as a visible indicator to show when the motor circuit is closed.

The air from the generator will pass to the patient and in case of patency, through her Fallopian tubes without building up an undue amount of pressure. This operation will continue until the time switch opens the circuit to the motor and the circuit through the relay. If no undue pressure is indicated by the manometer during this period, it will show that there is no stoppage in the Fallopian tubes.

It is to be noted that with the factors used to explain the aforesaid operation, namely, a compressor capacity of sixty (60) cubic centimeters per minute and a time limit of three minutes, the maximum amount of air injected into the patient will be one hundred and eighty (180) cubic centimeters. It cannot exceed this limit of safety.

If the patient's tubes are not patent, a pressure

will be built up which will be immediately indicated by the manometer. The attendant may close the valve 12 to prevent an increase in pressure and may shut off the power from the compressor by opening the main switch.

In no case, however, can the pressure exceed a safe amount. When the mercury rises in the vertical arm of the manometer until it reaches the contact 23, the winding of the relay will be short circuited and it will open automatically to open the motor circuit. This is because one end of the relay winding is connected to contact 23 by conductors 51 and 53 and its other end to contact 22 by conductor 59, so that when contacts 23 and 22 are inter-connected by the mercury in the manometer, the relay winding will be short circuited and its arm 53 will move away from contacts 54 and 55, opening the motor circuit and the manometer circuit.

We have pointed out that the contact 23 is adjustably positioned and can be set to effect the short circuit when the air pressure in the patient and in the apparatus reaches any desired amount, such as two hundred (200) millimeters of mercury, which is known to be a safe maximum.

The effects in cases of patency or of stoppage have been pointed out. It is obvious that intermediate conditions of the Fallopian tubes may be observed similarly, but under all conditions, without any harm to the patient.

The electrical circuits shown may be varied according to the available power supply and other modifications made within the spirit and scope of the invention, and we intend no limitations other than those imposed by the appended claims.

What we claim is:

1. In combination with a transuterine insufflator having an air compressor and a conduit for leading air from the compressor to an applicator, a constant speed motor arranged to drive the compressor at a fixed rate to have a constant rate of discharge, means for stopping the motor positively at the end of a predetermined period of its operation, and means for preventing the pressure of the discharged air exceeding a predetermined upper limit.

2. In combination with a transuterine insufflator having an air compressor and a conduit for leading air from the compressor to an applicator, a constant speed motor arranged to drive the compressor at a fixed rate to have a constant rate of discharge, means for stopping the motor positively at the end of a predetermined period of its operation, and means for stopping the motor positively upon the pressure of the discharged air reaching a predetermined limit.

3. In combination with a transuterine insufflator having an air compressor and a conduit for leading air from the compressor to an applicator, a constant speed electric motor, a circuit therefor, said motor being arranged to drive the compressor at a fixed rate to have a constant rate of discharge, a time switch in the motor circuit arranged to open the motor circuit positively at the end of a predetermined period of its operation, and a pressure responsive device actuated by air discharged by the compressor arranged to open the motor circuit positively upon the pressure of the discharged air reaching a predetermined limit.

4. In combination with a transuterine insufflator having an air compressor and a conduit for leading air from the compressor to an applicator, a constant speed electric motor, a circuit therefor, said motor being arranged to drive the compressor at a fixed rate to have a fixed rate of discharge, an adjustable time switch in the motor circuit arranged to open the motor circuit positively at the end of a desired predetermined period of its operation, a pressure responsive device actuated by air discharged by the compressor arranged to open the motor circuit positively upon the pressure of the discharged air reaching a predetermined limit, and means for setting said device to operate at the desired pressure.

5. In combination with a transuterine insufflator having an air compressor and a conduit for leading air from the compressor to an applicator, a constant speed electric motor, a circuit therefor, said motor being arranged to drive the compressor at a fixed rate to have a fixed rate of discharge, an adjustable time switch arranged to open the motor circuit positively at the end of a desired predetermined period of its operation, and a pressure responsive device actuated by the air discharged by the compressor arranged to stop the motor positively upon the pressure of the discharged air reaching a predetermined limit, a self-holding relay arranged to control the motor circuit, circuits interconnecting the time switch, the relay and the pressure responsive device, and means for energizing the relay to close the motor circuit, said time switch being arranged to break the relay circuit to thereby open the motor circuit, said pressure responsive device being arranged to short-circuit the relay circuit to thereby open the motor circuit.

6. In combination with a transuterine insufflator having an air compressor and a conduit for leading air from the compressor to an applicator, a constant speed electric motor, a circuit therefor, said motor being arranged to drive the compressor at a fixed rate to have a fixed rate of discharge, an adjustable time switch arranged to open the motor circuit positively at the end of a desired predetermined period of its operation and a pressure responsive device actuated by the air discharged by the compressor arranged to stop the motor positively upon the pressure of the discharged air reaching a predetermined limit, a self-holding relay arranged to control the motor circuit, circuits interconnecting the time switch, the relay and the pressure responsive device, and a manually operated switch in said circuits for energizing the relay to close the motor circuit, said time switch being arranged to break the relay circuit to thereby open the motor circuit and said pressure responsive device being arranged to short-circuit the relay circuit to thereby open the motor circuit.

MAX KEVELSON.
OSCAR H. BLOOM.