July 5, 1932. H. V. MARSH 1,865,534

CAN DISPLAY EASEL

Filed March 11, 1931 2 Sheets-Sheet 1

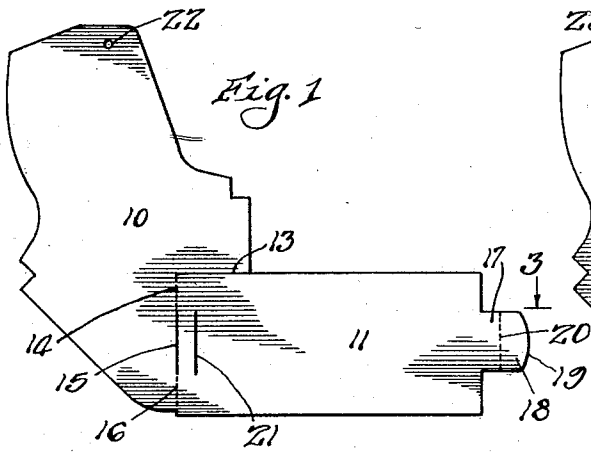

Fig. 1

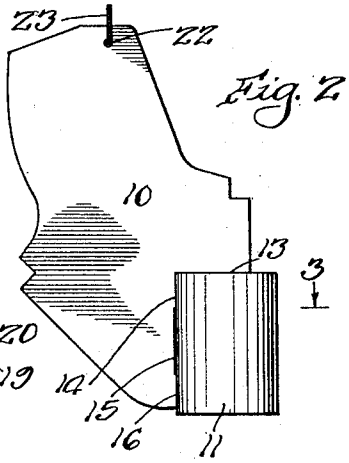

Fig. 2

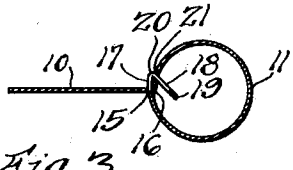

Fig. 3

Fig. 4

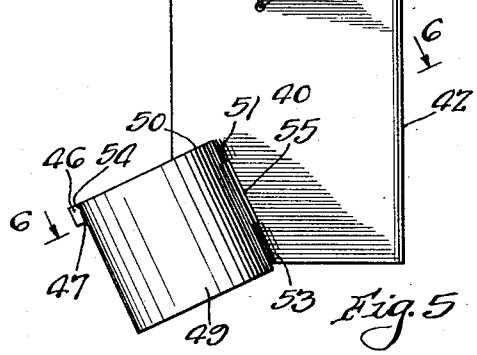

Fig. 5

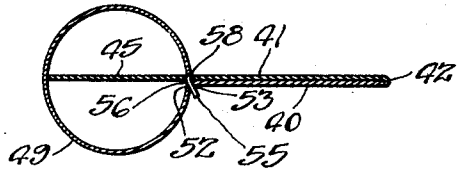

Fig. 6

Inventor:
Harry V. Marsh
By Albert M. Lloyd
Atty.

July 5, 1932. H. V. MARSH 1,865,534

CAN DISPLAY EASEL

Filed March 11, 1931 2 Sheets-Sheet 2

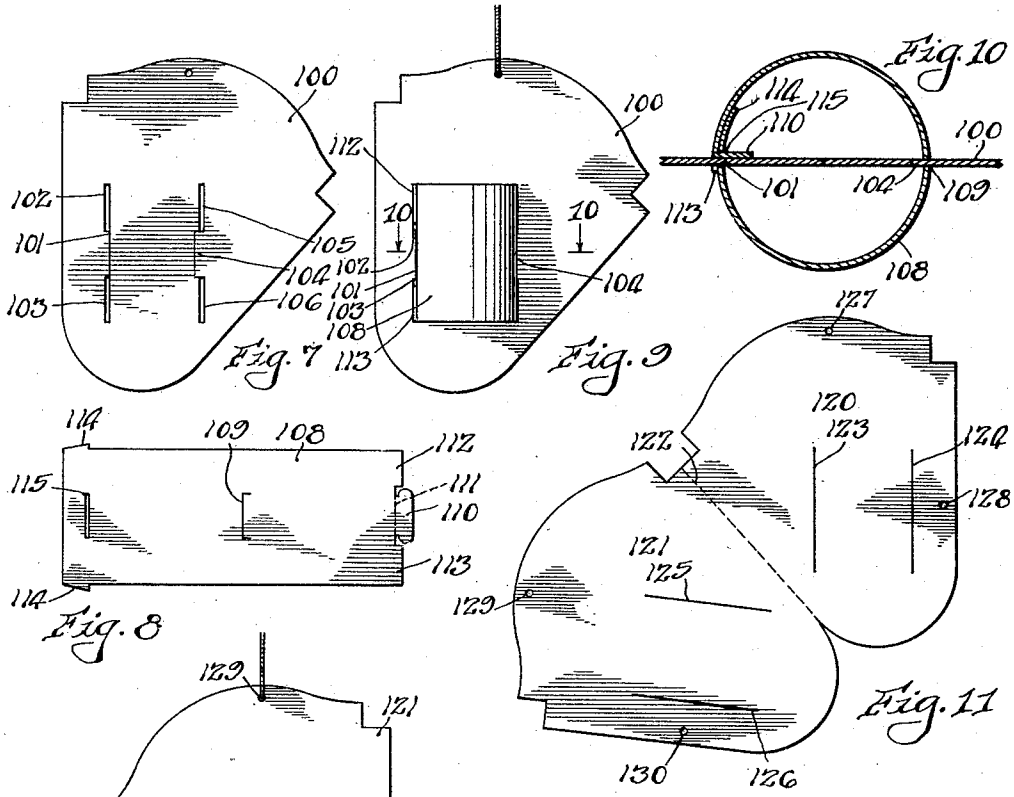

Inventor:
Harry V. Marsh
By Murray Lloyd
Atty.

Patented July 5, 1932 1,865,534

UNITED STATES PATENT OFFICE

HARRY V. MARSH, OF CHICAGO, ILLINOIS

CAN DISPLAY EASEL

Application filed March 11, 1931. Serial No. 521,802.

The present invention relates primarily to hanging displays and has to do with the provision of a novel means whereby a round, square of other shaped can or object may be reproduced physically as a part of a blank or blanks folded or articulated to provide such display.

Four forms of the invention are illustrated in the accompanying drawings, and in each of said forms a cylindrical can is disclosed. It is perfectly patent that a square, rectangular or other object for reproduction could be substituted for such cylindrical can.

The objects of the present invention are to provide an improved hanging display card; to provide a display card upon which a cylindrical or other object of three dimensions may be physically reproduced; and to provide an improved combination of a blank or blanks with slots and articulations whereby a replica of a can or other object may be made a part of a hanging display.

These objects, and such other objects as may hereinafter appear, are obtained by the novel construction, unique arrangement, and improved combination of the several elements shown in the four forms of the invention, hereinafter illustrated.

In the drawings:

Figure 1 is a plan view of a blank whereby one of the forms of the invention may be produced;

Figure 2 is a vertical view of the hanger when articulated;

Figure 3 is a section on the line 3—3 of Figure 2;

Figure 4 is a plan view of the blank by which the second form of the invention may be produced;

Figure 5 is an elevation showing the device formed by the articulation of the blanks shown in Figure 4;

Figure 6 is a section on the line 6—6 of Figure 5;

Figure 7 is a plan view of one of the blanks used in forming a third form of the invention illustrated;

Figure 8 is a plan view of the second blank used for forming the third form of the invention;

Figure 9 is an elevation of a display formed by a combination of the blanks shown in Figures 7 and 8;

Figure 10 is a transverse section on the line 10—10 of Figure 9;

Figure 11 is a plan view of a blank used in forming a fourth form of the invention;

Figure 12 is a plan view of a blank to be associated therewith;

Figure 13 is a similar view of another blank to be associated with the blank shown in Figure 11;

Figure 14 is an elevation of a display device formed by a combination of blanks illustrated in Figures 11, 12 and 13; and

Figure 15 is a transverse section on the line 15—15 of Figure 14.

Like reference characters are used to designate similar parts in the drawings and in the description of the invention which follows.

Reference will now be had to the form of the invention illustrated in Figures 1, 2 and 3.

The main body of the blank therefore is indicated by the numeral 10. A second section of the blank which is separated from the main body 10 by a slit 13, a score 14, a slot 15, and a score 16, is designated by the numeral 11.

The two scores 14 and 16 and the slot 15 are in alignment and are normal to the slit 13. At the free end of section 11 is a tab comprising a section 17 which has the same general direction as the body 11 and which is not normally articulated therefrom, and a second section 18 extending from section 17 and which terminates in a rounded tongue 19. Section 18 is separated from section 17 by a score 20. Adjacent the slot 15 is a slot 21 of the same length as the slot 15 and parallel thereto. It will be noted that said slot 21 is disposed away from said slot 15 at a distance equal to the transverse extent of the tab 17. Thus, when the device is articulated as is shown in Figures 2 and 3, the section 19 is inserted through the slot 15 until the shoulder formed by the free end of the body 11 defining the beginning of the section 17 abuts the material of body 10 opposite the scores 14 and 16, whereupon tongue 19 and section 18 are inserted through slot 21 into

the interior of a cylinder formed of section 11.

Extension 17, tightly held against the wall of body 11 when the section 18 is articulated in the score 20 and causes said body 11 to assume a cylindrical configuration.

It is manifest that other forms of the device are possible, both in respect to the shape of the body and the size thereof and in respect to the extension 11 which may be articulated or otherwise treated so that it may be folded into or arranged to produce a parallelopiped body or any other suitably shaped object which may be selected for reproduction.

The placard may be shipped flat and articulated at a later date, and at the convenience of the user. An aperture 22, normally off center to counteract the extra weight in the can of the blank through which a string 23 is inserted, is provided for the purpose of permitting of the ready hanging of the sign.

The second form of the invention is illustrated in Figures 4, 5 and 6. In such form of the invention, the main body of the device comprises the members 40 and 41 which are adapted to be folded one upon the other as is illustrated in Figures 5 and 6. The score therebetween said members to provide ready articulation is designated 42. When articulated said members may be adhesively secured one to another.

Section 41, at its free edge and on one corner preferably, has a slight extension defined by the dotted lines 43 and 44 which are imaginary definitions of the member 41. Extension therebeyond, that is, beyond the line 43 includes a triangular section of material 45 terminating in a hooked corner portion 46, the slot dividing the body portion of the hook 46 from section 45 being designated 47, the material extending beneath the line 44 is also triangular in configuration and is designated generally by the numeral 48. The corner of said triangle is slightly offset from the lower edge of sheet 41.

From the member 40, there is an extension generally designated 49. Extension 49 is divided from member 40 by a die-cut 50, a score 51, a slot 52, and a score 53, the scores 51 and 53 and slot 52 being in alignment and normal to die-cut 50. Intermediate its length and approximated one-half its length, there is a nick or notch 54 in the top edge of member 49. At its free end is a tongue 55 separated from the main body by a score 56 and a short slot 57, the score and slot being aligned.

When articulated, as is shown in Figures 5 and 6, the part 41 is folded over the part 40, and section 49 is rolled (or folded) so that the tongue 55 projects through a slot 58 in the member 41, which slot 58 is parallel to the outer edge of extension 45. Said slot 58 is in alignment with the offset section of extension 48. When said tongue 55 is inserted through slot 58, it may be bent or held between the material of sections 40 and 41 or it may be extended through the slot 52 in member 40 as preferred.

The slot 57, intermediate the tongue 55 and extension 49, is adapted to hook into the material of the part 40 defined by the slot 52 to assist in the firm attachment of section 49 in its articulated and proper position.

The hook 46 is adapted to extend into the niche 54, the material of hook 46 extending over a portion of the material of section 49 because of the interlock of the slot 47 with the material of part 49 beneath the slot 54.

That portion of the material defined by the slot 58, and the parallel edges of the extensions 47 and 48 provide a diametric support or spreader for member 49 when articulated whereby to insure that said section will retain its selected shape. Of course, the member 49 may be articulated or otherwise formed to provide for a body of other than of cylindrical configuration, as for example, the so-called square can in which many items of commerce are packed. Any other selected configuration may be substituted therefor.

By the interlocks just described, the whole placard is adapted to be held in folded position and assembly thus obtained may be made more secure (in the absence of adhesive) by the employment of a string 59 extending through apertures 60 and 61 in the parts 40 and 41, respectively, said apertures being complemental when the device is in assembled relation.

A third form of the invention is illustrated in Figures 7, 8, 9 and 10. In such form of the invention, two blanks are employed. Reference will be had first to Figure 7. There is shown therein a flat blank 100 which may be of any suitable size or configuration. At the left hand side of blank 100 is a slit 101. At each end of the slit 101 are slots 102 and 103. A tortuous or U-shaped slit 104 is arranged at the opposite side of the blank 100, and adjacent the ends of the slit 104 are slots 105 and 106.

A second blank is used to form a cylindrical or other shaped portion of the device and is designated 108. At its center it has a U-shaped slit 109 the ends of which are removed from the top and bottom edges of the blank 109. At the right hand end, Figure 8, is a tongue 110 which is formed by a slit extending inwardly to the score 111 which divides said tongue 110 from the main body of the blank 108. Extensions of the material of the blank 108 extend from the right hand end thereof in alignment with the tongue 110, said extensions being indicated 112 and 113.

At its other end said blank has a slightly enlarged section 114 the top and bottom edges of which converge toward one another. On a line intermediate the division point be-

tween the blank 108 and extension 114 is a slot 115.

In assembling, the extension 114 determines the limit of extension of member 108 through the slit 101 of the blank 100. Said blank 108 is pulled through said slot as far as extension 114 will permit and thereafter the section of the blank 108 upon which the tongue 110 is disposed is inserted through the slot 104 until there is an inter-connection between the slot 109 and the tongue formed by the tortuous slot 104. Thus a rounded bulge is formed on one side of the blank 100 as is shown in Figure 9.

The remainder of the material of the blank 108 is rolled around extension 114 as is shown in Figure 10, the tongue 110 being inserted through the slot 115, whereby it becomes parallel to the flat surface of the blank 100. The side extensions 112 and 113 project through the slits 102 and 103 to provide an additional interlock between the blank 108 and the blank 100.

In such form of the invention, the two parts of the device may be shipped in "knocked down" form and readily assembled when needed. The assembly is quite simple and can be accomplished by the following of simple instructions.

A fourth form of the invention is illustrated in Figures 11, 12, 13, 14 and 15.

The main blank for such form of the invention comprises two complemental sections 120 and 121 which are separated by a score 122. In section 120 are two slots 123 and 124 which are complemental respectively to slots 125 and 126 in section 121. Two apertures 127 and 128, may be provided in section 120 and these are complemental to apertures 129 and 130 in section 121.

A string is inserted through the apertures 127 and 129, and any suitable fastening means like the fastening means 131 shown in Figure 14 may be employed to hold sections 120 and 121 together.

Upon each side of the device an identical blank is employed. That used upon the side defined by the section 120 comprises the main body 132 and tongue extensions 133 and 134. Section 132 is adapted to be bowed with its ends 133 and 134 projecting through the slots 124 and 123 respectively. Scores may be arranged as shown to facilitate the articulation of the tongues 133 and 134.

The blank shown in Figure 13 and which is identical with the blank illustrated in Figure 12 has a body 135 and extensions 136 and 137. Scoring shown by the dotted lines may be employed. Said member 135 is adapted to be inserted into the blank 121 with the extension 136 inserted through slit 126 and with extension 137 inserted through slit 125. In the assembled form of the invention shown in Figures 14 and 15, the tongue 133 and the tongue 136 are adapted to be arranged in parallelism between the material of the sections 120 and 121, and the remaining tongues 134 and 137 are adapted to be arranged in similar parallelism but pointing in the opposite direction as is clearly shown in Figure 15.

The shape of the blanks 120 and 121 may be altered to suit convenience or desire of the user. The resiliency of blank 120—121 permits of the attachment of blanks 132 and 135 to the sides thereof by the use of the tongues on said blanks which are securely held in position by such resiliency.

While four forms of the invention are illustrated, it should be manifest from an examination thereof that the invention may take many other forms without departing from the spirit of the claims hereto appended.

I claim:

1. In a display device, a blank divisible into two substantially equal sections having complemental extensions of different configurations, one of said extensions being adapted to be articulated about the other to provide a simulation of a container of merchandise.

2. In a display device, a blank having a score whereby it may be folded into two sections superimposed one upon the other, there being extensions upon each section complemental in position but unlike in form and having interlocking parts, one of said extensions being adapted to be articulated about the other to provide a simulation of a container for merchandise, such simulation being adapted to be maintained by the engagement of said interlocking parts.

3. In a display device, a blank having a score whereby it may be folded into two sections superimposed one upon the other, there being extensions upon each section complemental in position but unlike in form and having interlocking parts, one of said extensions being adapted to be articulated about the other to provide a simulation of a container for merchandise, such simulation being adapted to be maintained by the other extension which provides a diametric support for the articulated extension.

4. A scored and slotted blank for forming a display device having a body and an extension possessing a tongue articulated intermediate its length, said extension being adapted to be articulated to simulate a container for merchandise, and said slot being adapted to be inserted into a slot in said blank, the unarticulated section of said tongue engaging a section of the wall of said extension to maintain said extension in the selected geometric shape.

5. A display device having a main body and projecting extensions therefrom to simulate a container for merchandise having three

dimensions, said main body and said extensions having slots and tongues whereby said projecting extensions are maintained in a predetermined shape by the interlocking of the material of said body and extensions at the intersection of said tongues and slots.

HARRY V. MARSH.