Aug. 16, 1949. G. S. JOHNSON 2,478,924

ROTARY INTERNAL-COMBUSTION ENGINE

Filed Sept. 19, 1946 3 Sheets-Sheet 1

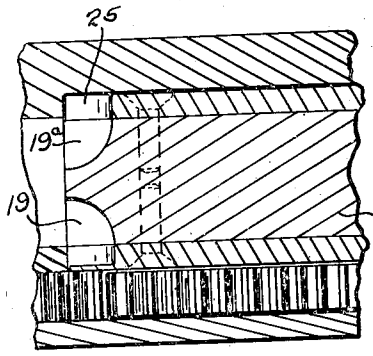

Fig. 4.

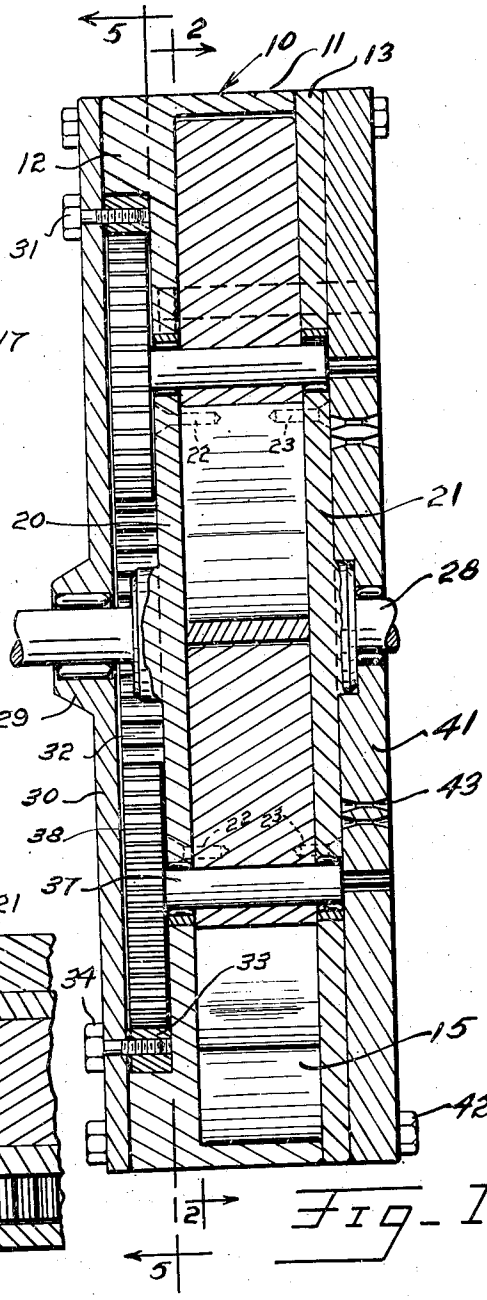

Fig. 1.

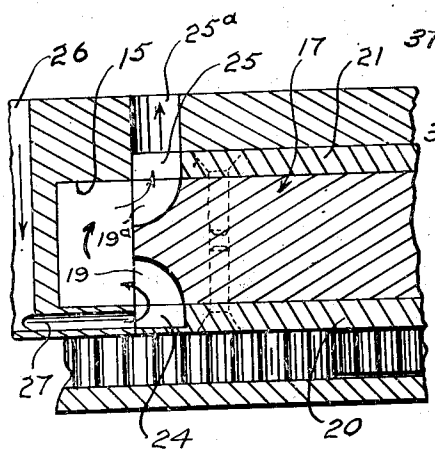

Fig. 6.

Inventor

GETTY S. JOHNSON

By

Kemmel & Crowell Attorneys

Aug. 16, 1949. G. S. JOHNSON 2,478,924

ROTARY INTERNAL-COMBUSTION ENGINE

Filed Sept. 19, 1946 3 Sheets-Sheet 2

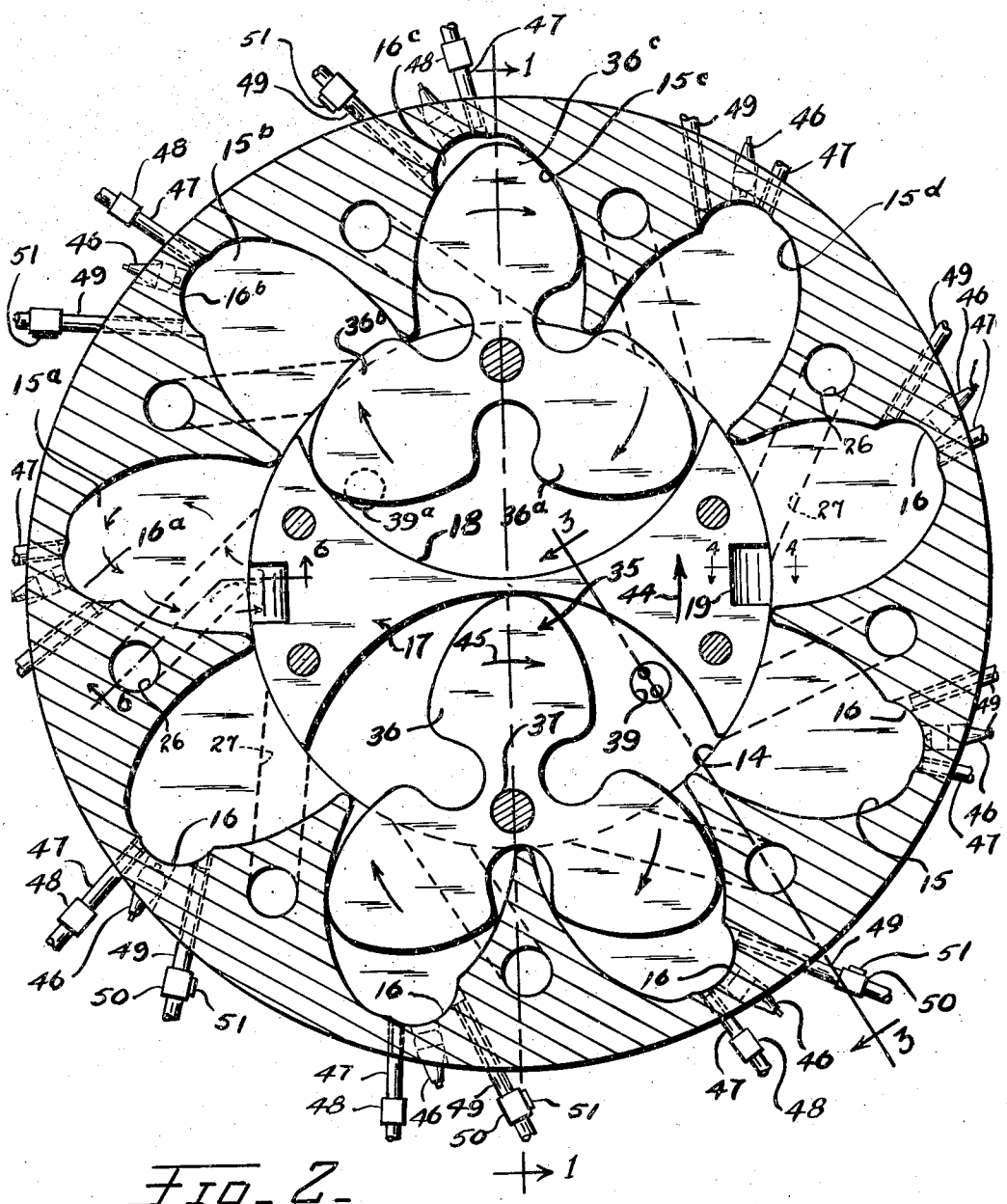

Fig. 2.

Inventor

GETTY S. JOHNSON

By

Kenneth Crowell Attorneys

Aug. 16, 1949. G. S. JOHNSON 2,478,924

ROTARY INTERNAL-COMBUSTION ENGINE

Filed Sept. 19, 1946 3 Sheets-Sheet 3

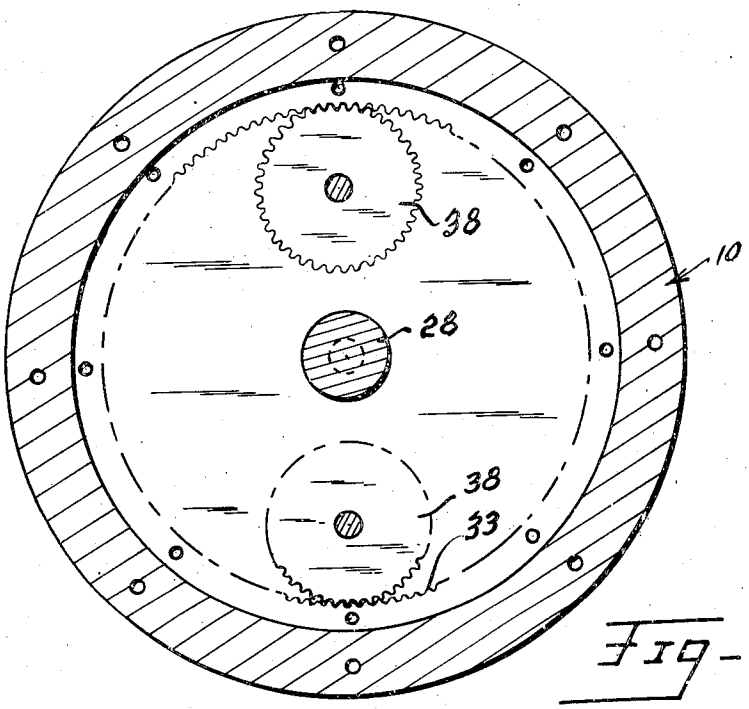

Fig. 5.

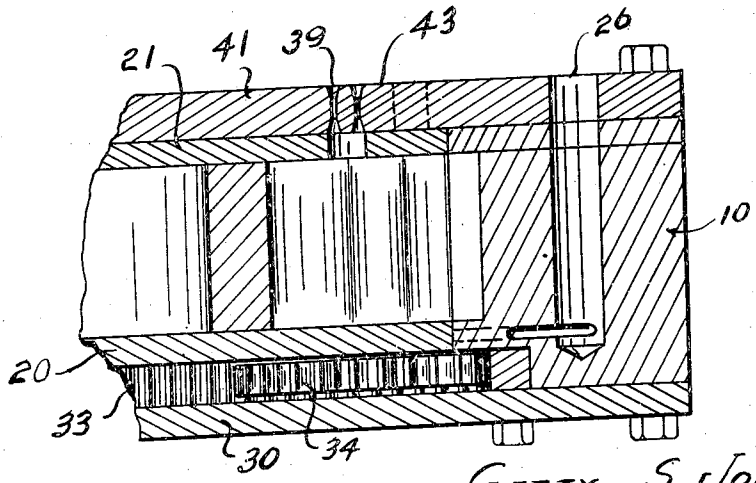

Fig. 3.

Inventor
GETTY S. JOHNSON

By
Kimmel & Crowell Attorneys

Patented Aug. 16, 1949 2,478,924

UNITED STATES PATENT OFFICE

2,478,924

ROTARY INTERNAL-COMBUSTION ENGINE

Getty S. Johnson, Charleston, W. Va.

Application September 19, 1946, Serial No. 698,027

2 Claims. (Cl. 123—12)

1

This invention relates to rotary internal combustion engines.

An object of this invention is to provide a rotary internal combustion engine wherein the impulse acts upon a rotary piston carried by a rotor, and the rotary piston is geared to the stationary housing.

Another object of this invention is to provide a rotary engine embodying oppositely disposed substantially ovoidal pistons which are movable within an orbit formed with a plurality of radially arranged substantially ovoidal cylinders.

A further object of this invention is to provide a rotary engine which will be smooth in running and will embody a plurality of power impulses for each rotation of the rotor.

A further object of this invention is to provide a rotary engine wherein the air used for compression is discharged into the cylinders under a predetermined pressure, and water in the form of mist is discharged into the compressed air for the initial purpose of cooling the cylinders and for the purpose of mixing with the fuel mixture so as to form an expansible mixture which will expand beyond the limit of an air and fuel mixture.

A further object of this invention is to provide a rotary engine in which the exhaust gases are readily scavenged from the cylinders and the air remaining in the cylinders after scavenging is used for mixture with the water and fuel.

A further object of this invention is to provide an improved rotary engine which is of practical and simple construction and which embodies sturdy movable parts so that the engine will withstand hard usage.

With the above and other objects in view, my invention consists in the arrangement, combination and details of construction disclosed in the drawings and specifications, and then more particularly pointed out in the appended claims.

In the drawings,

Figure 1 is a vertical section through a rotary internal combustion engine, constructed according to an embodiment of this invention, taken substantially on the line of 1—1 of Figure 2.

Figure 2 is a sectional view taken on the line 2—2 of Figure 1,

Figure 3 is a fragmentary sectional view taken on the line 3—3 of Figure 2,

2

Figure 4 is a fragmentary sectional view taken on the line 4—4 of Figure 2,

Figure 5 is a sectional view taken on the line 5—5 of Figure 1,

Figure 6 is a fragmentary sectional view taken on the line 6—6 of Figure 2.

Referring to the drawings, the numeral 10 designates generally an annular housing formed of a circular outer wall 11, an integral side wall 12, and a removable opposite side wall 13. The housing 10 is formed with an annular rotor chamber 14 and is also formed with a plurality of radially arranged substantially ovoidal cylinders 15 extending from chamber 14 and communicating with the latter. Each cylinder 15 is also formed adjacent the outer portion thereof with an offset combustion chamber 16.

The housing 10 has rotatably mounted therein a rotor generally designated as 17. The rotor 17 is formed with opposed arcuate cut-outs 18 forming piston chambers, and the rotor 17 also includes an opposed pair of exhaust ports 19. The ports 19 are arranged in pairs disposed diametrically of each other and the rotor 17 also includes a pair of disc-shaped plates 20, 21 secured by fastening means 22 and 23 respectively to the opposite sides of the rotor body. These plates 20, 21 are also formed with ports 24 and 25 respectively, communicating with the ports 19.

The housing 10 is also formed with air passages 26 extending transversely between pairs of cylinders 15, and the transverse or right angular passages communicate at their inner ends with inclined passages 27 which communicate with the ports 24 when the latter are in registration with the passages 27. The rotor is carried by a shaft 28 journaled in bearings 29 carried by an outer plate 30, fixed by fastening means 31 to the housing wall 12. The wall 12 is formed with an annular recess or chamber 32 within which a ring gear 33 is secured by fastening means 34.

The rotor 17 has rotatably mounted between the plates 20, 21 thereof, a pair of piston units generally designated as 35. Each piston unit 35 includes a plurality of radially arranged ovoidal pistons 36 which are fixed to a shaft 37 journaled through plates 20, 21. A spur gear 38 is mounted on each shaft 37 and extends into the gear chamber 32 and meshes with the ring gear 33. In this manner upon rotation of the rotor 17 the

piston units will also be rotated in a planetary movement with the rotor.

The rotor plate 21 is provided with an exhaust port 39 opening into each chamber 18, and the outer plate 41 fixed to the housing 10 by fastening means 42 is formed with a plurality of circumferentially arranged exhaust openings or ports 43 which are adapted to be in constant communication with the exhaust ports 39 upon rotation of the rotor 17. The rotor 17 is adapted to rotate in the direction shown by the arrow 44 in Figure 2, and the piston units 35 are adapted to rotate in the direction indicated by the arrow 45 in Figure 2.

Each combustion chamber 16 has associated therewith an igniter or spark plug 46 and a fuel pipe 47 is connected with the combustion chamber 16 and has interposed therein a fuel injector 48. The fuel injector 48 is a conventional fuel injector of the compression injection type so that when the air in cylinder 15 and the combustion chamber 16 is compressed to a predetermined degree by a piston 36, the fuel will be injected into the compressed air. After the motor has been operated for a period whereby the motor will become heated to a predetermined degree, the motor structure is adapted to be cooled by water entering each cylinder 15 through a water injection pipe 49. The pipe 49 has interposed therein a water injector 50 of conventional construction, and of the compression injection type similar to the fuel injector 48. The water injector 50 is regulated as to its operation by means of a conventional thermostat 51. Preferably the water is injected in the form of a spray ahead of the fuel injection so that this water upon entering the heated cylinder 15 will initially cool the cylinder and will be turned into steam for mixture with the compressed air and fuel so that when the fuel mixture ignites there will be a greater expansion of the mixture than would be the case if only air and fuel were mixed together.

In the operation of this engine, air is admitted to one cylinder, such as cylinder 15*a*, when the rotor 17 is in a position with the port 19 thereof and the port 24 of plate 20 in communication with an air passage 27. The air in passages 26 and 27 is under pressure from an independent pressure source so that when port 24 registers with a passage 27, air will enter the cylinder 15*a* and this air will scavenge cylinder 15*a*, flowing out through the outlet port 19*a* of rotor 17 through port 25*a* of plate 41.

As rotor 17 turns in counterclockwise rotation, as viewed in Figure 2, port 24 will move out of register with air passage 27, leaving cylinder 15*a* filled with air. When rotor 17 rotates an additional distance, piston 36*a* will enter cylinder 15*a* so as to thereby compress the air present in this cylinder and when the air has been compressed to a predetermined degree, injector 48 will operate and inject fuel into combustion chamber 16*a*. As noted in Figure 2, piston 36*b* is on the compression stroke thereof wherein this piston is just entering cylinder 15*b*. At this time piston 36*c* is completely within the cylinder 15*c* and is beginning the power stroke, the air and fuel mixture being compressed within the combustion chamber 16*c*. At the same time piston 36*a* is just passing out of cylinder 15*d*, being on the expansion stroke. As soon as piston 36*b* uncovers the exhaust port 39*a*, the exhaust gases which are in the space between the pistons 36*a* and 36*b* will be exhausted through the exhaust port 39*a*. The exhaust cycle will continue until piston 36*a* moves to a position closing

the exhaust post 39*a*, at which time piston 36*a* will be on the compression stroke and will enter cylinder 15*a*.

The rotor 17 is so constructed, and the air ports 24 and 25 together with ports 19 and 19*a*, are so arranged, that the periphery of the rotor 17 cut off adjacent cylinders, such as cylinders 15*a* and 15*b* at the time piston 36*b* is on the compression stroke thereof and until piston 36*b* substantially enters cylinder 15*b*.

With an engine as hereinbefore described, there will be provided a balanced rotor structure wherein the pistons are of the rotary type instead of the reciprocating type, and the pistons form rotary abutments which are carried by the rotor. It will be understood that there may be as many cylinders 15 in the housing 10 as may be desired, there being nine such cylinders shown, and as there are two piston units, each formed of three pistons, there will be eighteen power strokes for every rotation of the rotor.

I do not mean to confine myself to the exact details of construction herein disclosed, but claim all variations falling within the purview of the appended claims. Also I do not mean to confine myself to the within described method of cooling as if desired the engine may be cooled with conventional methods of cooling such as water jackets, fins or the like.

What I claim is:

1. A rotary internal combustion engine comprising a stationary housing having a plurality of radially arranged inwardly opening ovoidal cylinders, a rotor rotatably disposed in said housing and adapted to close the inner ends of said cylinders, said rotor having a pair of oppositely disposed arcuate chambers opening toward said cylinders, said housing having an air intake port confronting one side of said rotor, and having an air outlet port opposite from said intake port, said rotor having a pair of recesses extending inwardly from the periphery thereof adapted to register with said air intake and outlet ports whereby air under pressure may be admitted to each cylinder for scavenging said cylinders, said rotor having an exhaust port communicating with each chamber, and said housing having spaced exhaust ports with which said rotor exhaust ports are adapted to register, a piston unit rotatably carried by said rotor in each chamber, each unit being formed of a plurality of ovoidal pistons engageable in said cylinders, a combustion chamber laterally offset from each cylinder, and means discharging fuel into each cylinder.

2. A rotary internal combustion engine comprising a stationary housing having a plurality of radially arranged inwardly opening ovoidal cylinders, a rotor rotatably disposed in said housing and adapted to close the inner ends of said cylinders, said rotor having a pair of oppositely disposed arcuate chambers opening toward said cylinders, said housing having an air intake port confronting one side of said rotor, and having an air outlet port opposite from said intake port, said rotor having a pair of recesses extending inwardly from the periphery thereof adapted to register with said air intake and outlet ports whereby air under pressure may be admitted to each cylinder for scavenging said cylinders, said rotor having an exhaust port communicating with each chamber, and said housing having spaced exhaust ports with which said rotor exhaust ports are adapted to register, a piston unit rotatably carried by said rotor in each chamber, each unit being formed of a plurality of ovoidal

pistons engageable in said cylinders, a combustion chamber laterally offset from each cylinder, means discharging fuel into each cylinder, and means discharging water into each cylinder on the compression cycle.

GETTY S. JOHNSON.

REFERENCES CITED

The following references are of record in the file of this patent:

UNITED STATES PATENTS

Number	Name	Date
542,846	Diesel	July 16, 1895
704,995	Weiss	July 15, 1902
1,088,391	Almy	Feb. 24, 1914
1,093,278	Loftus	Apr. 14, 1914
1,970,594	Brady	Aug. 21, 1934
2,136,066	Walters	Nov. 8, 1938
2,296,768	Cochran	Sept. 22, 1942

FOREIGN PATENTS

Number	Country	Date
145,149	Great Britain	June 25, 1920