2

INSTRUCTIONS

(a) If Convention application insert "Convention"

AMENDED

(a) convention

AUSTRALIA 618033

Patents Act



(b) Delete one

APPLICATION FOR A (b) STANDARD/~~PETTY~~ PATENT

(c) Insert FULL name(s) of applicant(s)

I/We (c) THE COCA COLA COMPANY

(d) Insert FULL address(es) of applicant(s)

of (d) 310 North Avenue,
Atlanta, Georgia 30313,
United States of America

(e) Delete one

hereby apply for the grant of a (e) Standard/~~Petty~~ Patent for an invention entitled

(f) Insert TITLE of invention

(f) CONVERTIBLE BEVERAGE DISPENSER

(g) Insert "complete" or "provisional" or "petty patent"

which is described in the accompanying (g) complete specification.

(Note: The following applies only to Convention applications)

Details of basic application(s)

(h) Insert number, country and filing date for the/or each basic application

	Application No.	Country	Filing Date
(h)	129,032	United States of America	4 December, 1987

Address for Service: PHILLIPS ORMONDE AND FITZPATRICK
Patent and Trade Mark Attorneys
367 Collins Street
Melbourne, Australia 3000

(i) Insert date of signing

Dated (i) 23 November, 1989

(j) Signature of applicant(s) (For body corporate see headnote*)

(k) Corporate seal if any

(k)

(j) PHILLIPS ORMONDE & FITZPATRICK
Attorneys for:
THE COCA COLA COMPANY

Note: No legalization or other witness required

PHILLIPS ORMONDE AND FITZPATRICK
Patent and Trade Mark Attorneys
367 Collins Street
Melbourne, Australia

P17/2/83

AUSTRALIA

Patents Act

DECLARATION FOR A PATENT APPLICATION

▼ **INSTRUCTIONS**
(a) Insert "Convention" if applicable
(b) Insert FULL name(s) of applicant(s)

In support of the (a) convention application made by
(b) THE COCA-COLA COMPANY

(c) Insert "of addition" if applicable
(d) Insert TITLE of invention

(hereinafter called "applicant(s)" for a patent (c) for an invention entitled (d) "CONVERTIBLE BEVERAGE DISPENSER"

(e) Insert FULL name(s) AND address(es) of declarant(s) (See headnote*)

I/~~We~~ (e) Robert A. Keller, Senior Vice-President and General Counsel for THE COCA-COLA COMPANY, 310 North Avenue, Atlanta, Georgia 30313 United States of America

do solemnly and sincerely declare as follows:

~~1. I am/We are the applicant(s).~~

(or, in the case of an application by a body corporate)

1. I am/~~We are~~ authorized to make this declaration on behalf of the applicant(~~s~~).

~~2. I am/We are the actual inventor(s) of the invention.~~

(or, where the applicant(s) is/are not the actual inventor(s))

2. (f)

(f) Insert FULL name(s) AND address(es) of actual inventor(s)

William S. Credle, Jr.
1763 East Gate Trail
Stone Mountain, Georgia 30087 United States of America

(g) Recite how applicant(s) derive(s) title from actual inventor(s) (See headnote**)

is/~~are~~ the actual inventor(~~s~~) of the invention and the facts upon which the applicant(~~s~~) is/~~are~~ entitled to make the application are as follows:

(g)

Applicant is the assignee of the invention from the actual inventor

(Note: Paragraphs 3 and 4 apply only to Convention applications)

(h) Insert country, filing date, and basic applicant(s) for the/or EACH basic application

3. The basic application(~~s~~) for patent or similar protection on which the application is based is/~~are~~ identified by **country, filing date, and basic applicant(s)** as follows:

(h)

United States of America
- December 4, 1987
William S. Credle, Jr.

4. The basic application(~~s~~) referred to in paragraph 3 hereof was/~~were~~ the first application(~~s~~) made in a Convention country in respect of the invention the subject of the application.

(k) Insert PLACE of signing

(l) Insert DATE of signing

(m) Signature(s) of declarant(s)

Note: No legalization or other witness required

Declared at (k) Atlanta, Georgia U.S.A.

Dated (l) November 3, 1988

(m) Robert A. Keller

Robert A. Keller, Senior Vice-President and General Counsel for THE COCA-COLA COMPANY

To: The Commissioner of Patents

P1C/7/78

PHILLIPS ORMONDE & FITZPATRICK
Patent and Trade Mark Attorneys
367 Collins Street
Melbourne, Australia

(12) PATENT ABRIDGMENT (11) Document No. AU-B-25197/88
(19) AUSTRALIAN PATENT OFFICE (10) Acceptance No. 618033

(54) Title
CONVERTIBLE BEVERAGE DISPENSER

International Patent Classification(s)
(51)[4] **B67D 001/06**
(51)[5] **F16K 001/52** **F16K 017/30** **F16K 027/02**
F16K 031/06

(21) Application No. : **25197/88** (22) Application Date : **16.11.88**

(30) Priority Data

(31) Number	(32) Date	(33) Country
129032	**04.12.87**	**US UNITED STATES OF AMERICA**

(43) Publication Date : **08.06.89**

(44) Publication Date of Accepted Application : **12.12.91**

(71) Applicant(s)
THE COCA COLA COMPANY

(72) Inventor(s)
WILLIAM S. CREDLE JR.

(74) Attorney or Agent
PHILLIPS ORMONDE & FITZPATRICK , 367 Collins Street, MELBOURNE VIC 3000

(56) Prior Art Documents
US 3853244

(57) Claim

1. A convertible postmix beverage dispenser including:

(a) a refrigeration module and a separate dispense module, said refrigeration module having a refrigeration module housing and said dispense module having a dispense module housing;

(b) removable connecting means for connecting said housings together to operate as a one-piece unit and for separating said housings from each other to operate as a two-piece unit;

(c) means for connecting a water line in said refrigeration module to a water line in said dispense module;

(d) means for connecting a syrup line in said refrigeration module to a syrup line in said dispense module;

(e) said refrigeration module including a refrigeration unit; and

(f) said dispense module including a dispensing valve and a dispensing nozzle for dispensing a beverage therefrom.

AUSTRALIA

Patents Act

618033

COMPLETE SPECIFICATION
(ORIGINAL)

Class Int. Class

Application Number:
Lodged:

Complete Specification Lodged:
Accepted:
Published:

Priority

Related Art:

APPLICANT'S REFERENCE: RC51652 (1433)

Name(s) of Applicant(s):

The Coca Cola Company

Address(es) of Applicant(s):

310 North Ryde Avenue NW,
Atlanta,
Georgia, 30313
UNITED STATES OF AMERICA.

AUSTRALIAN PATENT OFFICE Reg 76(3)

Address for Service is:

PHILLIPS ORMONDE & FITZPATRICK
Patent and Trade Mark Attorneys
367 Collins Street
Melbourne 3000 AUSTRALIA

Complete Specification for the invention entitled:

CONVERTIBLE BEVERAGE DISPENSER

Our Ref : 113250
POF Code: 78750/78750

The following statement is a full description of this invention, including the best method of performing it known to applicant(s):

This invention relates to counter top, postmix beverage dispensers, and in particular to a low-cost, compact, versatile, multiflavor, convertible beverage dispenser.

A wide variety of different postmix dispensers are known, including those having multiflavor valves and those having the selector buttons and nozzle at a notched corner of the cabinet. It is also known to have a dispensing system in which some parts of the dispenser are located above the counter and some parts are located below the counter.

It is an object of the present invention to provide a unitary beverage dispenser which can be placed entirely on top of a counter and oriented either frontways or sideways or which can be easily separated into a refrigeration module placed below the counter and a small dispense module placed on top of the counter.

According to one aspect of the present invention there is provided a convertible postmix beverage dispenser including:

(a) a refrigeration module and a separate dispense module, said refrigeration module having a refrigeration module housing and said dispense module having a dispense module housing;

(b) removable connecting means for connecting said housings together to operate as a one-piece unit and for separating said housings from each other to operate as a two-piece unit;

(c) means for connecting a water line in said refrigeration module to a water line in said dispense module;

(d) means for connecting a syrup line in said refrigeration module to a syrup line in said dispense module;

(e) said refrigeration module including a refrigeration unit; and

(f) said dispense module including a dispensing valve and a dispensing nozzle for dispensing a beverage therefrom.

AUSTRALIAN PATENT OFFICE

VF

According to another aspect of the present invention, there is provided a method for dispensing beverages including:

(a) providing a unitary, convertible beverage dispenser including a refrigeration module and a separate dispense module, said refrigeration module having a refrigeration module housing and said dispense module having a dispense module housing,

(b) connecting a water line in said refrigeration module to a water line in said dispense module;

(c) connecting a syrup line in said refrigeration module to a syrup line in said dispense module;

(d) providing a selector button and a dispensing valve in said dispense module;

(e) connecting said housings together when it is desired to operate said convertible dispenser as a one-piece countertop unit; and

(f) disconnecting said housings from each other when it is desired to operate said dispenser as a two-piece unit, placing said refrigeration module below said countertop and placing only said dispense module on top of said countertop.

The present invention will be more fully understood from the detailed description below when read in connection with the accompanying drawings wherein like reference numerals refer to like elements. It is to be understood that the present invention is not limited to the preferred embodiments as illustrated in the drawings.

Fig. 1 is a perspective view of the preferred embodiment of the convertible dispenser of the present invention set up in its "frontways" mode of operation;

Fig. 2 is a view identical to Fig. 1 but, with the dispenser set up in its "sideways" mode of operation;

Fig. 3 is a perspective view of the dispenser of Fig. 1 set up with only its narrow dispense module on top of the counter and with the refrigeration module beneath the counter;

Fig. 4 is an exploded, partly broken-away, perspective view of the dispenser of Fig. 1;

AUSTRALIAN PATENT OFFICE MPS

VF

Fig. 5 is a partly cross-sectional side view of the convertible dispenser of Fig. 1;

Fig. 6 is a partly cross-sectional, partial side view of the dispenser of Fig. 1;

MVS VF

Fig. 7 is a partly broken-away perspective view of the dispense module showing how it is converted to the Fig. 3 mode of operation;

Fig. 8 is a cross-sectional view through the flow control module of this invention;

Fig. 9 is a diagrammatic view showing the water connection when the dispense module is connected to the refrigeration module;

Fig. 10 is a diagrammatic view showing the water connection when the dispense module is separated from the refrigeration module;

Fig. 11 is a perspective view similar to Fig. 3 but of another embodiment that requires much less space;

Fig. 12 is a front view of the dispense module according to a still further embodiment of this invention.

SUMMARY OF THE INVENTION

A low cost, compact, versatile, multiflavor, postmix, convertible beverage dispenser which can be oriented in any one of several different ways to fit into any available space in an outlet. If an outlet has room for a dispenser, this dispenser will fit. This advantage can be used to reduce the inventory of different sizes of dispensers presently needed to accommodate different outlets.

This dispenser can be oriented frontways or sideways by an easy change in the location of the selector buttons. Alternatively, this unitary dispenser can be separated into a dispense module and a refrigeration module. The refrigeration module can be

AUSTRALIAN PATENT OFFICE

located below the counter and the dispense module can fit into a very small place on a counter.

This convertible dispenser can be used with figals or can be used with bag-in-box with built-in syrup pumps. In addition, this convertible dispenser can be easily modified to dispense different numbers of beverages.

DETAILED DESCRIPTION OF THE PREFERRED EMBODIMENTS

With reference now to the drawings, Figs. 1-10 show the preferred embodiment of the convertible beverage dispenser 10 of the present invention.

The dispenser 10 includes a refrigeration module 12 and a separate dispense module 14 which is removably attached to the refrigeration module. In the preferred embodiment shown, the dispenser 10 has a single multiflavor valve 16 with a single mixing and dispensing nozzle 18 for dispensing a beverage into a cup 19 (Fig. 7), four selector buttons 20, one carbonated water line 22 and four syrup lines 24. The dispensing valve 16 is in a notched corner of the dispenser 10 with the buttons on either of the adjacent walls.

The dispenser 10 as shown in the drawings is set up for use with bag-in-box syrup containers (not shown), although it can also be used with figals (not shown).

The dispenser 10 can be set up for operation on a countertop 11 (see Fig. 3) in any one of the three modes of operation shown in Figs. 1, 2 or 3. To convert between the modes shown in Figs. 1 and 2, it is only necessary to move the buttons 20 to change places with the panel 96. To convert from either the Fig. 1

AUSTRALIAN PATENT OFFICE

or 2 mode to the Fig. 3 mode, a small conversion kit is used. The dispense module 14 is separated from the refrigeration module 12 and slightly rearranged (Fig. 7), the longer water and syrup lines are attached, a different splash plate (flat instead of L-shaped) is attached, and preferably a recirculating pump 134 and line are connected.

The refrigeration module 12 includes a housing 26, a lid 28, an ice-water tank 30, a refrigeration unit 32, a carbonator unit 34, and four syrup pumps 36 mounted on the sidewall 38.

The refrigeration unit 32 is mounted on a refrigeration deck 40 that sits on top of the tank 30. The unit 32 includes the usual equipment such as an evaporator coil 42, an agitator 44, condenser coils 46, compressor 48, ice bank control 50, and cooling fan 52 operated by an agitator motor 54,

The carbonator unit 34 is mounted on a carbonator deck 56 and includes the usual carbonator equipment including a carbonator tank 58, a water pump and motor 60, level controller 62, and CO_2 inlet 64.

The refrigeration module 12 also includes the usual water cooling coils 66 and four separate syrup cooling coils 68. The water goes to the pump 60, then to the water cooling coils 66, then to the carbonator tank 58 and then to the multiflavor valve 16. The syrup goes from a bag-in-box container (not shown) to one of the four syrup pumps 36, to a syrup cooling coil 68, and then to the multiflavor valve 16. Each pump 36 has a CO_2 inlet, a syrup inlet and a syrup outlet, for example, for a CO_2 operated pump.

The dispense module 14 has a longer sidewall and shorter frontwall and includes a dispense module housing 69, a dispense section 70, a separate hollow

section 72, and a lid 74. The hollow section 72 is generally U-shaped with an opening 76 in its rear wall 78 to accommodate the syrup pumps 36, in the modes of operation shown in Figs. 1 and 2. The hollow section 72 is attached by bolts and nuts 80 to the refrigeration module housing 26.

The dispense section 70 includes separate upper and lower portions 82 and 84, respectively, and an L-shaped splash guard 88 in Figs. 1 and 2, and a flat splash guard 90 in Fig. 3. The lower portion 84 is the drip tray 86 which, in Figs. 1 and 2, is preferably connected to the hollow section 72 and not to the refrigeration module 12.

The upper portion 82 includes a shell 92 having an open top 93 and an open rear wall 94. The shell 92 is bolted to both the refrigeration module housing 26 and to the hollow section 72 by bolts and nuts 80.

The upper portion 82 includes the selector buttons 20, a panel 96, and the single multiflavor valve 16. In the arrangement of Fig. 1 when the dispenser 10 is arranged frontways, the selector buttons 20 are placed in an opening 100 in a frontwall 98 of the dispense module 14, and the panel 96 is placed in an opening 102 in the sidewall 104. In the mode of operation shown in Fig. 2, the selector buttons 20 are placed in the sidewall opening 102 and the panel 96 is placed in the frontwall opening 100. In the separated arrangement of Fig. 3, the selector buttons 20 are placed in the sidewall opening 102 as in Fig. 2.

The manner of changing the selector buttons 20 and panel 96 will now be described. The openings 100 and 102 are identical in size and the buttons and panel can be handled through the open top 93 (with the lid 74

off). Each of the panel and buttons are connected to an identical mounting plate 106, so a description of one will suffice. The plate 106 has a flange 108 along its bottom edge that fits in a groove, and the plate has a single slot 105 centrally located in its top edge to receive a bolt 107 connected to the wall and on which a wing nut 109 is attached. The wires from the solenoids of the flow control modules 110 to the buttons 20 are flexible and easily allow movement of the buttons from one wall to the other.

The multiflavor valve 16 will now be described. The valve 16 includes the single nozzle 18 and a plurality of separate, identical flow control modules 110, shown in Fig. 10. One of the flow control modules 110 is for carbonated water an there are four separate syrup modules 110, one for each of four syrups. A water line 112 extends from the water flow control module 110 to a central opening in the nozzle 18, while the four syrup lines 111, 112, 113, and 114 extend from a respective one of the flow control modules 110 to a respective one of the circumferentially arranged openings 116 in the top of the nozzle 18.

Referring to Fig. 8, each of the flow control modules 110 includes a body 120 and a liquid passageway 122 therethrough from an inlet port 124 to an outlet port 126. A standard piston-spring flow control 128 is located in the passage. A solenoid controlled valve 130 (including a solenoid, an armature, and a valve element movable onto and off of a valve seat) controls the on-off flow through the module 110. An advantage of this module is the fact that the inlet and outlet ports are on opposite faces

and have passageways whose axes are parallel, to provide ease of installation.

The operation of the two arrangements shown in Figs. 1 and 2 will thus be clear from the above description. If only a very small countertop space is available, then the dispenser 10 can be converted to a two-piece unit shown in Fig. 3 with only the very narrow dispense module placed on top of the countertop 11.

This conversion from a one to two-piece unit can be easily done in the field with the aid of a small break-away conversion kit containing the long water and syrup lines 132, a recirculating water pump 134 to be mounted on the refrigerator module housing 26, and a flat splash plate 90. To do the conversion, the lids are removed, the bolts and nuts 80 are removed, the recirculating water pump 134 is mounted on the housing 26, and the lines 132 are installed. In addition, the two sections 70 and 72 of the dispense unit are disconnected and then re-connected, using bolts and nuts 80 as shown in Fig. 10. In this way, the openings in their rear walls are facing each other and the dispense module has a smooth, clean, exterior surface. The drip tray is not connected to the shell 92, but it is connected to a drip tray support that is connected to the hollow section 72 and that extends under both sections 70 and 72 of the dispense module as shown in Figs. 1 and 2. This support is disconnected from the hollow section 70 and then reconnected to extend under the drip tray in Fig. 3.

Fig. 9 shows the standard set up for the water line for the Figs. 1 and 2 modes of operation, and Fig. 10 shows the additional recirculating water line

set up for the Fig. 3 mode of operation. This provides cold water for the dispenser at all times.

Fig. 11 shows a dispense module 140 according to another embodiment of this invention similar to Fig. 3 except that the hollow section 72 is replaced (along with a different lid and drip tray support) with a different hollow section 142 having much less depth than does section 72. This embodiment would be used where only a very small countertop space is available.

Fig. 12 shows another embodiment of this invention wherein the upper portion 82 of the dispense section 70 of the dispense module 14 is used by itself, by connecting it above a sink, such as under an existing cabinet (it can alternatively be wall mounted).

While the preferred embodiment of this invention has been described above in detail, it is to be understood that variations and modifications can be made therein without departing from the spirit and scope of the present invention. For example, while the preferred embodiment described above uses a multiflavor valve, this is not essential; it can alternatively use separate dispensing valves for each beverage or any combination of multiflavor and separate valves. In addition, while the preferred embodiment has been described for use with bag-in-box, it can also be used with figals, in which case the syrup pumps would not be included. The dispenser has been described for use with four separate syrups; this number can easily be changed by changing the number of flow control modules and syrup cooling coils. Other types and arrangements of the selector buttons can also be used. Instead of moving the buttons in switching between the Figs. 1 and 2 arrangements, buttons can be located permanently in both places, with a cover over the ones not being used.

TRB0394J.

As used herein, the term "convertible" means a dispenser that can be converted in size and shape to fit in different available spaces. In addition, when converting to the Fig. 3 mode, or preferably to the Fig. 11 mode, the hollow section 142 can be part of the dispense section with a hollow section like 72 left connected to the refrigeration module. Also, the long lines can be stored in the hollow section 72. This would make the conversion easier and could avoid the need for a conversion kit.

THE CLAIMS DEFINING THE INVENTION ARE AS FOLLOWS:

1. A convertible postmix beverage dispenser including:

(a) a refrigeration module and a separate dispense module, said refrigeration module having a refrigeration module housing and said dispense module having a dispense module housing;

(b) removable connecting means for connecting said housings together to operate as a one-piece unit and for separating said housings from each other to operate as a two-piece unit;

(c) means for connecting a water line in said refrigeration module to a water line in said dispense module;

(d) means for connecting a syrup line in said refrigeration module to a syrup line in said dispense module;

(e) said refrigeration module including a refrigeration unit; and

(f) said dispense module including a dispensing valve and a dispensing nozzle for dispensing a beverage therefrom.

2. The apparatus as recited in claim 1 wherein said housings are separated and wherein said water line connecting means and said syrup line connecting means are long, flexible lines such that said refrigeration module can be placed below a counter and said dispense module can be placed above said counter.

3. The apparatus as recited in claim 1 wherein said syrup line connecting means includes a plurality of syrup lines, and wherein said dispense module includes a plurality of selector buttons.

4. The apparatus as recited in claim 1 wherein said syrup line connecting means includes a plurality of

AUSTRALIAN PATENT OFFICE MB

syrup lines, and wherein said dispensing valve is a multiflavor valve.

5. The apparatus as recited in claim 4 wherein said multiflavor valve includes a single mixing nozzle and a plurality of separate flow control modules, each flow control module including a solenoid controlled on-off valve and a flow control.

6. The apparatus as recited in claim 1 wherein said housings are removably connected together and said water line and syrup line connecting means are mating fittings on the respective water and syrup lines in the refrigeration and dispense modules.

7. The apparatus as recited in ~~claim 1~~ any preceding claim wherein said refrigeration module includes a built-in syrup pump.

8. The apparatus as recited in claim 7 including a plurality of said built-in syrup pumps.

9. The apparatus as recited in ~~claim 1~~ any preceding claim wherein said dispense module includes a dispense section and a hollow section, said sections each having a rear wall facing said refrigeration module when said housings are connected together, said rear walls having openings therein and means for connecting said sections together with said rear walls facing each other when said housings are separated, whereby said openings are hidden in said separated dispense module.

10. The apparatus as recited in claim 3 including means for changing the number of selector buttons and syrup lines.

11. The apparatus as recited in claim 1 wherein said dispense module includes a longer sidewall and a shorter frontwall, and including means for locating ~~said~~ a selector button on either said sidewall or said frontwall.

AUSTRALIAN PATENT OFFICE MB

12. The apparatus as recited in claim 11 including a plurality of said selector buttons.

13. A method for dispensing beverages ~~comprising:~~ including:

(a) providing a unitary, convertible beverage dispenser including a refrigeration module and a separate dispense module, said refrigeration module having a refrigeration module housing and said dispense module having a dispense module housing,

(b) connecting a water line in said refrigeration module to a water line in said dispense module;

(c) connecting a syrup line in said refrigeration module to a syrup line in said dispense module;

(d) providing a selector button and a dispensing valve in said dispense module;

(e) connecting said housings together when it is desired to operate said convertible dispenser as a one-piece countertop unit; and

(f) disconnecting said housings from each other when it is desired to operate said dispenser as a two-piece unit, placing said refrigeration module below said countertop and placing only said dispense module on top of said countertop.

14. The method as recited in claim 13 wherein said dispenser has a notched corner dispensing station and wherein said dispenser has a longer frontwall and a narrower sidewall, and wherein said housings are connected together and said selector buttons are on said frontwall adjacent said notched corner dispensing station, and including the step of moving said dispenser to face sideways on said countertop and moving said selector buttons from said frontwall to said sidewall.

15. The method as recited in claim 13 wherein said dispense module includes a dispense section and a

AUSTRALIAN PATENT OFFICE MB

separate hollow section, said sections each having a rear wall facing said refrigeration module when said housings are connected together and said rear walls having openings therein, and including the step of connecting said sections together with their rear walls facing each other when said housings are separated, whereby said openings are hidden.

16. The method as recited in claim 13 wherein said dispensing valve is a multiflavor valve including a single mixing nozzle and a plurality of separate flow control modules, each flow control module including a solenoid controlled on-off valve and a flow control, and including the step of changing the number of beverages to be dispensed by changing the number of said flow control modules in said dispense module.

17. The apparatus as recited in claim 5 wherein each flow control module includes:

(a) a body having a liquid flow passageway therethrough from an inlet port to an outlet port;

(b) a flow control chamber in said body with a piston-spring flow control element therein, said chamber having an inlet and an outlet in said passageway;

(c) a control valve chamber in said body in fluid communication with said passageway, a valve element adapted to seat on a valve seat, and a solenoid mounted on said body and having an armature connected to said valve element, for controlling the on-off flow through said flow control module; and

(d) said inlet port and outlet port being on opposite faces of said body and having parallel axes.

18. The apparatus as recited in any one of claims 1 to 12 wherein said refrigeration module includes a carbonation unit.

19. The apparatus as recited in claim 1 wherein said dispense module includes manual means for activating said dispensing valve to dispense a beverage.

20. The apparatus as recited in claim 19 wherein said manual means includes a selector button.

21. A convertible postmix beverage dispenser

substantially as hereinbefore described with respect to any one of the embodiments as shown in the accompanying drawings.

22. A method for dispensing beverages substantially as hereinbefore described with respect to any one of the embodiments as shown in the accompanying drawings.

DATED: 31 May 1991

PHILLIPS ORMONDE & FITZPATRICK
Attorneys for:
THE COCA-COLA COMPANY

David B Fitzpatrick

39 0409b

MVS VF

FIG 1

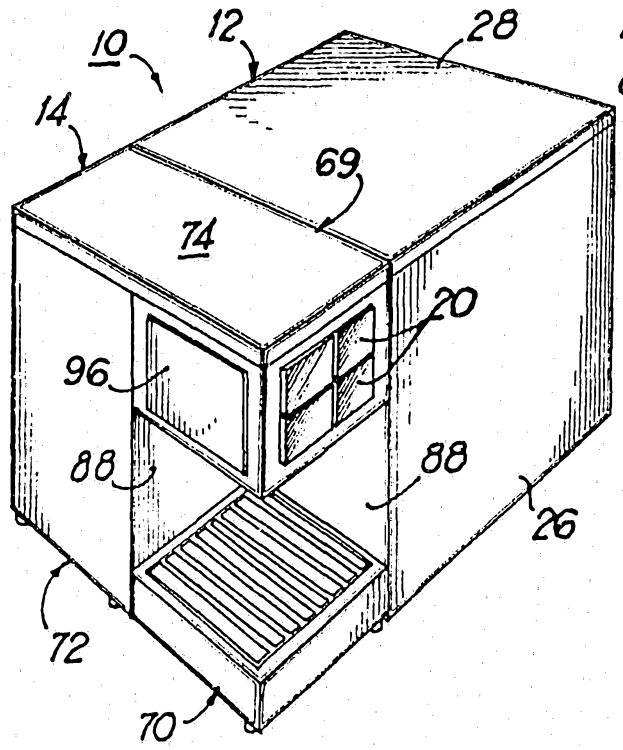

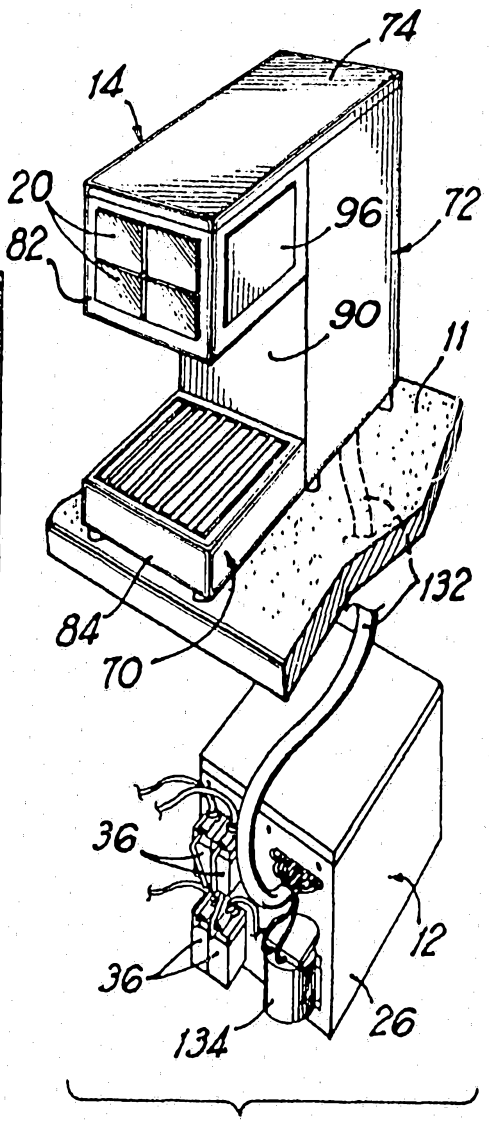

FIG 3

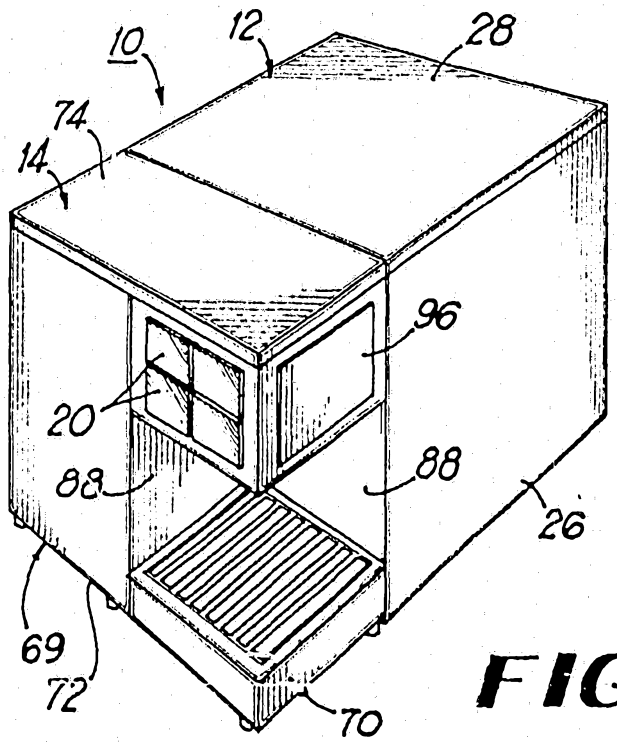

FIG 2

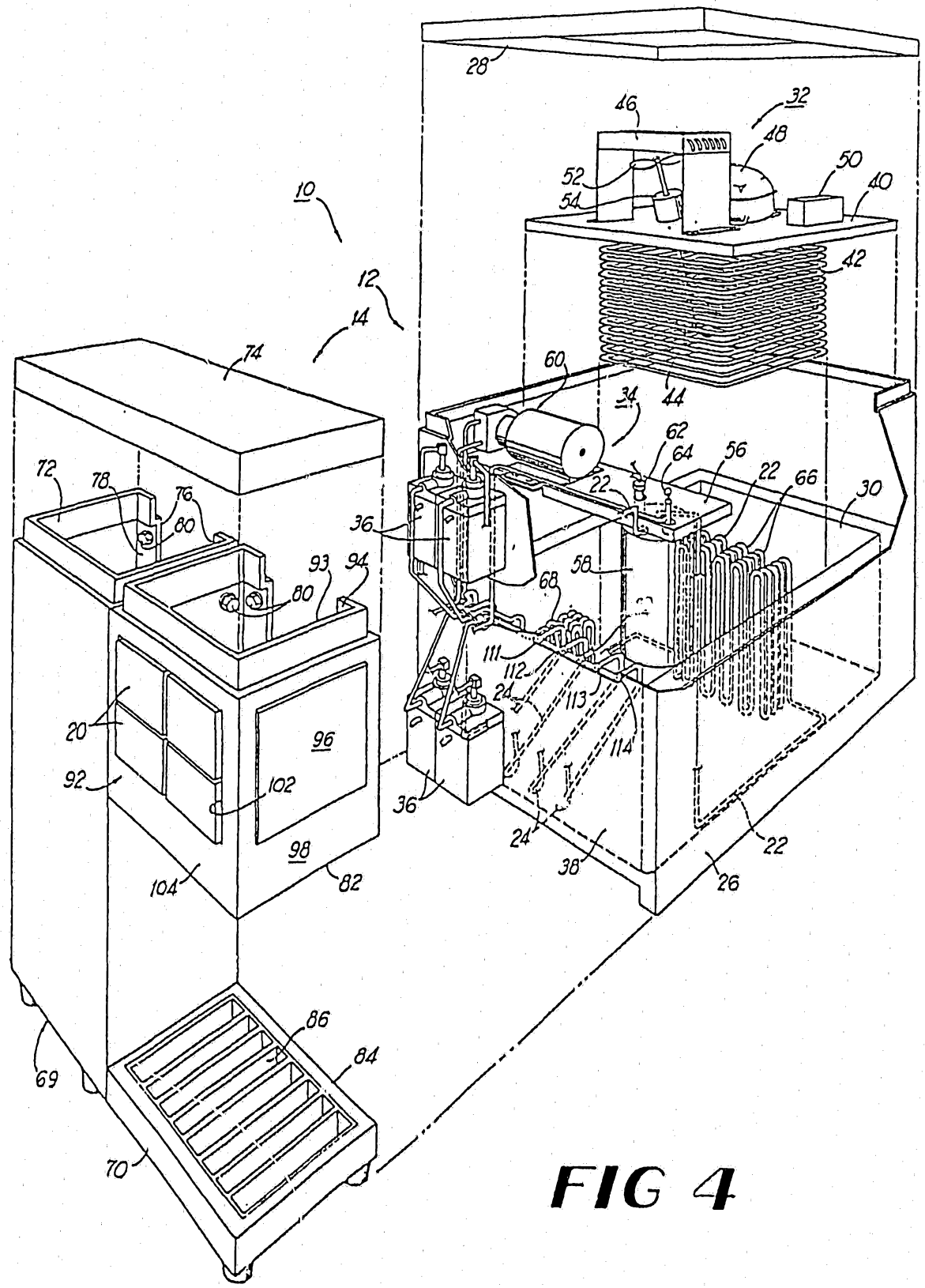
10
12
14
28
46
32
48
50
52
54
40
42
74
60
34
44
62
64
56
22
66
30
72
78
76
80
36
93
94
80
58
68
111
112
24
113
114
20
96
92
102
98
104
82
36
24
38
22
26
86
84
69
70

FIG 4

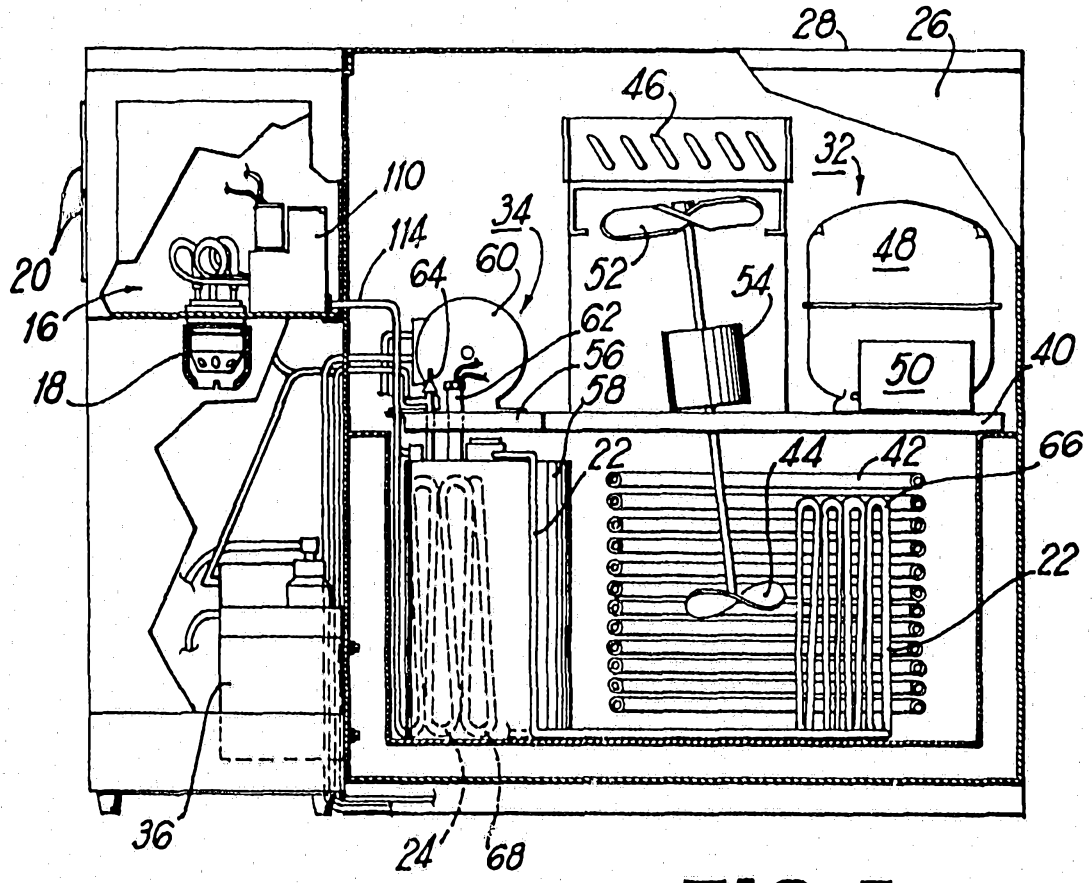
28
26
46
32
110
34
114
48
20
64
60
52
54
16
62
56
50
40
18
58
22
44
42
66
22
36
24
68

FIG 5

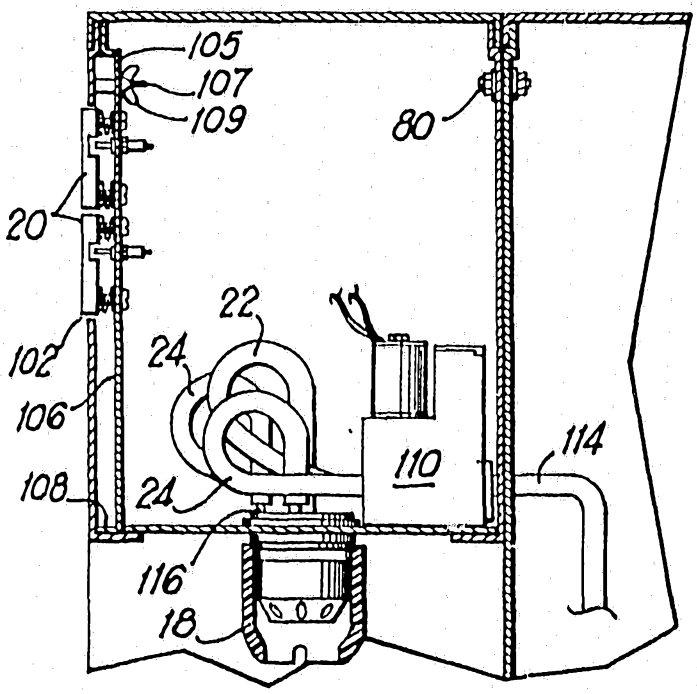
105
107
109
80
20
22
102
24
106
110
114
108
24
116
18

FIG 6

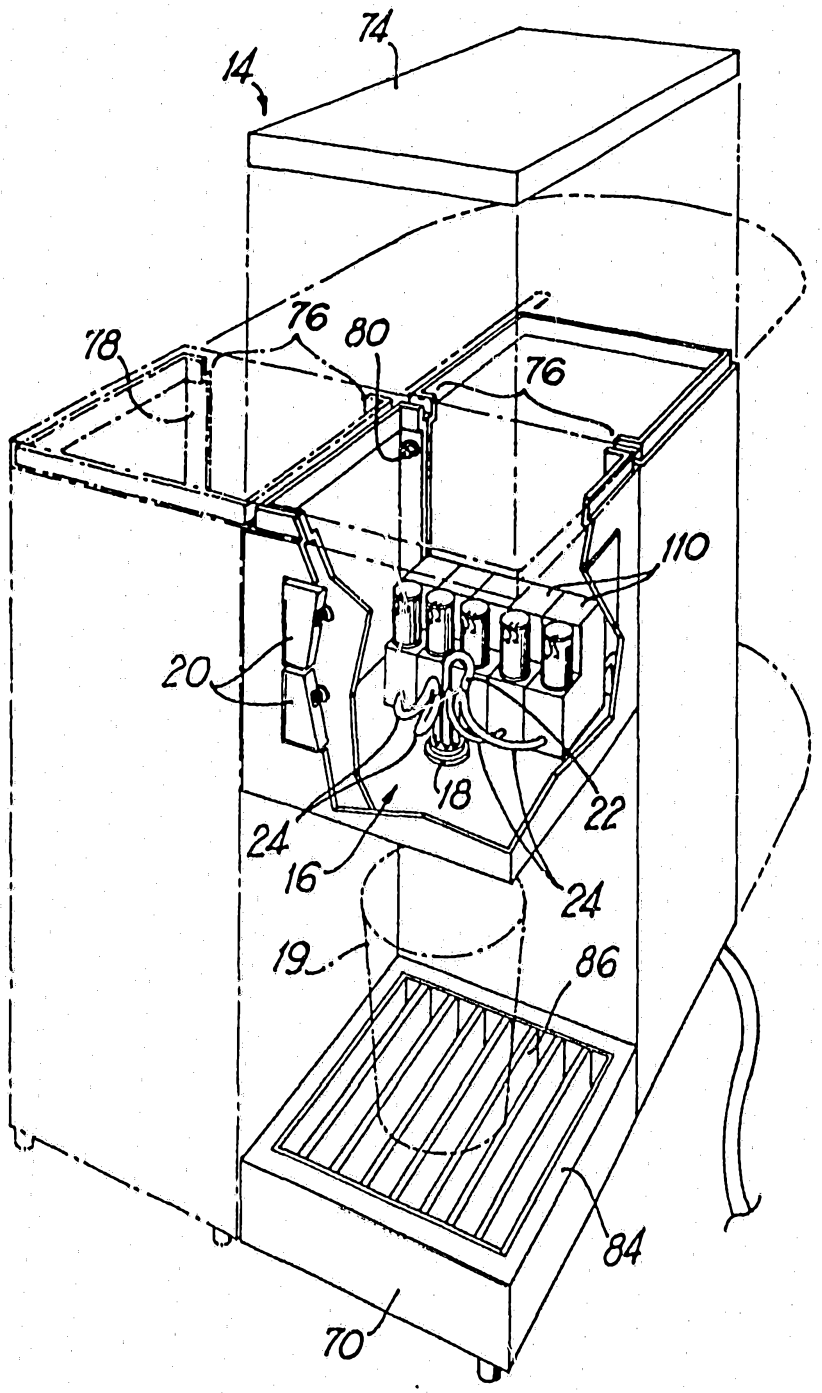

FIG 7

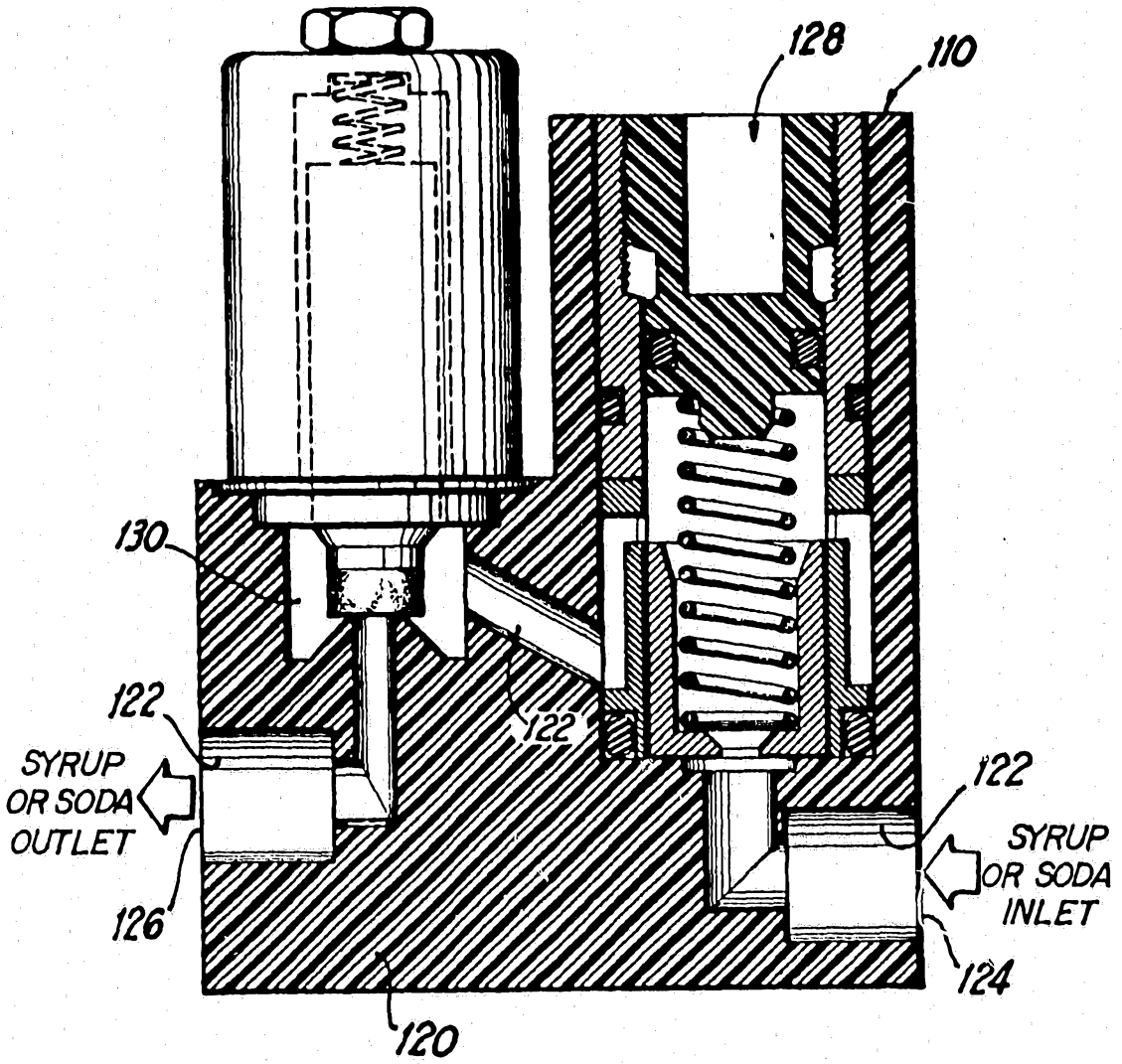
128
110
130
122
122
SYRUP
OR SODA
OUTLET
122
SYRUP
OR SODA
INLET
126
124
120

FIG 8

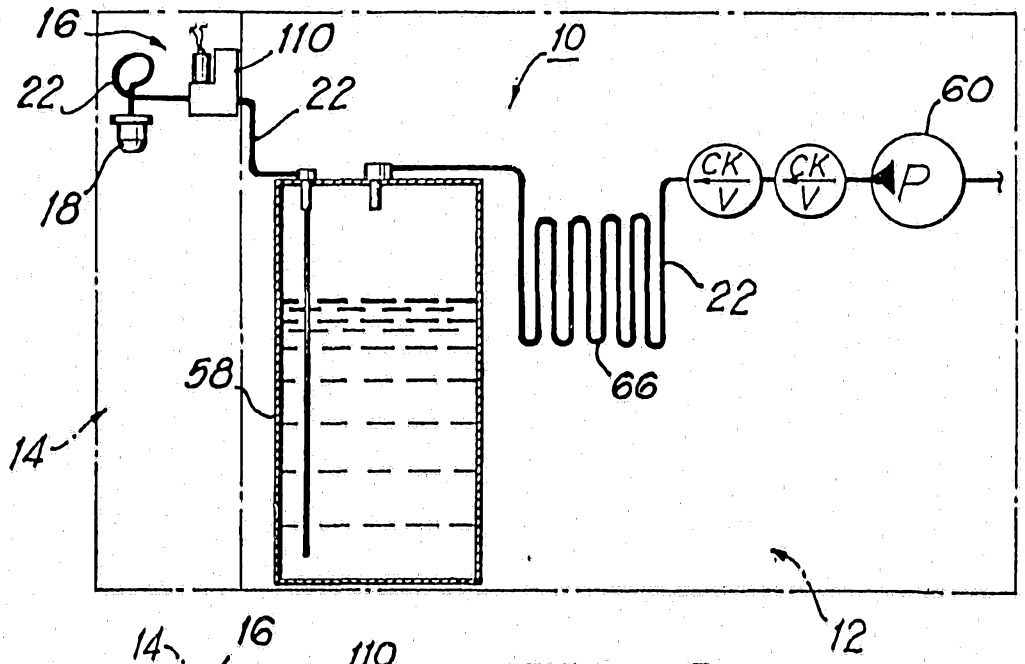
16
110
10
22
22
60
CK
V
CK
V
P
18
22
58
66
14
12

FIG 9

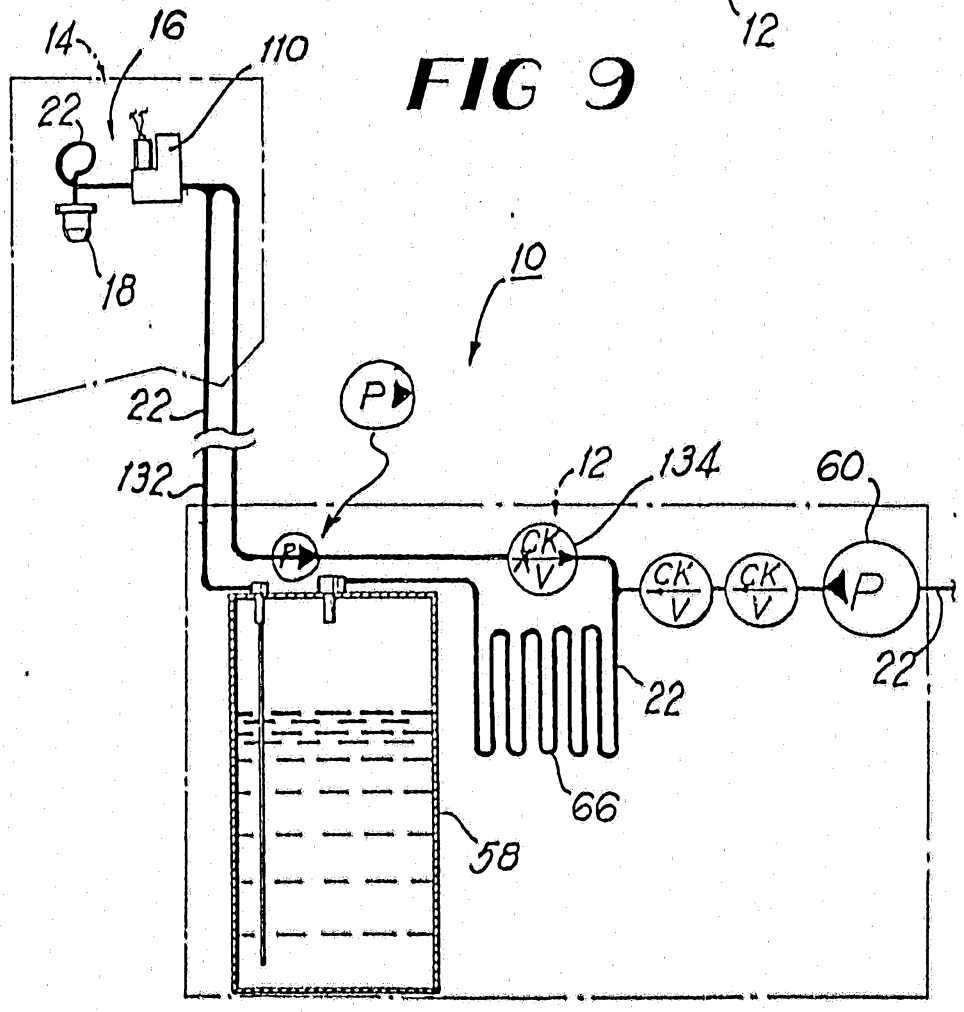
14
16
110
22
10
18
P
22
132
12
134
60
P
CK
V
CK
V
CK
V
P
22
22
66
58

FIG 10

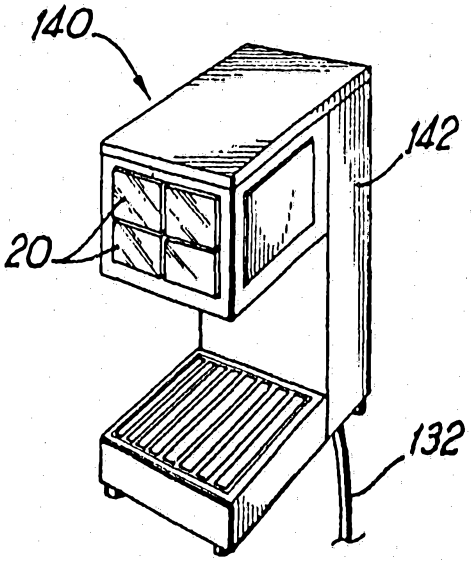

FIG 11

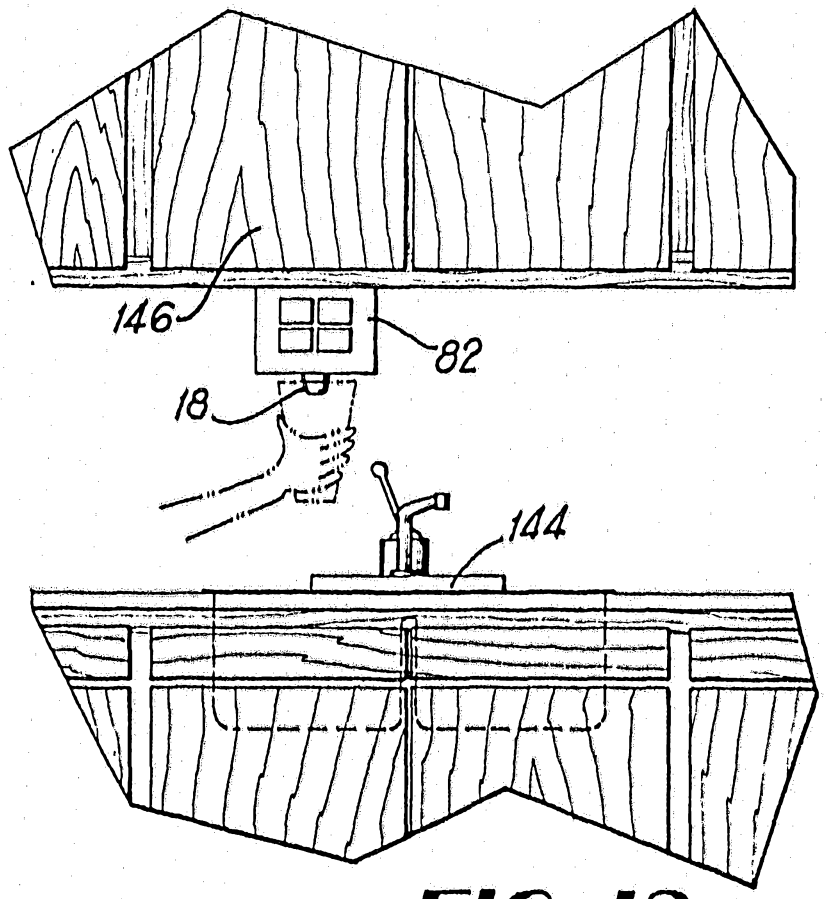

FIG 12