LA VERNE W. NOYES.

ENGINE.

APPLICATION FILED DEC. 23, 1908.

929,695.

Patented Aug. 3, 1909.

2 SHEETS—SHEET 1.

FIG. 2.

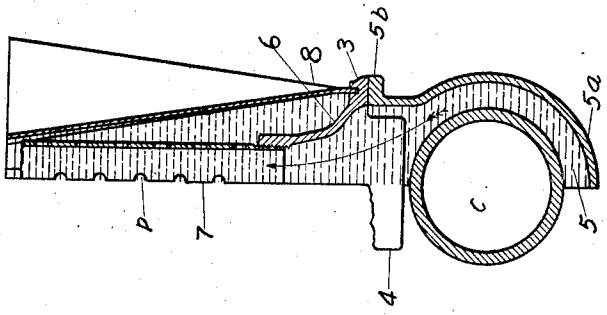

FIG. 3.

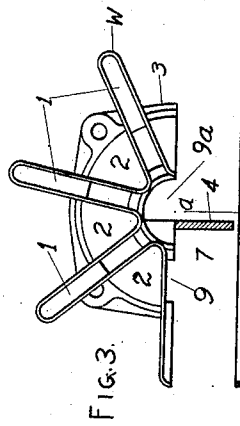

FIG. 1.

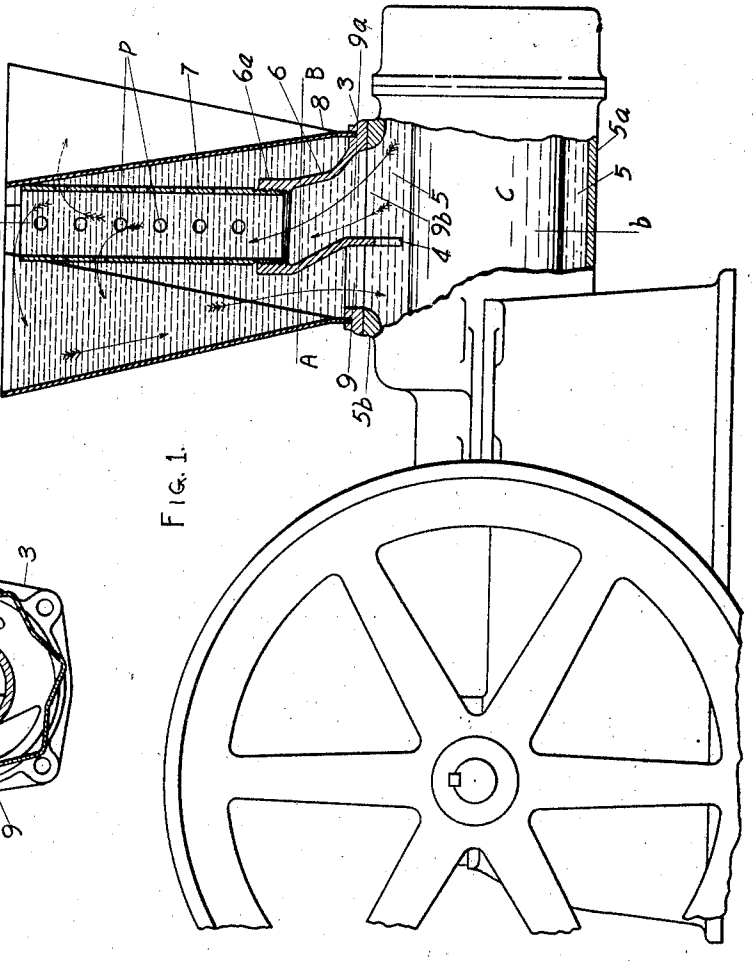

FIG. 4.

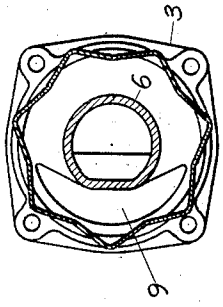

WITNESSES

Daniel R. Scholes

L. C. Walker

INVENTOR

LaVerne W. Noyes

LA VERNE W. NOYES.

ENGINE.

APPLICATION FILED DEC. 23, 1908.

929,695.

Patented Aug. 3, 1909.

2 SHEETS—SHEET 2.

FIG. 6

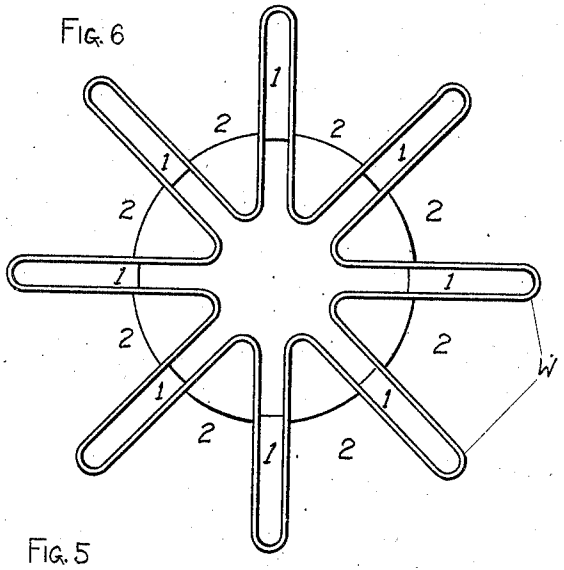

FIG. 5

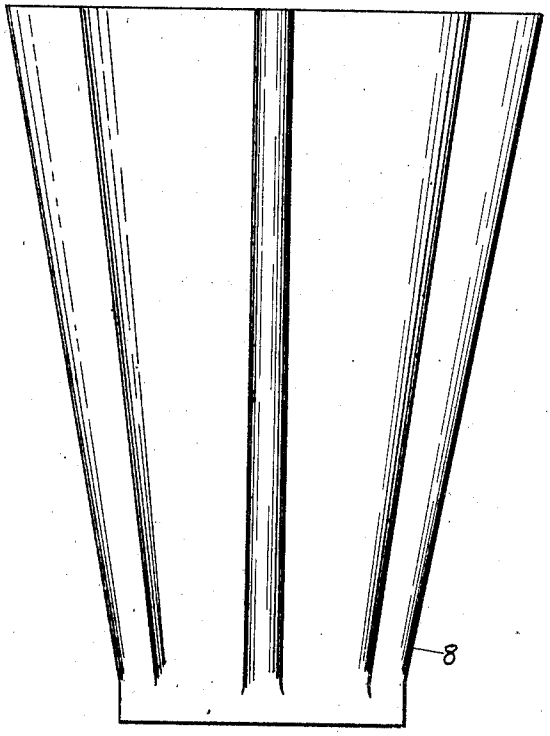

FIG. 8

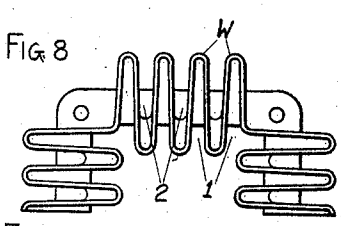

FIG. 7

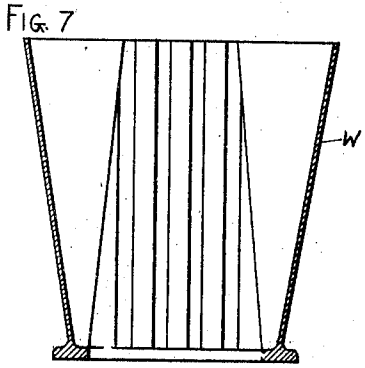

WITNESSES

Daniel R. Scholes

L. C. Walker.

INVENTOR

La Verne W. Noyes

UNITED STATES PATENT OFFICE.

LA VERNE W. NOYES, OF CHICAGO, ILLINOIS.

ENGINE.

No. 929,695. Specification of Letters Patent. Patented Aug. 3, 1909.

Application filed December 23, 1908. Serial No. 468,900.

To all whom it may concern:

Be it known that I, LA VERNE W. NOYES, a citizen of the United States, residing at Chicago, in the county of Cook, in the State of Illinois, have invented certain new and useful Improvements in Engines, which are of particular use in connection with internal-combustion engines, commonly known as "gas-engines;" and I do declare the following to be a full, clear, and exact description of the invention, such as will enable others skilled in the art to which it appertains to make and use the same, reference being had to the accompanying drawings, and to the letters and figures of reference marked thereon, which form a part of this specification.

My invention relates more particularly to those engines employing cooling jackets for the engine cylinders, which cylinders, in the case of gas engines, are likely to become highly heated as a consequence of the combustion of explosive mixtures, unless effective means are employed to cool the cylinders.

The object of my invention is to provide improved means for rapidly dissipating, or removing, from the cooling liquid in the jacket, the heat absorbed by the liquid from the engine cylinders, whereby the quantity, and hence the weight, of the cooling liquid necessary to maintain the cylinders at proper and safe working temperatures, is reduced. The cooling liquid which I preferably employ is water, because of its effectiveness and cheapness.

My invention may generally be described as comprising an engine having an operating cylinder provided with a liquid-containing jacket and an overlying radiator projecting upwardly from said jacket which lies beneath the radiator and having a main passage extending longitudinally of the radiator upwardly from the jacket, and which main passage communicates with the interior of the jacket, the wall of said radiator being formed in convolutions that define supplemental passages communicating with the main passage and also extending longitudinally of the radiator upwardly from the jacket. By this construction, the liquid heated by the cylinder will readily rise and quickly replace the upper liquid which has had opportunity to cool and which may readily descend to replace the risen liquid.

I will explain my invention more particularly by reference to the accompanying drawings, showing two embodiments thereof, and in which—

Figure 1 is a side elevation, partly sectional, of a gas engine embodying the invention. Fig. 2 is an end sectional elevation on line *a*—*b* of Fig. 1. Fig. 3 is a top plan view of the radiator as shown in Fig. 1. Fig. 4 is a plan section on line A—B of Fig. 1. Fig. 5 is an elevation of the radiator shown in Figs. 1 to 4, inclusive, as made of sheet metal. Fig. 6 is a top plan view of the radiator shown in Fig. 5. Fig. 7 is a vertical section of the radiator as made of cast metal. Fig. 8 is a top plan view of the structure shown in Fig. 7.

Like parts are indicated by similar characters of reference throughout the different figures.

The engine cylinder C is surrounded by a water jacket 5^a which has a relatively large opening 9^b above the cylinder. The jacket flange 5^b surrounds the outlet opening 9^b, to which flange is secured a flange 3 that is provided with an inlet 9 and an upwardly extending tapering riser portion 6 having an inlet opening 9^a and whose upper end 6^a is threaded, the openings 9 and 9^a communicating with the relatively large opening 9^b. A second riser or pipe portion 7 is screwed into the threaded part 6^a of the riser portion 6. Surrounding this pipe 7 and suitably secured to the flange 3, is a water receptacle 8, projecting upwardly from said jacket which lies beneath said receptacle, said receptacle having a main central passage extending longitudinally of the receptacle upwardly from the jacket, and which main passage communicates with the interior of the jacket. The wall of the receptacle 8 is formed in convolutions to constitute said receptacle a radiator, said convolutions defining supplemental passages communicating with the main passage and also extending longitudinally of the radiator upwardly from the jacket. As shown, the convolutions form radial, vertically extending, hollow wings, or troughs, W, the supplemental passages or hollows 1 of these wings communicating with the said main passage, and, in fact, forming extensions of it, said main and supplemental passages forming extensions of the jacketed water space surrounding the cylinder. Between the wings W are verti-

cal air-passage ways 2. A deflector 4, whose purpose will appear, forms a continuation of the partition between the openings 9 and 9^a and extends downwardly into the jacket.

The water surrounding those portions of the cylinder in which the combustion takes place, becoming heated, rises through the inlet 9^a to replace the relatively cooler water, particularly the water contained in the hollow wings, the water rising and descending as indicated in part by the arrows. The rising heated water flows through the riser 6, 7, and the descending cooled water flows through the inlet 9 back to the jacket interior. The deflector 4 assists in directing the heated water into the inlet 9^a, this deflector being of particular utility when the engine tends to vibrate or shake, which tendency is especially pronounced when the engine is portable.

The rising heated water will flow through the top of the riser 6, 7 and also through the perforations *p*, that are preferably formed in the riser along its length, the heated water, after passing from the riser, finding its way into the hollow wings, where it becomes cooled off rapidly because of the large area of heat conducting and radiating surface afforded by these wings. The perforations *p* in the riser portion 7 serve to permit the heated water to escape from the riser under circumstances where the water would not be capable of escaping through the top of the riser, as when the water becomes reduced in volume, owing to evaporation and leakage. As the metal forming the sides of these wings becomes heated by the water, the air in the air-passage ways between the wings and upon the exterior of the radiator, will become heated and rise, being replaced by cooler air. A continuous flow of air between the wings W is thus established, rapidly carrying away the heat imparted to the wings by the water. Thus the water becomes rapidly cooled, the cooled water flowing downward into the jacket 5, again to absorb heat from the cylinder to cool the cylinder. Because of the rapid cooling of the water by reason of the large area of conducting and radiating surface afforded by the hollow wings W, and the induced currents of cooling air between the wings, which rapidly absorb and conduct the heat away, the circulation of the cooling water will be very rapid, enabling the cylinder to be cooled to a proper and safe working temperature with a small quantity of water.

I prefer to make the winged part of the radiator of sheet metal, tapering downwardly, as shown in Figs. 1; 2, 3, 4, 5 and 6, as the best results are thereby secured. If desired, the radiator may be cast as shown in Figs. 7 and 8.

I claim:—

1. An engine having an operating cylinder provided with a liquid-containing jacket and a radiator projecting upwardly from said jacket and having a main passage extending longitudinally of the radiator upwardly from the jacket and which main passage communicates with the interior of the jacket, the wall which defines said main passage of said radiator being formed in convolutions that define supplemental passages communicating with the main passage and also extending longitudinally of the radiator upwardly from the jacket.

2. An engine having an operating cylinder provided with a liquid-containing jacket and a radiator projecting upwardly from said jacket, said radiator tapering downwardly and having a main passage extending longitudinally of the radiator upwardly from the jacket and which main passage communicates with the interior of the jacket, the wall which defines said main passage of said radiator being formed in convolutions that define supplemental passages communicating with the main passage and also extending longitudinally of the radiator upwardly from the jacket.

3. An engine having an operating cylinder provided with a liquid-containing jacket and a radiator projecting upwardly from said jacket and having a main passage extending longitudinally of the radiator upwardly from the jacket and which main passage communicates with the interior of the jacket, the wall which defines said main passage of said radiator being formed in convolutions that define supplemental passages communicating with the main passage and also extending longitudinally of the radiator upwardly from the jacket, and means for directing the liquid heated by the cylinder upwardly from the jacket and directing the return of the liquid when cooled, to the jacket.

4. An engine having an operating cylinder provided with a liquid-containing jacket and a radiator projecting upwardly from said jacket, said radiator tapering downwardly and having a main passage extending longitudinally of the radiator upwardly from the jacket and which main passage communicates with the interior of the jacket, the wall which defines said main passage of said radiator being formed in convolutions that define supplemental passages communicating with the main passage and also extending longitudinally of the radiator upwardly from the jacket, and means for directing the liquid heated by the cylinder upwardly from the jacket and directing the return of the liquid when cooled, to the jacket.

5. An engine having an operating cylinder provided with a liquid-containing jacket and a radiator projecting upwardly from said jacket and having a main passage extending longitudinally of the radiator up-

wardly from the jacket and which main passage communicates with the interior of the jacket, the wall which defines said main passage of said radiator being formed in convolutions that define supplemental passages communicating with the main passage and also extending longitudinally of the radiator upwardly from the jacket, and a riser limited to free communication at one end with one portion of the jacket interior and having communication at its other end with the other portion of the jacket interior by way of the supplemental passages.

6. An engine having an operating cylinder provided with a liquid-containing jacket and a radiator projecting upwardly from said jacket, said radiator tapering downwardly and having a main passage extending longitudinally of the radiator upwardly from the jacket and which main passage communicates with the interior of the jacket, the wall which defines said main passage of said radiator being formed in convolutions that define supplemental passages communicating with the main passage and also extending longitudinally of the radiator upwardly from the jacket, and a riser limited to free communication at one end with one portion of the jacket interior and having communication at its other end with the other portion of the jacket interior by way of the supplemental passages.

7. An engine having an operating cylinder provided with a liquid-containing jacket and a radiator projecting upwardly from said jacket and having a main passage extending longitudinally of the radiator upwardly from the jacket and which main passage communicates with the interior of the jacket, the wall which defines said main passage of said radiator being formed in convolutions that define supplemental passages communicating with the main passage and also extending longitudinally of the radiator upwardly from the jacket, and a riser limited to free communication at one end with one portion of the jacket interior and having communication along its length with the other portion of the jacket interior by way of the supplemental passages.

8. An engine having an operating cylinder provided with a liquid-containing jacket and a radiator projecting upwardly from said jacket, said radiator tapering downwardly and having a main passage extending longitudinally of the radiator upwardly from the jacket and which main passage communicates with the interior of the jacket, the wall which defines said main passage of said radiator being formed in convolutions that define supplemental passages communicating with the main passage and also extending longitudinally of the radiator upwardly from the jacket, and a riser limited to free communication at one end with one portion of the jacket interior and having communication along its length with the other portion of the jacket interior by way of the supplemental passages.

In testimony whereof I have signed my name to this specification in the presence of two subscribing witnesses.

LA VERNE W. NOYES.

Witnesses:
DANIEL R. SCHOLES,
L. C. WALKER.