Dec. 27, 1938. H. DÖHLE 2,141,463

TELEPHONE METERING SYSTEM

Filed Nov. 2, 1935

FIG. 1

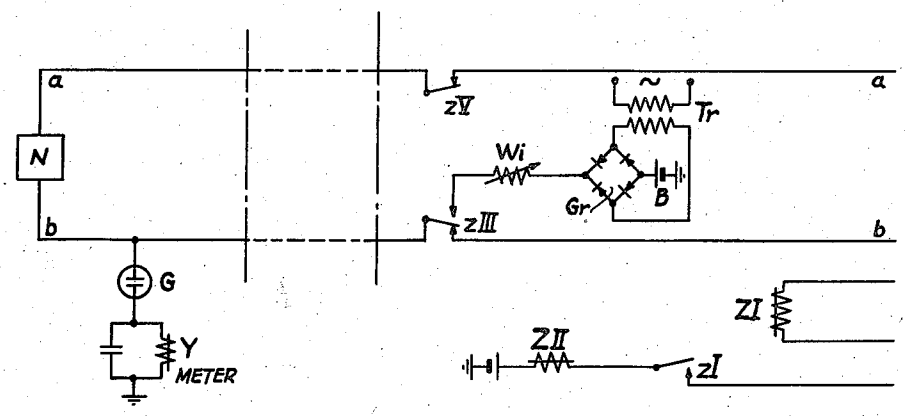

FIG. 2

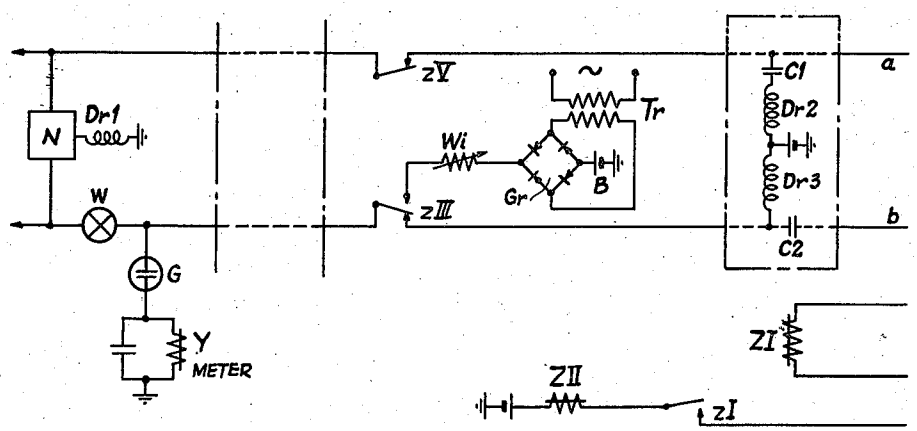

INVENTOR.
HINRICH DOHLE

BY Chas. Tw. Canby

ATTORNEY.

Patented Dec. 27, 1938 2,141,463

UNITED STATES PATENT OFFICE

2,141,463

TELEPHONE METERING SYSTEM

Hinrich Döhle, Berlin-Haselhorst, Germany, assignor to Telephon-Apparat Fabrik E. Zwietusch & Co., Berlin, Germany

Application November 2, 1935, Serial No. 47,971
In Germany November 29, 1934

4 Claims. (Cl. 179—11)

The subject of the present invention relates to a circuit arrangement for call metering at a telephone subscriber's station.

For the purpose of advancing the meter or other charging device at the subscriber's station, switching arrangements are known in which metering is effected by applying to the line at the exchange a potential which is higher than the normal working potential. In the cases in which the meter is permanently connected to the line a glow lamp is connected between the meter and the line, the striking potential of the glow lamp being above the normal working potential of the system so that during the speaking condition of the line no additional attenuation is produced by the connection of the meter to the line.

In the known arrangements in which the meter or other switching device is permanently connected to the line by way of a glow lamp, the high tension potential necessary for the operation of the glow lamp is produced by a transformer which is arranged in series with the exchange battery and is connected to a source of alternating current. If now the working potential is less than the extinguishing potential of the glow lamp, in the known systems only a very brief impulse can be produced for influencing the switching arrangement, for example, the meter. The duration of this impulse is not sufficient for many purposes in the case when the transformer is connected to a source of alternating current whose frequency is 50 cycles or more.

By the present invention impulses can be produced of any desired duration for the purpose of influencing the device connected to the line over the glow lamp, by using for the additional potential an alternating current source of normal frequency e. g. the lighting mains.

In small and medium sized telephone exchanges the only sources available are the exchange battery of 60 volts, and the lighting mains, so that the invention may be applied with advantage in these cases. According to the invention, the direct current potential necessary for striking and running the glow lamp is obtained by connecting a rectifier in series with the exchange battery, the rectifier being fed from a transformer connected to the lighting mains. This arrangement has the advantage that no potential which would endanger the telephone system can reach the telephone lines over the rectifier.

Two embodiments of the invention are represented in the drawing;

Fig. 1 representing the arrangement for a call meter in the case of an ordinary subscriber's connection, and

Fig. 2 the arrangement for a call meter for use with a subscriber's connection having a feeding bridge in the exchange for feeding an extension station at the subscriber's position.

In Fig. 1, N represents the subscriber's telephone set which is connected with the exchange devices over the line *a* and *b*. Of the exchange devices only the metering relay Z having winding ZI and ZII is shown. Relay Z controls the operation of the meter at the subscriber's station over contact ZIII at the appropriate time. The meter Y is connected to the *b*-lead over the glow lamp G. The glow lamp G does not strike with the 60 volt exchange battery B on the line so that the meter Y is connected to the line during speaking conditions without any damping effect.

In order to produce the necessary striking potential for the glow lamp G the exchange battery B is connected in series with a rectifier bridge G*r* which is fed from the lighting mains by way of a transformer T*r*. The transformer is so arranged that the potential obtained from the secondary is 60 volts, so that by having the rectifier G*r* and the 60 volts exchange battery connected in series a total potential of 120 volts is produced which strikes the lamp G. It is convenient to have an adjustable resistance W*i* connected in series with the rectifier bridge and the exchange battery.

In the circuit arrangement shown in Fig. 2, in addition to the devices mentioned in Fig. 1, a feeding bridge is connected in the exchange consisting in the known way of choke coils D*r*2 and D*r*3 and of condensers C1 and C2. At the subscriber's extension station N a further choke coil D*r*1 is arranged over which the feeding current flows in the known way when the subscriber sets up an extension call.

In order to prevent the occurrence of disturbances when the metering current is connected to the line over contact ZIII, an ion-hydrogen resistance W or metal filament lamp is connected in the feeding lead between the subscriber's station and the point to which the meter is connected thus limiting the current over the subscriber's line and preventing an undesirable fall of potential.

What is claimed is:

1. In a telephone metering system, a subscriber's station and line therefor, a call charging meter at said subscriber's station, a glow lamp connecting said meter with one conductor of said line, an exchange battery, means for connecting

said battery to said line to supply talking current for calls thereover, a full wave rectifier connected to said exchange battery, a transformer connected to said rectifier, a source of alternating current connected to said transformer, and means for connecting said rectifier and said exchange battery in series to said line to strike said glow lamp and operate said meter.

2. In a telephone metering system, a subscriber's station, an exchange, a line connecting said station with said exchange, a glow lamp and a call meter connected together in series to said line at said station, an exchange battery to supply direct current for the normal operation of the telephone system and to supply talking current for calls over said line, a transformer at said exchange having an alternating current source connected to it, a full wave rectifier unit for said alternating current connected to said transformer and in series with said exchange battery, a meter relay at said exchange operated when a call is to be charged to said subscriber's station, and means operated by said meter relay for connecting said rectifier unit and said exchange battery in a series circuit with said subscriber's line to strike said glow lamp and operate said subscriber's meter.

3. In a telephone metering system, a subscriber's station, a call charging meter at said station, an exchange, a two-conductor line interconnecting said station and said exchange, an exchange battery, means for connecting said exchange battery to said line to supply talking current for calls thereover, a transformer at said exchange having its primary winding connected to a source of alternating current, a full wave rectifier bridge at said exchange, a secondary winding on said transformer connected to opposite sides of said rectifier bridge, said exchange battery connected to another side of said rectifier bridge, a control conductor extending from the remaining side of said rectifier bridge, and means controlled by the release of a completed telephone connection for connecting said control conductor to one of said line conductors to operate said meter.

4. In a telephone metering system, a subscriber's station, an exchange, a two-conductor line interconnecting said station and said exchange, an exchange battery, means for connecting said battery to said conductors to supply talking current for calls thereover, a call charging meter at said station, a glow lamp at said station for preventing the potential of said battery from operating said meter, a source of alternating current, a transformer having its primary winding connected to said source, a secondary winding on said transformer, a control conductor, means responsive to the release of a completed telephone connection by the subscriber at said station for connecting said control conductor to one of said line conductors; and a full wave rectifier bridge connected to said secondary winding, said exchange battery, and said control conductor in such a manner that the resultant potential of direct current flowing in the control conductor and the said one line conductor is sufficient to operate said meter.

HINRICH DÖHLE.