April 8, 1930. R. VAN BEKKUM 1,754,132

SCAFFOLD JACK

Filed Nov. 14, 1928

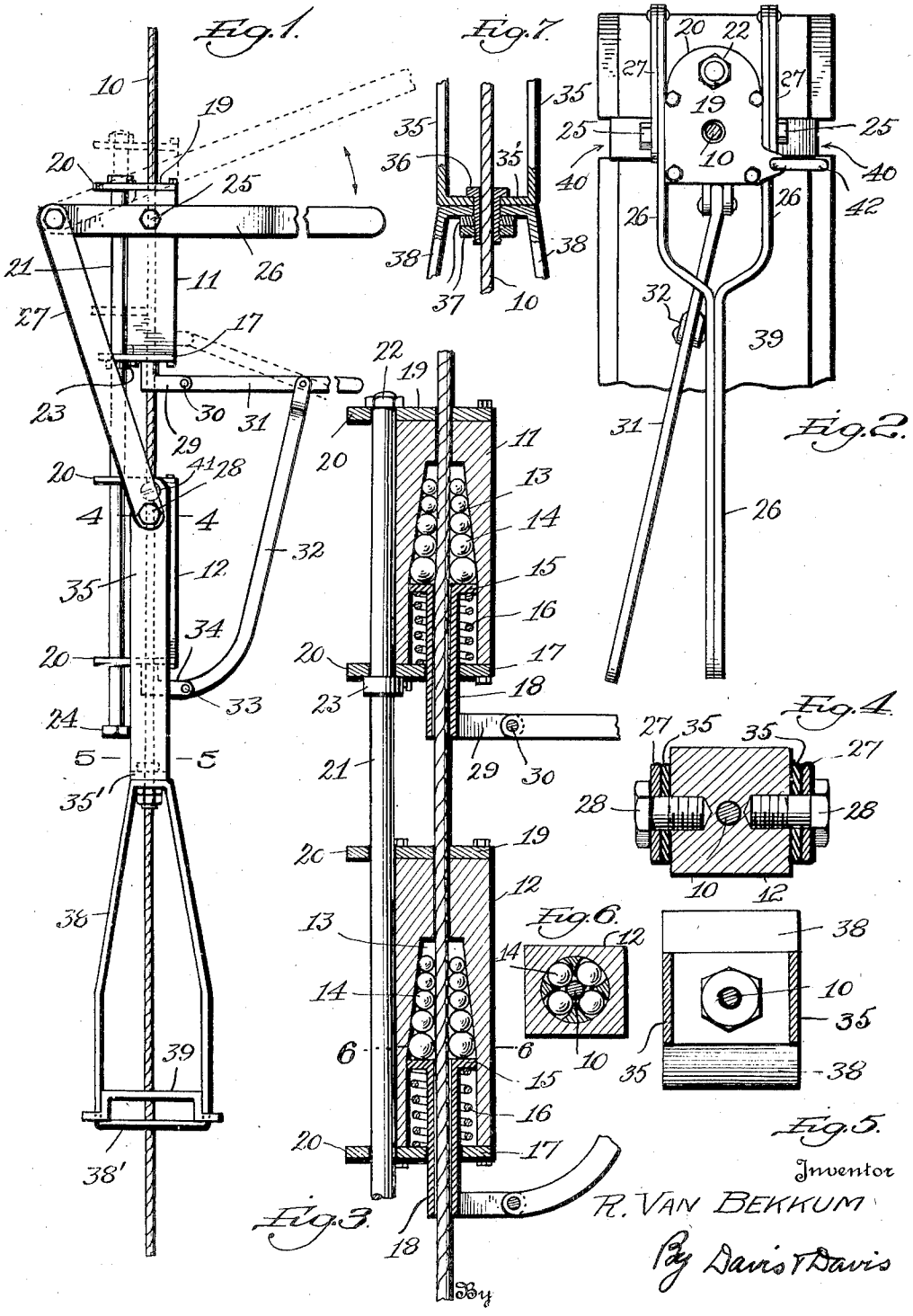

Patented Apr. 8, 1930 1,754,132

UNITED STATES PATENT OFFICE

RICHARD VAN BEKKUM, OF MARYSVILLE, MICHIGAN, ASSIGNOR TO HARRY VAN RAAPHORST, OF PORT HURON, MICHIGAN

SCAFFOLD JACK

Application filed November 14, 1928. Serial No. 319,321.

The object of this invention is to provide a simple jack for suspension upon a depending cable, each jack being provided with mechanism whereby it may be raised and lowered on the cable by the men on the scaffold and also with means whereby each end of the scaffold will have a pivotal or swivel connection with each jack, so that the angle of the scaffold may be varied to suit the needs of each particular job, as more fully hereinafter set forth.

In the drawing—

Figs. 1 to 7, inclusive, illustrate various views of one form of my apparatus.

Referring to the drawing annexed by reference-numerals, 10 designates the cable which is to be suspended at its upper end in any suitable manner and on which is slidably mounted a pair of clutches designated generally by the reference-numerals 11 and 12. The cable passes centrally down through both of these clutches, each clutch being in the form of a tube having a central longitudinal passage for the cable and having a central upwardly-tapering chamber 13 adapted to receive a series of clutch-balls 14 which, when weight is put upon the clutch, tend to grip the cable and hold the clutch at the adjusted point. The balls are pressed upwardly against the inwardly-tapering wall of the chamber 13 by means of a thrust-disk 15 which is pushed upwardly against the balls by means of a coil-spring 16 whose lower end rests upon a plate 17, each of said thrust-disks 15 being provided with a tube 18 which depends slidingly through a hole in the aforesaid plate, which plate closes the lower end of the bore in the clutch-cylinder. A plate 19, similar to plate 17, is bolted to the top end of each clutch-tube, and both plates 17 and 19 are provided with lateral lugs 20 through which a guide-rod 21 extends, this guide-rod serving to guide the clutch-tubes up and down with respect to each other. The upper end of the guide-rod is secured to the lugs 20 carried by the upper clutch by means of a bolt-head 22 and a set-collar 23, and the lower part of the guide-rod slides freely through the lugs 20, being provided with a stop-nut or head 24 at its lower end.

Pivotally mounted on a bolt 25 and screwed into the body of the upper clutch-tube 11 is a bifurcated lever 26 whose rear end (the end opposite the handle-end) is pivotally connected to a depending pair of links 27 whose lower ends are pivotally connected by bolts 28 to the lower clutch-tube 12. The upper depending tube 18 is provided with a lateral lug 29 which has pivotal connection at 30 to the inner end of a hand-lever 31, and this hand-lever is pivotally connected by a rod or link 32 at 33 to a lug 34 similarly attached to the lower tube 18.

Attached to the lower tube 12, by the aforesaid bolts 28, is a stirrup 35 whose lower end depends to a point below the lower end of the tube 12. A horizontal cross-bar 35′ is provided with a central hole for the passage of the cable. Mounted in the cable-hole in this cross-bar 35′ is a tubular bolt 36 provided with a pair of nuts 37 on its depending end and arranged to swivelly connect the upper end of the scaffold-stirrup 38 to the bottom side of the cross-bar 35′, the lower bar 38′ of this stirrup being provided with a hole for the passage of the cable. In the bottom of the stirrup 38, upon the bar 38′, rests a steel beam 39 which is the main beam of the scaffold, i. e., the beam on which the desired scaffold-platform is erected. In the present instance, this beam has its flanges notched at 40 to receive the depending arms of the stirrup 38 and thus prevent this steel beam from shifting endwisely in the stirrup. With this stirrup arrangement, it will be observed that the scaffold-support 39 may be swung around horizontally to different angles without affecting the operation of the jack, thus enabling my jack to be used in a large variety of situations.

In raising the jack on the cable, it is simply necessary to operate the lever 26 pump-handle fashion, it being understood that the weight of the scaffold is normally entirely on the lower clutch 12 except momentarily during the shifting of the scaffold. To raise the scaffold, lever 26 is first raised to raise the clutch 11 one step; then the handle-end

of lever 26 is depressed to thus throw the weight of the scaffold on the upper clutch 11 and slide the lower clutch upwardly on the cable. In this way, the scaffold may be raised in a step-by-step fashion by means of the handle 26. The step movements may be as long as desired, but in no case can the upper clutch 11 be moved a greater distance than the distance between the lower lug 20 and the stop-head 24 on the guide-bolt.

In lowering the jack on the cable, lever 26 is first depressed slightly to loosen the lower clutch and thus throw the weight of the scaffold on the upper clutch; then the handle-end of lever 31 is depressed to compress the lower spring 16 and thus release the lower clutch, while still holding onto the lever 26; then, while still holding the lever 31 depressed, the lower clutch may be let downwardly by easing up on the lever 26; then by releasing lever 31 the lower clutch comes into action and gives full gripping power to that clutch, thereby relieving the upper clutch and permitting the upper clutch to be lowered by releasing its clutch-balls through the medium of the lower lever 31, this release being obtained by raising the handle-end of lever 31 to thus compress the upper spring 16 to thus release the balls in that clutch from gripping action. In this way, the jack may be lowered step-by-step, but in no case can the lower clutch make a greater step downwardly than the distance between the lower lug 20 and the stop-head 24.

With regard to swinging the scaffold-supporting member 39 at different angles, it will be noted that in Fig. 1 this member is swung to a position at right angles to the lever 25, whereas in Fig. 2 this scaffold-supporting member is swung around to a position in alinement with the lever, this latter position being the usual one for ordinary jobs. It is desirable that the clutch-tubes 11 and 12 shall be rectangular in cross-section and that the plates 17 and 19 shall be secured to the ends of the clutch-tubes by bolts tapped longitudinally into the corners thereof. The side members of the stirrup 35 lie flat against the flat walls of the lower tube 12 and it is obvious that means additional to the bolt 28 may be used for fastening these members to the tube. I have illustrated as a sample a sunk screw 41 at the top end of each of the side members of the stirrup. If desired, as shown in Fig. 2, rings 42 may be attached to the upper plates 17 and 19 for use in connection with guard-rails or cables.

What I claim as new is:

1. In a scaffold jack, means for raising and lowering the jack upon a cable, and a supporting-stirrup for the scaffold swivelled to said raising means so as to swing in either direction laterally.

2. In a scaffold jack, means for raising and lowering the jack upon a cable, and a supporting-stirrup for the scaffold swivelled to said raising means so as to swing in either direction laterally, the swivel means consisting of a tubular bolt through which the cable passes.

3. In a scaffold jack, means for raising and lowering the jack upon a cable, and a supporting-stirrup for the scaffold swivelled to said raising means so as to swing in either direction laterally, the swivel means consisting of a tubular bolt through which the cable passes, said stirrup being provided with a hole for the passage of said cable so that the stirrup will swivel laterally on an axis coincident with the cable.

4. In a scaffold jack adapted to be used with a cable, a pair of clutches working independently on said cable, the lower clutch having suspended to it means for supporting the scaffold, a lever arrangement for connecting the clutches for giving them an alternate step-by-step elevation on the cable, and a single lever-actuated means for alternately releasing the clutches.

5. In a scaffold jack, a pair of independent clutches adapted to work on a cable, each being provided with cable-gripping elements and a spring-actuated member to cause said elements to normally grip the cable, a single lever mechanism for alternately releasing said members to thus free the clutches alternately from the cable, and an additional lever mechanism for alternately raising the clutches and said releasing mechanism.

6. In a scaffold jack adapted to be used with a cable, a pair of clutches working independently on said cable, the lower clutch having suspended to it means for supporting the scaffold, a lever arrangement for connecting the clutches for giving them an alternate step-by-step elevation on the cable, and a single lever-actuated means for alternately releasing the clutches, means being provided for guiding the two clutches with respect to each other and for limiting the distance apart the clutches shall be separated.

7. In a scaffold jack adapted to be used with a cable, a pair of tubular clutches working independently on said cable, each having an upwardly-tapering interior chamber filled with clutch-balls, a thrust-disk working against these clutch-balls to normally grip the cable, a lever arrangement for connecting the clutches for giving them alternate step-by-step elevation on the cable, and lever-actuated means for alternately releasing the clutches by pulling down said thrust-disks.

In testimony whereof I hereunto affix my signature.

RICHARD VAN BEKKUM.