(No Model.)

# W. H. KELLY.

## GAME.

No. 431,363. Patented July 1, 1890.

Fig 1.

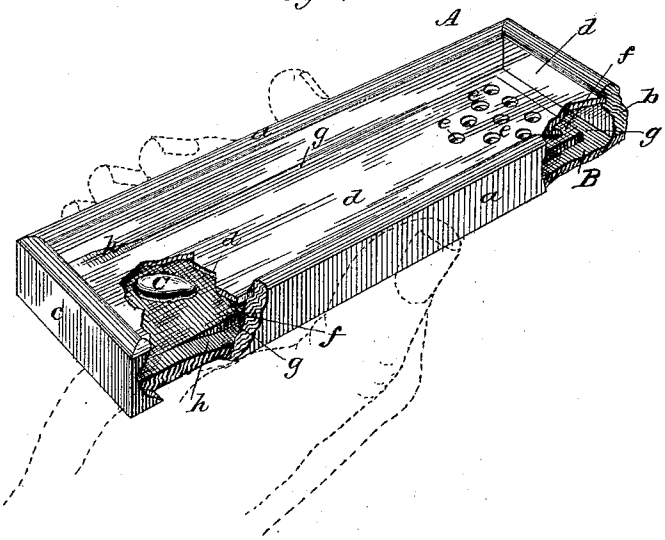


Fig 2

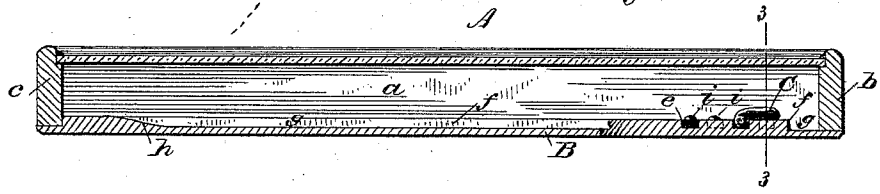


Fig 3

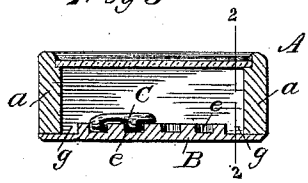


WITNESSES

Howard L. King.

B. H. Naylor

INVENTOR

Wm. H. Kelly

By Harry King

his Attorney

THE NORRIS PETERS CO., PHOTO-LITHO., WASHINGTON, D. C.

# UNITED STATES PATENT OFFICE.

WILLIAM H. KELLY, OF NEW YORK, N. Y.

## GAME.

SPECIFICATION forming part of Letters Patent No. 431,363, dated July 1, 1890.

Application filed March 19, 1890. Serial No. 344,486. (No model.)

*To all whom it may concern:*

Be it known that I, WILLIAM H. KELLY, a citizen of the United States, residing at New York, in the county of New York and State of New York, have invented certain new and useful Improvements in Games; and I do hereby declare the following to be a full, clear, and exact description of the invention, such as will enable others skilled in the art to which it appertains to make and use the same.

My invention relates to games; and it consists in the construction of a glass-covered box, the upper or inner surface of the bottom thereof being provided with an elevated surface, with grooves or guideways, and with small pockets adapted to catch and hold parts of an inclosed ball of quicksilver. The elevated portion of the bottom and the grooves around the outer end and two sides thereof are constructed to simulate the floor of a ten-pin alley. The pockets occupy locations given to the ten-pins and are substituted therefor. A ball of quicksilver securely inclosed within the box and of sufficient size to properly fill the ten pockets when evenly segregated into the requisite number of parts fulfills the functions of the usual ten-pin ball. For every pocket containing a segregated portion of quicksilver after the latter has been deflected to the pocket end of the alley a count is made in the same manner as in a game of ten-pins.

In the drawings, Figure 1 is a perspective of my improved game, showing portions of the box in section. Fig. 2 is a vertical longitudinal section of same, cut through line 2 2 of Fig. 3; and Fig. 3 is a transverse section of same, cut through line 3 3 of Fig. 2.

The box A consists of sides *a a*, an outer pocket-end *b*, an inner or home end *c*, a glass or other transparent top *d*, and a bottom B, the several parts all being nicely joined together in such a manner as to prevent escapage of any part of the contained quicksilver C. Pockets *e* are formed in the outer portion of the raised surface *f* of the floor or bottom B, and are located with reference to the home end of the box and to each other as are the pins in a ten-pin alley. Grooves or guideways *g* surround the raised floor or bottom at the pocket end and two sides, the inner or home ends of the two side guideways being provided with inclines *h*, by means of which the ball of quicksilver is allowed to return to the elevated floor. These guideways facilitate the return of the ball of quicksilver to the starting-point or home and at the same time make the transit of the silver from the starting-point to the pockets more difficult of accomplishment.

The ball of silver after being carefully returned and balanced on the home end of the alley-floor, as shown in Fig. 1, is propelled outwardly along the raised floor by a dextrous deflection of the outer end of the box, care being taken to prevent the ball from rolling off into the side grooves. In passing over the pockets particles of the silver are generally segregated or torn from the ball and remain in the pocket, as shown at *i* in Fig. 2. At times, however, the adhesive qualities of the quicksilver will cause the particle deposited in the pocket to be drawn up and out of such pocket by the passing ball, thus adding further obstacles to a large score. For each pocket holding a particle of silver after a shot has been made one point is counted, and for a ten-strike the same credit is given as in a game of ten-pins. It is obvious, however, that any number of rules for governing the game can be made.

I am aware that quicksilver securely inclosed in a box having a glass top has been heretofore used in games, and I therefore do not broadly claim the same; but

What I do claim as novel, and desire to secure by Letters Patent, is—

1. In combination with a ball of quicksilver, an alley or floor constructed at its ten-pin or "bank" end with pockets, as described, and with grooves or guideways located on each side of the alley and provided at the player's end of said grooves with inclines, as and for the purposes set forth.

2. The glass-covered box consisting of a bottom provided with an elevated alley-surface, with grooves or guideways and inclines on each side of the alley, and with small pockets constructed in the ten-pin or bank end of the raised floor, as described, in combination with a ball of quicksilver securely inclosed within the box, as set forth.

In testimony whereof I affix my signature in presence of two witnesses.

WILLIAM H. KELLY.

Witnesses:
WM. SCHNEIDER,
LEMUEL Y. REDMORE.