Dec. 1, 1964 W. PECHMANN 3,159,521

APPARATUS TO SEVER, PRINT AND APPLY LABELS TO CONTAINERS

Filed Dec. 12, 1960

Fig. 1

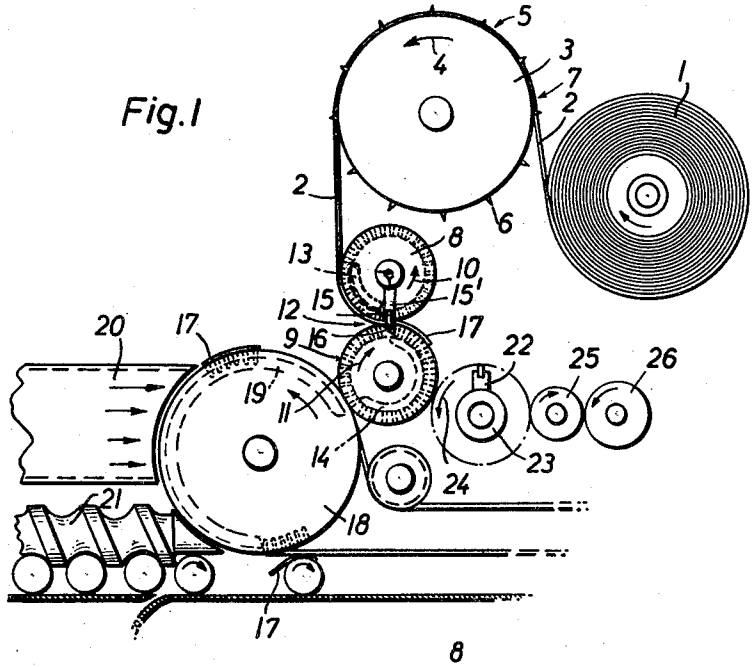

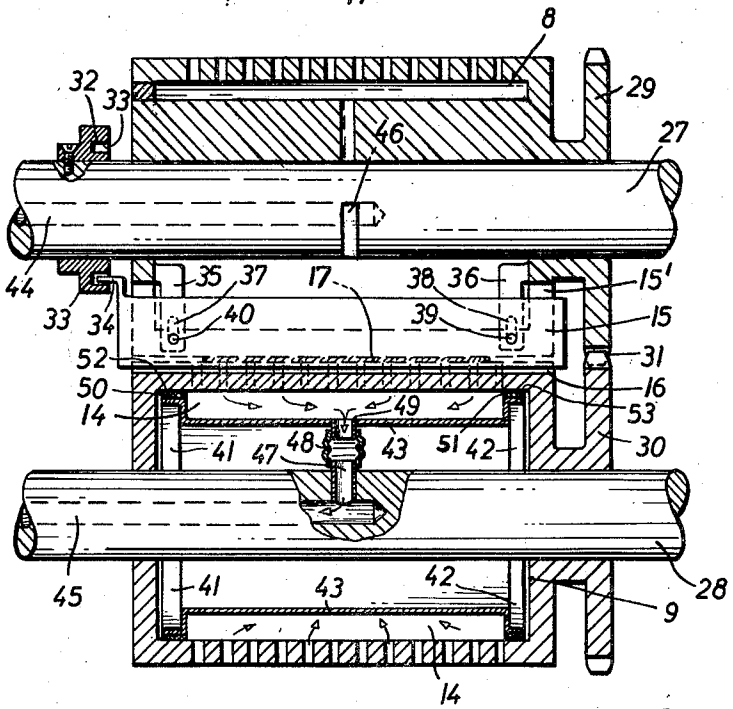

Fig. 2

INVENTOR
Wichelm Pechmann

BY
Michael S. Striker
Attorney

United States Patent Office 3,159,521 Patented Dec. 1, 1964

3,159,521

APPARATUS TO SEVER, PRINT AND APPLY LABELS TO CONTAINERS

Wilhelm Pechmann, Burscheid, near Cologne, Germany, assignor to H. Strunck & Co., Cologne-Ehrenfeld, Germany

Filed Dec. 12, 1960, Ser. No. 75,451
5 Claims. (Cl. 156—499)

The present invention relates to a process and apparatus for applying labels to containers.

One of the objects of the present invention is to provide a process and apparatus which will enable labels to be transported to a label-applying station at a speed greater than the speed of movement of a band from which the labels are derived so that the production provided by the process and apparatus of the invention will be very high.

Another object of the present invention is to provide a process and apparatus which will maintain a band, from which the labels are derived, under tension while labels are cut from a free end of the band so that the lengths of the labels will be very precisely determined.

A further object of the present invention is to provide a process and apparatus which make it possible for printing of any type to be applied to the labels after they are cut from the band and while the labels are being transported from the band to a label-applying station.

It is also an object of the present invention to provide an apparatus capable of accomplishing the above objects and at the same time composed of simple ruggedly constructed elements which are very reliable in operation.

With the above objects in view the present invention includes, in a process for applying labels to containers, the steps of moving a band, from which the labels are derived, at a predetermined speed along a predetermined path, cutting labels from a free end of the band while it is moving, and then transporting the labels after they are cut from the band to a label-applying station at a speed greater than the speed of movement of the band itself.

Also, in accordance with the present invention, the invention includes a means for moving a band, from which the labels are to be derived, along a predetermined path at a predetermined speed. A cutting means is located along the path of movement of the band for successively cutting labels from a free end of the band, and a transporting means is located adjacent the cutting means for receiving the labels therefrom and for transporting the labels to a label-applying station at a speed greater than the speed with which the band is moved along the predetermined path by the moving means.

The novel features which are considered as characteristic for the invention are set forth in particular in the appended claims. The invention itself, however, both as to its construction and its method of operation, together with additional objects and advantages thereof, will be best understood from the following description of a specific embodiment when read in connection with the accompanying drawing, in which:

FIG. 1 is a diagrammatical side elevation of a machine according to the invention; and

FIG. 2 is a sectional elevation on an enlarged scale of a pair of cooperating rolls.

The band from which the labels are derived is in the original state in the form of a supply roll 1 supported for rotation in a clockwise direction, as indicated in the drawing by the arrow on the supply roll 1. In accordance with the present invention the band is continuously drawn from the supply roll 1, and the moving means of the invention which moves the band 2 from the supply roll 1 takes the form of a rotary drum 3 which is rotated in a counter-clockwise direction, as indicated by the arrow

4, to continuously draw the band 2, from which the labels are derived, from the supply roll 1. The band 2 is formed, before being wound so as to provide the supply roll 1, with perforations distributed longitudinally along the band 2 by distances equal to the length of the labels. Between each pair of adjacent labels the band 2 is in fact provided with a row of perforations extending crosswise of the band 2. Thus, as the band 2 is drawn from the supply roll 1 the band 2 unwinds and thus access may be had to its perforations The moving means formed by the rotary drum 3 is provided at its periphery 5 with a plurality of projections 6 in the form of pointed pins which are uniformly distributed about the axis of the drum 3 and which are spaced from each other by distances equal to the length of the labels so that the pins 6 enter into the perforations on the band 2, and thus there is no slippage between the band 2 and the rotary band-moving drum 3. Actually there are several axial rows of pins 6 corresponding to the transverse rows of perforations on the band 2 and entering into these perforations. Any suitable slip clutch or the like cooperates with the supply roll 1 to retard the turning thereof so that the band 2 is maintained in tension while it is drawn from the supply roll 1 by the rotating drum 3. In this way the band 2 is moved by the moving means 3 at a predetermined constant speed, the drum 3 rotating at a constant speed, along a predetermined path, the band 2 leaving the drum 3 at the side of the latter distant from the roll 1 and moving downwardly from the drum 3 in the manner indicated in the drawing at the left side of the drum 3.

A transporting means is provided for transporting the labels after they are successively cut from a free end of the band 2 to a label-applying station, and this transporting means includes a pair of rotary suction roll means 8 and 9. These rolls 8 and 9 are rotated in the opposite directions indicated by the arrows 10 and 11, respectively, by any suitable driving mechanism, and each roll 8 and 9 is formed along its entire periphery with a plurality of suction passages, each of these passages including a radial portion extending from the exterior periphery of the roll toward the axis thereof and an axial portion extending from the radial portion to the side of each roll 8 and 9 which is not visible in the drawing. At this latter side of the rolls 8 and 9 are respectively located a pair of suction conduits 13 and 14 which have arcuate mouths as indicated in the drawing and which engage the sides of the rolls opposite from those visible in the drawing. These conduits communicate with any suitable vacuum pump or the like. It will be seen that the suction conduit 13 extends to approximately 90° along the lower left quadrant of the roll 8, as viewed in the drawing, while the suction conduit 14 extends through something more than 180° around the right portion of the roll 9, as viewed in the drawing. Thus, those peripheral passages of the roll 8 which at any given instant are in communication with the suction conduit 13 will draw the free end of the band 2 against the roll 8, and those peripheral passages of the roll 9 which at any given instant are in communication with the suction conduit 14 will hold against the periphery of the roll 9 a label 17 which has been cut from a free end of the band 2.

The oppositely rotating pair of suction roll means 8 and 9 define between themselves a gap 12 into which the band 2 moves. When the band is between the rolls 8 and 9 it is cut by a cutting means which includes a blade 15 which is movable radially within a radial slot 15' formed in the roll 8. The slot 15' is at least as long as the blade 15, preferably somewhat longer than this blade, and the blade 15 has such a width that it can cut completely across the band 2.

The radial groove 15' in which the blade 15 is guided for radial movement toward and away from the axis of the roll 8 opens, of course, onto the exterior periphery of the roll 8, and this groove also opens onto the side of the roll 8 which is not visible in the drawing. At this latter side of the roll 8 there is located an annular stationary cam which surrounds the shaft which carries the roll 8 and which is located directly next to the side of the roll 8 which is not visible in the drawing. This stationary annular cam is formed at its surface which is directed toward the roll 8 with an endless camming groove, and the blade 15 carries a pin which extends parallel to the axis of the roll 8 and which extends into this stationary camming groove. The endless camming groove extends around the axis of the roll 8 at a substantially constant radial distance therefrom except for the portion of the groove which is nearest to the roll 9. The constant radial distance of this camming groove is such that the blade 15 is maintained during most of each rotation of the roll 8 retracted from the exterior periphery of the latter. At its portion which is nearest to the roll 9 this camming groove is substantially V-shaped and extends radially away from the axis of the roll 8 with the crest of the V-shaped portion of the camming groove coinciding with the position in which the blade 15 is illustrated in the drawing. Thus, as the blade 15 approaches the position shown in the drawing the camming groove will cooperate with the pin which is fixed to the blade 15 to move the latter radially away from the axis of the roll 8 to the position shown in the drawing, and then during the continued turning of the roll 8 the blade 15 will be retracted and will remain in its retracted position until the blade 15 again approaches the position shown in the drawing. The roll 9 operates at the same speed of rotation as the roll 8 and turns in a direction opposite to the direction of rotation of the roll 8, as indicated by the arrow 11, and this roll 9 is formed in its periphery with a notch 16 into which the leading, cutting end of the blade 15 can extend when the blade 15 is moved forwardly through its cutting stroke by the above-described cam means. Thus, the cutting means 15 will cut across the band 2 once during each revolution of the rolls 8 and 9, and the cutting will take place in the gap 12, the blade 15 moving across this gap as shown in the drawing and described above.

As was pointed out above, the pins 6 are angularly spaced by distances which at the periphery of the drum 3 are equal to the length of the labels 17, and since the cutting means 15 operates once during each revolution of the roll 8 to cut a label 17 from the free end of the band 2, it is clear that the speed of rotation of the rolls 8 and 9 is several times greater than the speed of rotation of the drum 3. The speed of rotation of each of the rolls 8 and 9 is equal to the speed of rotation of the drum 3 multiplied by the number of spaces at the periphery of the drum 3 between the angularly distributed pins 6. It will be seen that in the illustrated example there are twelve such spaces, so that in the illustrated example the speed of rotation of the rolls 8 and 9 is twelve times the speed of rotation of the drum 3. As a consequence, the periphery of the roll 8 necessarily slips with respect to the band 2 while the latter moves through the gap 12 until a length of the band 2 equal to the length of the label 17 is located beyond the point where the blade 15 cuts across the free end of the band 2 to separate a label 17 therefrom. Because of this slippage of the roll 8 with respect to the band 2 and because of the fact that the band 2 is held at this time against the periphery of the roll 8 by the cooperation of the peripheral passages of the roll 8 with the suction conduit 13, the band 2 is maintained under tension at all times and thus the substantially non-stretchable band 2 is cut very precisely at the proper intervals corresponding to the lengths of the labels 17. Of course, the drum 3 is driven positively at a constant speed of rotation by a mechanism which does not permit the tension applied to the band 2 to rotate the drum 3 at a speed greater than that with which it is positively driven.

It will be seen, therefore, that the transporting means formed by the suction roll means 8 and 9 receives the labels 17 as they are successively cut from the band 2 by the cutting means 15, and the roll 9 continues the transportation of the severed labels 17. Because the labels 17 are successively held against the periphery of the roll 9 by cooperation of the suction passages of the latter with the conduit 14, the labels 17 are transported by the roll 9 to the roll 18. The right end, as viewed in the drawing, of a suction conduit 19 which cooperates with the peripheral passages of the roll 18 in the same way that the above-described suction conduits 13 and 14 cooperate with the suction passages of the rolls 8 and 9, sligthly overlaps the left end of the suction conduit 14, as indicated in the drawing, so that the labels 17 will be transferred from the roll 9 to the roll 18 which turns in a counter-clockwise direction, as indicated by the arrow in the drawing. The drum or roll 18 is driven by a suitable endless band which also acts as a conveyor and as a label-applying device in a manner described below. It will be noted that the face of each label 17 which engages the periphery of the roll 9 is directed away from the periphery of the roll 18, and this particular face of each label 17 carries a dry adhesive which will become tacky when heated. A conduit 20 is located next to the periphery of the roll 18 and defines with the latter an arcuate gap through which each label 17 is moved by the roll 18, and during movement through this latter gap hot air delivered by the conduit 20 engages the adhesive coating on each label 17 so as to raise the temperature of this coating and render it tacky.

At the same time, a screw conveyor 21 continuously rotates to transfer to the right, as viewed in the drawing, a series of containers of cylindrical configuration, and when these containers leave the screw 21 they are located at the lowest part of the roll 18 to be directly engaged by the endless belt which drives the roll 18. The several cylindrical containers thus roll to the right, as viewed in the drawing, along a stationary supporting surface, the rolling of the containers being provided by the action of the belt which drives the roll 18. As each container is delivered by the screw 21 to the lower end of the roll 18, a label 17 arrives at the lower end of the roll 18 to be pressed against the exterior surface of each container and due to the rolling of the latter in the manner indicated by the arrows in the drawing the label 17 has its tacky face applied directly in the exterior of the container so that in this way the labels are applied and the containers with the labels thereon are collected at any suitable location.

FIG. 2 shows in section the structure of the rolls 8 and 9. Thus, it will be seen that the roll 9 is hollow and is supported for rotation by a stationary shaft 28 formed with an axial bore 45 communicating with a suitable source of suction. The bore 45 communicates with a tube 47 extending into a radial bore of the shaft 28, and a tube 48 connects the tube 47 with a tube 49 fixed to a wall 43 which forms part of a cylinder and extends along the arc indicated in FIG. 2. At its ends the wall 43 is connected with radial walls extending to the inner surface of the roll 9, and these radial walls are also connected to the ends of arcuate flanges 41 and 42 shown in FIG. 2 and engaging stationary sealing means 50 which slidably engage the inner surface of the roll at 52 and 53. Thus, the openings at the outer cylindrical wall of the roll 9 which at any instant communicate with the space defined between the roll 9 and the wall 43 will be placed in communication with the source of suction.

The roll 8 is solid and formed with an axially extending cutout in which a pair of brackets 35 and 36 are located, these brackets being formed with the slots 37

and 38, respectively, which receive the pins 39 and 40 fixed to the blade 15 so that the latter is guided for radial movement. At its left end the blade 15 is fixed to a pin 34 which rides in the camming groove 33 of the stationary cam 32 which is fixed to the shaft 27 which extends through an axial bore of the roll 8 and supports the latter for rotation. The bottom end of the camming groove is located at a greater distance from the shaft 27 than the remainder of this groove so that the blade 15 will be moved radially beyond the exterior surface of roll 8 into the axial notch 16 of roll 9 when the roll 15 is in its lowermost position, and then the blade 15 is moved back into the axial notch 15' during continued turning of the roll 8. The several rows of openings at the exterior surface of the roll 8 respectively communicate with axial bores distributed about the periphery of the roll 8, and each of these axial bores in turn communciates with a radial bore extending to the exterior surface of the shaft 27, there being a radial bore for each axial bore which communicates with a row of exterior openings. The stationary shaft 27 is formed with a sector-shaped cutout located at the lower left quadrant of the shaft 27, as viewed in FIG. 1, so that the inner radial bores of the roll 8 which at any instant are at the lower left quadrant of FIG. 1 communicate with this sector-shaped cutout. The latter cutout communicates with an axial bore 44 in shift 27, this latter axial bore communciating also with a source of suction.

The stationary shafts 27 and 28 also support a pair of gears 29 and 30 for rotation, and these gears are respectively fixed with the rolls 8 and 9 and mesh with each other at 31. A suitable drive is connected to one of the gears 29 and 30.

It is possible with the process and apparatus of the invention to apply some or all of the printing of the labels to the latter while the labels are being transported from the band 2 to the label-applying station shown at the lowermost part of the drawing. Thus, a roll 23 supported for rotation about its axis which is parallel to the axis of the roll 9 is driven in a counterclockwise direction, as indicated by the arrow 24, and this roll 23 carries any suitable printing stamp or printing type 22 which engages the label 17 as it moves with the roll 9 from the roll 8 to the roll 18. The stamping or printing member 22 can simply provide an identifying member or the like to each label or it can, if desired, print the entire label. The roll 23 cooperates with a pair of rolls 25 and 26 which in a well known manner deliver ink of any desired color to the face of the printing type so as to be transferred by the latter to the label in a well known manner. In this way it is possible to apply some or all of the printing of the labels to the latter during their transportation from the cutting means 15 to the label-applying station at the lowermost part of the roll 18, as viewed in the drawing.

Of course, instead of providing the band of the roll 1 with a coating of adhesive on one face which is dry and non-tacky for being acted upon by the stream of hot air in the conduit 20, it is entirely possible to leave the band without any adhesive until it reaches a location such as that where the conduit 20 is located, and at this location it is possible to provide with any suitable known mechanism a layer of glue to each label 17 so that the layer of adhesive is applied just prior to application of the label to the container.

It will be understood that each of the elements described above, or two or more together, may also find a useful application in other types of label-applying process and apparatus differing from the types described above.

While the invention has been illustrated and described as embodied in process and apparatus for individually applying labels to containers, it is not intended to be limited to the details shown, since various modifications and structural changes may be made without departing in any way from the spirit of the present invention.

Without further analysis, the foregoing will so fully reveal the gist of the present invention that others can by applying current knowledge readily adapt it for various applications without omitting features that, from the standpoint of prior art, fairly constitute essential characteristics of the generic or specific aspects of this invention and, therefore, such adaptations should and are intended to be comprehended within the meaning and range of equivalence of the following claims.

What is claimed as new and desired to be secured by Letters Patent is:

1. In an apparatus for applying labels to containers, in combination, moving means for moving a band, from which the labels are derived, continuously from a supply roll at a predetermined speed along a predetermined path; a pair of oppositely rotating suction roll means located along said path and defining between themselves a gap through which the band passes from said moving means, said oppositely rotating suction roll means each rotating at a peripheral speed which is greater than said predetermined speed; cutting means carried by one of said suction roll means and cooperating with the other of said suction roll means for cutting a free end of the band as it passes between said pair of suction roll means so as to cut from said band during revolution of said suction roll means a label which is transported beyond said band at a speed greater than the speed of movement thereof by the other of said suction roll means; and an additional suction roll means closely adjacent to the periphery of said other suction roll means and rotating in a direction opposite to the direction of rotation of the latter for transporting each label to a label applying station.

2. In an apparatus for applying labels to containers, in combination, moving means for moving a band, from which the labels are derived, continuously from a supply roll at a predetermined speed along a predetermined path; a pair of oppositely rotating suction roll means located along said path and defining between themselves a gap through which the band passes from said moving means, said oppositely rotating suction roll means each rotating at a peripheral speed which is greater than said predetermined speed; cutting means carried by one of said suction roll means and cooperating with the other of said suction roll means for cutting a free end of the band as it passes between said pair of suction roll means so as to cut from said band during revolution of said suction roll means a label which is transported beyond said band at a speed greater than the speed of movement thereof by the other of said suction roll means; printing means cooperating with said other of said suction roll means for printing each label as it is transported by said other suction roll means on the surface thereof facing away from said other suction roll means; and an additional suction roll means closely adjacent to the periphery of said other suction roll means and rotating in a direction opposite to the direction of rotation of the latter engaging each label on the printed surface thereof for transporting each label to a label applying station.

3. In an apparatus for applying labels to containers, in combination, moving means for moving a band, from which the labels are derived, continuously from a supply roll at a predetermined speed along a predetermined path; a pair of oppositely rotating suction roll means located along said path and defining between themselves a gap through which the band passes from said moving means, said oppositely rotating suction roll means each rotating at a peripheral speed which is greater than said predetermined speed; cutting means carried by one of said suction roll means and cooperating with the other of said suction roll means for cutting a free end of the band as it passes between said pair of suction roll means so as to cut from said band during revolution of said suction roll means a label which is transported beyond said band at a speed greater than the speed of movement thereof by the other of said suction roll means; printing means cooperating

with said other of said suction roll means for printing each label as it is transported by said other suction roll means on the surface thereof facing away from said other suction roll means; an additional suction roll means closely adjacent to the periphery of said other suction roll means and rotating in a direction opposite to the direction of rotation of the latter engaging each label on the printed surface thereof for transporting each label to a label applying station; and means cooperating with said additional suction roll means for rendering the surface of each label opposite to said printed surface adhesive.

4. In an apparatus as recited in claim 3 wherein said band carries a layer of dry adhesive on one surface thereof which becomes tacky when heated and wherein said last mentioned means comprises heating means for heating said layer of dry adhesive of each label so as to render it tacky.

5. In an apparatus as recited in claim 3 and including feeding means for feeding a plurality of containers past peripheral portions of said additional suction roll means to apply the labels transported by said additional suction roll means onto said containers.

References Cited in the file of this patent

UNITED STATES PATENTS

2,233,922	Kaddeland	Mar. 4, 1941
2,252,735	Sherman	Aug. 19, 1941
2,528,296	Baron et al.	Oct. 31, 1950
2,687,819	Hill et al.	Aug. 31, 1954
2,797,010	Neer	June 25, 1957
2,862,707	Voysey	Dec. 2, 1958
2,958,365	Molins et al.	Nov. 1, 1960
2,981,432	Flood	Apr. 25, 1961