June 5, 1945. E. W. DURKIN 2,377,544

ELECTRIC SIGNALING SYSTEM

Filed Sept. 28, 1942 3 Sheets-Sheet 1

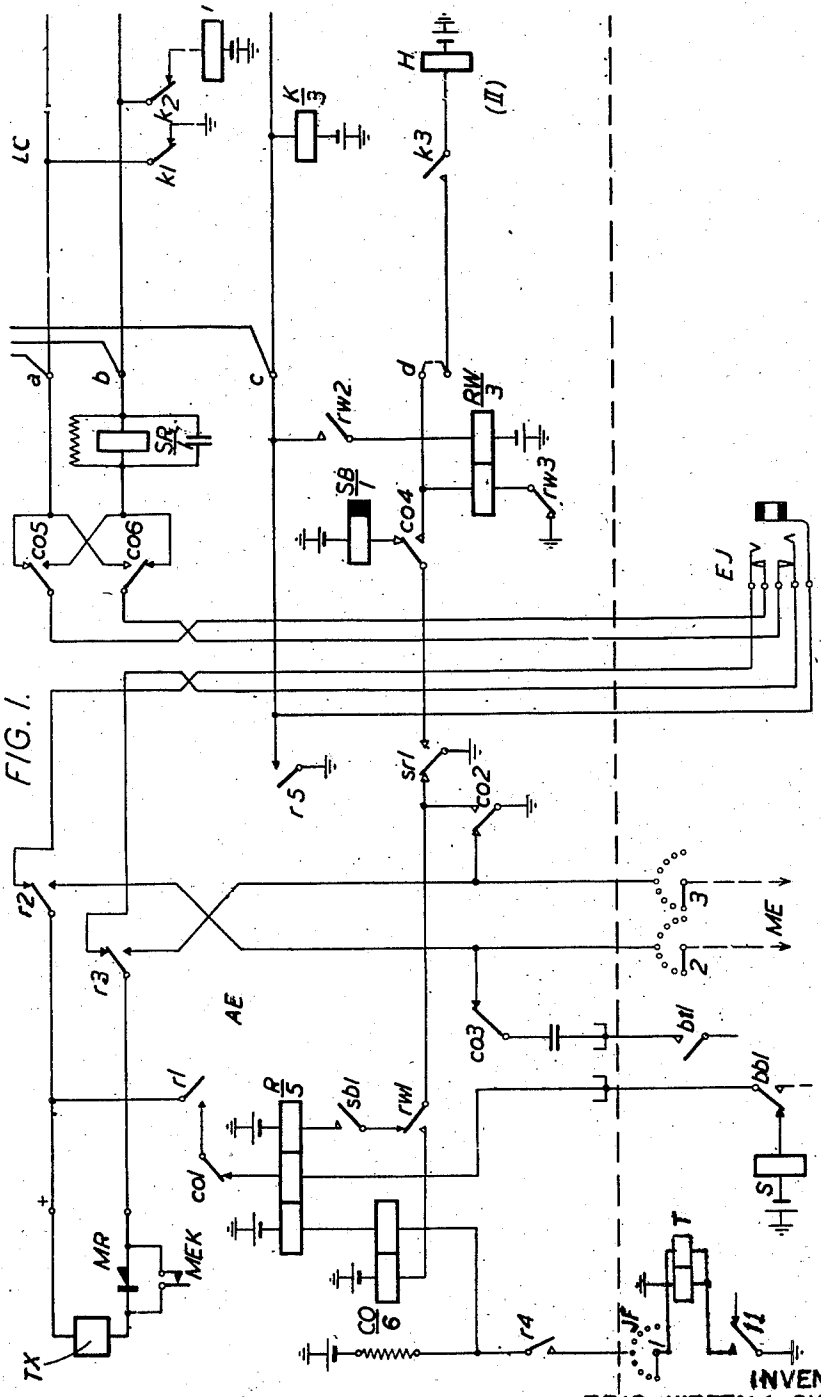

FIG. 1.

INVENTOR
ERIC WESTALL DURKIN

BY Chas. W. Cady

ATTORNEY

June 5, 1945. E. W. DURKIN 2,377,544

ELECTRIC SIGNALING SYSTEM

Filed Sept. 28, 1942 3 Sheets-Sheet 2

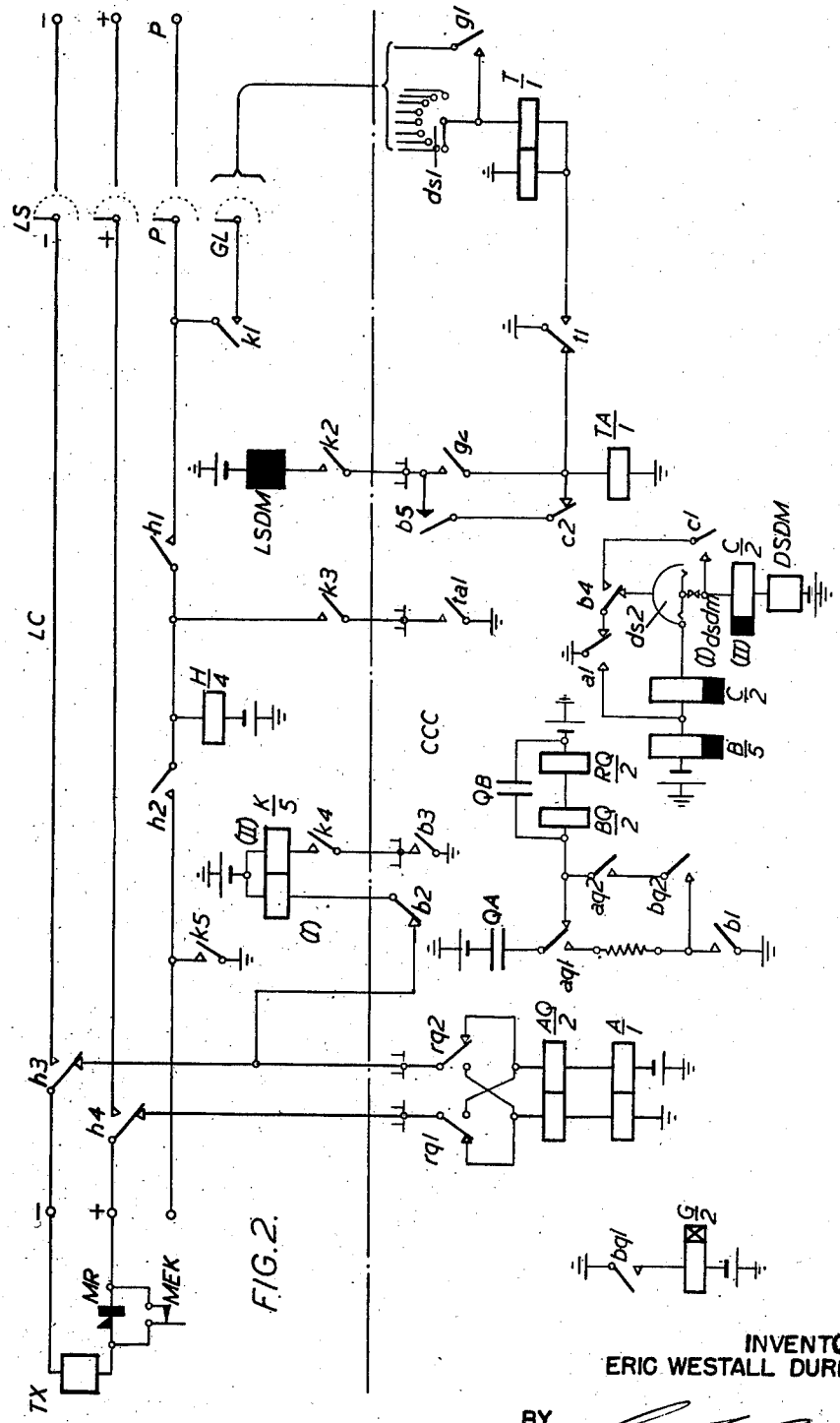

FIG. 2.

INVENTOR
ERIC WESTALL DURKIN

BY Chas. Ts. Candy

ATTORNEY

June 5, 1945. E. W. DURKIN 2,377,544

ELECTRIC SIGNALING SYSTEM

Filed Sept. 28, 1942 3 Sheets-Sheet 3

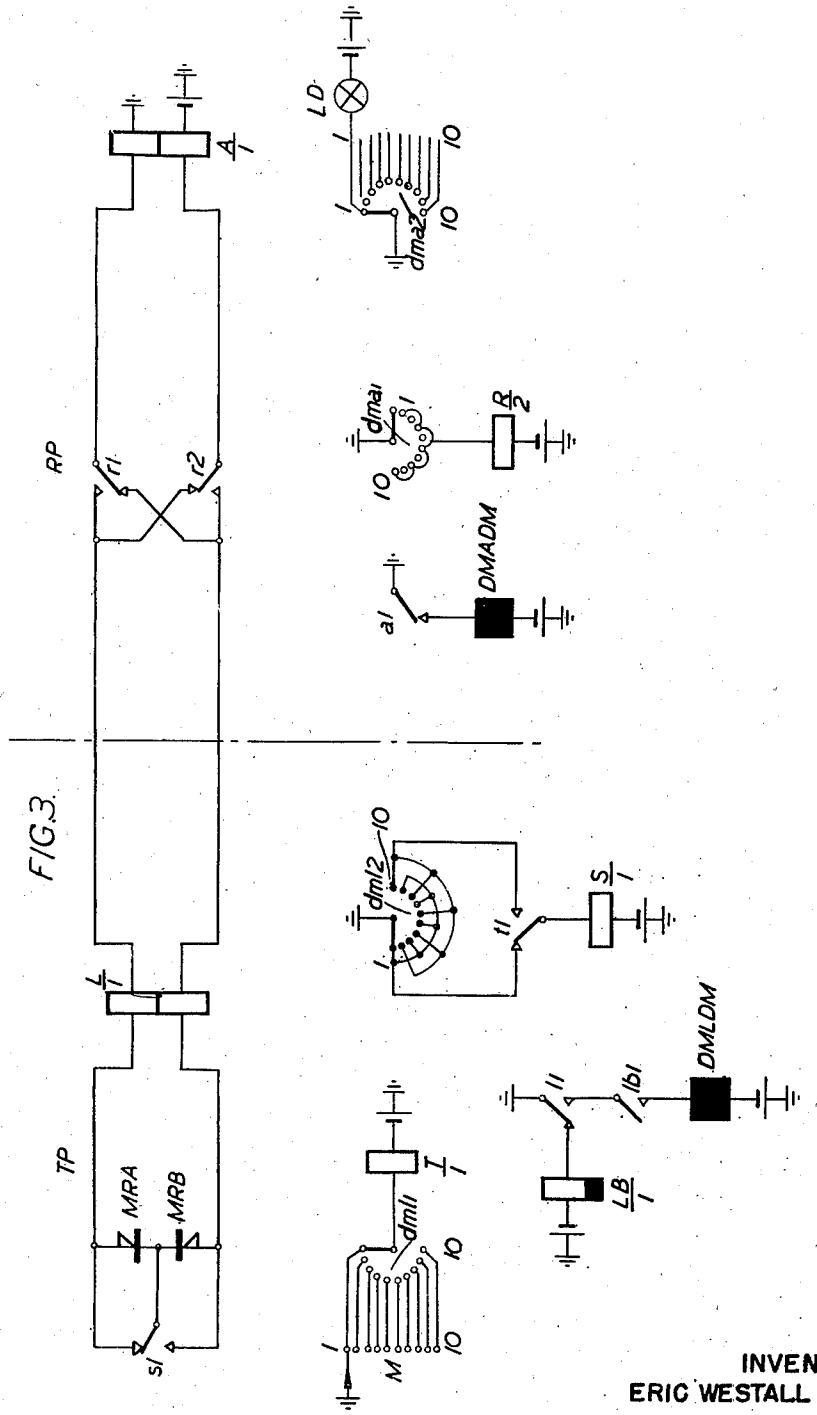

FIG. 3

INVENTOR
ERIC WESTALL DURKIN

BY Chas. L. Candy.
ATTORNEY

Patented June 5, 1945 2,377,544

UNITED STATES PATENT OFFICE

2,377,544

ELECTRIC SIGNALING SYSTEM

Eric Westall Durkin, Chislehurst, England, assignor to Siemens Brothers & Co. Limited, London, England, a British company

Application September 28, 1942, Serial No. 459,911
In Great Britain October 14, 1941

15 Claims. (Cl. 179—84)

This invention relates to electric signaling systems and is more particularly concerned with direct current systems in which a source of current by which signaling is effected is situated at one end of the signaling circuit over which signals are to pass.

The invention may be used alone for signaling from one end of a signaling circuit to the other or it may be used in addition to other and different signals normally transmitted over the circuit, e. g. impulses, to bring about some distinctive operation at the distant or receiving end of a circuit without the use of a wire or path additional to the normal signaling wire or wires. It is especially applicable to the transmission of a signal by manual means in that the signal is independent of the duration of a manual operation provided it continues for a long enough time to permit response to the signal at the receiving end.

In the present invention a signal is transmitted in response to an action taken at a transmitting point which brings about a modification of the signaling circuit whereby apparatus at the receiving point is caused to change its condition and thereby annul the effects of the said modification at the transmitting point. In order to accomplish this the said apparatus on its change of condition may have as its consequence circuit changes which restore the conditions in the signaling circuit similar to those existing before the said action was taken, and these said conditions may continue independently of the continuance of the action. The signal is preferably made dependent on the direction of current flow in the signaling circuit.

The action taken in transmitting a signal may be the insertion of a block in the signaling circuit or the removal of a block thereby bringing about the change of condition such as release or operation of a signal receiving relay at the receiving point. The block is conveniently in the form of a rectifier and the change of condition of the signal receiving relay may bring about a reversal of polarity of the line connections so that the effect of the block or its removal is overcome. This differs from impulsing by reason of the fact that it is the receiving apparatus itself that determines the duration of the release or operation of the signal receiving relay due to the receipt of a signal. The signaling circuit may be normally held open and only closed when it is wanted for use such as is common in telephone systems, and with such arrangements the signal may be transmitted by inserting a rectifier in the circuit at the transmitting end to block the current flow in the line. The signal receiving relay will thus release and on the consequent reversal of the line connections the signal receiving relay tests the line and if a circuit for current is found the signal is accepted but if no such circuit exists then the release is not due to a signal but to some other cause, e. g. an impulse of longer duration or a disconnection and further circuit changes at the receiving point may take place consequent on the longer release of the signal receiving relay.

The reversal is most conveniently accomplished by a reversing relay controlled directly or indirectly by the signal receiving relay. For instance in one arrangement accordingly to the invention, the operation of a key throws a rectifier into the signaling circuit so as to release the signal receiving relay whereby the reversing relay operates and locks independently of any further action by the line signal receiving relay. This arrangement may be used in an automatic telephone system, such as a PABX, for permitting access to be obtained to lines not available by dialling, such as junction lines, by certain or privileged subscribers who are provided at their instruments with a rectifier normally short circuited by a key, a signal receiving relay being operated when a subscriber loops the line and released when the subscriber throws the key to insert the rectifier into the circuit whereupon the reversing relay is operated and locked to disconnect the signal receiving relay and local exchange apparatus and connect the subscriber's line to a junction, the connections now set up being such that the rectifier is conductive to the polarity of the battery connections now obtained so that the subscriber's loop is extended to the junction. Similarly another facility may be given to certain privileged subscribers whereby they may intrude into busy local connections, this facility being provided alone or in addition to the aforementioned facility. For example, the aforementioned signal receiving line relay, after a local connection has been set up and the wanted subscriber found busy, may be released by the insertion of the rectifier into the line circuit, the line relay on release bringing about the operation of a change over relay whereby the line connections are reversed so that the rectifier is conductive and permits the signal receiving relay to re-operate, and also to bring about the operation of the switching relay in the connection to connect the privileged party into the local connection.

In a further arrangement according to the invention in order to distinguish between a signal and an impulse in an impulsing system, the signal may be received on a high-speed signal receiving relay connected in series with an impulse receiving relay of the ordinary type. The release of the high-speed signal receiving relay in response to the insertion of the rectifier into the line circuit brings about the line reversal and the test for the existence of a circuit. If current can flow the signal receiving relay is re-operated before the ordinary impulse relay has time to release. A high-speed reversing relay is connected over back contacts of the high-speed signal receiving relay to a condenser which is charged over the front contact of the signal receiving relay. On release of this latter relay the reversing relay operates by the condenser discharge and locks up if the signal receiving relay re-operates before the reversing relay releases. On the receipt of an impulse this will not occur and the locking circuit will not be closed. The reversing relay or a relief relay thereto may control circuit operations for making effective circuits which are to be dependent on impulse reception. This arrangement of the invention may be employed in a telephone system for giving to certain subscribers access to a group of lines, such as junction lines, not available by dialling, by arranging that during impulsing the said locking circuit is not closed, but is closed in response to a signal whereby a marking circuit is connected to certain outlets in a level of a searching switch which is caused to search for a free one of the outlets.

In a further arrangement of the invention the transmitting end of the line may be connected over oppositely connected rectifiers, one or other of the rectifiers being short-circuited by contacts which on operation remove the short circuit from the one rectifier and impose it on the other. The signal-receiving relay at the receiving end of the line on releasing brings about the operation or release of a reversing relay to reverse the connections of the signal receiving relay to the line so that the said relay will re-operate and so prepare the circuit at the transmitting end for the insertion of the rectifier, at present short-circuited, on the transmission of another signal being required. This arrangement of the invention may be employed in an interacting system, for example, for providing the interaction between synchronous stepping of stepping switches, one being situated at each end of the line, by arranging for the automatic reversal of the rectifier connections at the transmitting point consequent on a discontinuance or reconnection of current in the line.

In a modification of the invention the blocking devices may take the form of resistances included in the signaling circuit at both the transmitting and receiving points, the resistance at the former being normally short-circuited whilst that at the receiving point is effective and of such a value that the signal receiving relay at the receiving point will operate in the signaling circuit when closed. For the transmission of a signal the short-circuit across the resistance at the transmitting point is removed so that the resistance becomes effective and causes the signal receiving relay to release. On release the signal receiving relay is adapted to bring about the short-circuiting of the resistance in the signaling circuit at the receiving point in consequence of which the signal receiving relay re-operates.

The particular arrangements mentioned above are illustrated in detail in the accompanying drawings and are given only as examples of methods whereby the present invention may be carried into effect. In the drawings the arrangements of Figs. 1 and 2 show the invention as applied to providing certain facilities to privileged subscribers in telephone systems of the automatic type, whereas Fig. 3 illustrates an arrangement whereby two step-by-step switches may be stepped in synchronism, and a switch at a receiving point made to assume a position corresponding to the setting of a switch at a transmitting point.

The arrangement illustrated in Fig. 1 of the drawings shows an application of the invention to a private automatic exchange (PAX) or a private automatic branch exchange (PABX), whereby subscribers or only privileged subscribers can obtain access to a junction without the intervention of an operator and/or whereby such privileged subscribers have a right-of-way facility whereby they can intrude at will into a busy local connection.

The arrangements illustrated in Fig. 1, apart from the modifications required to fulfil the features of the present invention, are similar to those described in Fig. 1 of British application No. 5,709/41 and therefore, only those parts of the latter arrangements necessary to enable an shown.

In Fig. 1 at the extreme left of the upper part of the figure is represented a privileged subscriber's instrument TX connected over a pair of line wires to the exchange. This subscriber is shown as being provided with both of the facilities above mentioned, that is, the subscriber can obtain direct access to a junction line to another exchange and can also intrude into a busy local connection.

In one of the line wires is connected a metal rectifier MR which is so connected that it will oppose the flow of current over the line with the normal battery conditions obtaining, that is, with a positive battery connection to the positive line wire and a negative battery potential to the negative line wire. However, this rectifier is adapted to be short-circuited by a key MEK when the key is in its normal or unoperated position. At the exchange the line wires are connected to an auxiliary equipment AE comprising a line relay SR, a diverting relay R, and a change-over relay CO individual to the line. At the extreme right of the upper part of the figure is shown the subscriber's line circuit LC and its connection on the right to the bank contacts of line finders and upwards to the bank contact of connectors of an automatic switching train over which calls are set up automatically.

In the lower part of the figure is represented common apparatus which in its entirety may be identical with that illustrated in the aforementioned application No. 5,709/41, and therefore only a part of the apparatus necessary for the understanding of the present invention is shown. This common apparatus has associated with it a junction over leads ME to another exchange, such as a public exchange. The jack EJ is a line jack on an operator's switchboard by which the operator can make a direct connection to the subscriber TX.

It will be seen that the subscriber's line such as that having the instrument TX is connected over auxiliary equipment AE and the line jack EJ to the line circuit LC which comprises a line relay L and a cut-off relay K, in the manner well known to those skilled in the art. The speaking wires, designated *a* and *b*, the test wire *c*, and the additional wire *d* are connected to contacts in the banks of line finders to the wipers of which are connected the wipers of connectors, the bank contacts of the connectors being multipled and connected to the several extension lines, for example, to wires *a*, *b*, and *c*, of the line having instrument TX. It is to be understood that when the subscriber with the instrument TX desires to make a local call he removes his receiver thereby causing a line-finder to be taken into use and started in search of the calling line. When this line is found the cut-off relay K is operated and the connector linked to the line finder taken into use is prepared to receive dialled impulses. The caller dials the digits of the wanted subscriber's number thereby setting the connector wipers to bank contacts connected to the wanted line and the called extension is rung, all in known manner. Although the arrangements and operations so far described have assumed a single link connection of line finder and connector this has only been done for the sake of simplicity it being possible for an intermediate switching stage or stages to be provided so that the line finder is linked to a selector which responds to the first digit dialled and selects either a connector to take the remaining two digits or a further selector which responds to the second dialled digit to seek out an appropriate connector. For convenience, however, further description will assume the simple line finder-connector link. When the line finder has been set and relay K operated earth is connected in the link circuit to wire *c* to hold relay K and mark the line engaged in the test bank of the connector and the jack EJ. The connector tests the wanted line in the usual manner by applying earth over its test relay to the test wiper, the test relay, if the line is free, operating in series with the cut-off relay and connecting a low resistance earth to the test wire to mark the line engaged. If the line is found busy when tested, wire *c* will be at earth potential and the test relay will not be operated and a busy signal will be reverted to the caller.

In the arrangements shown, any subscriber, if allowed junction calls may, by calling the operator, have his call set up by her, but only some of the subscribers may be provided with the key MEK for setting up junction calls directly. In the latter case the key MEK is operated after the receiver has been removed.

Considering the circuit arrangement of Fig. 1 in detail, it will be seen that when the receiver is removed at instrument TX a circuit is closed from earth over contacts *k*1 in line circuit LC, contacts *co*5, upper pair of contacts of extension jack EJ, contacts *r*2, instrument TX, key MEK, which in its normal or unoperated position short-circuits rectifier MR, contacts *r*3, lower pair of contacts of jack EJ, contacts *co*6, relay SR, contacts *k*2, line relay L to battery. Relays SR and L operate in this circuit. Relay SR at contacts *sr*1 closes a circuit for slow release relay SB over contacts *co*4.

Relay L in the line circuit operates and brings about the operation of line finders to find the calling line, and if the call is a local one it proceeds in the manner previously referred to and in known manner.

If it is a junction call that is required the subscriber does not dial but after the removal of the receiver operates the key MEK to open the short-circuit across rectifier MR. It will be seen that the rectifier MR is so connected as to oppose the flow of current in the circuit above described with the battery connection now prevailing with the result that the current ceases and relay SR releases, and opens the circuit of relay SB but the latter relay being slow to release does not release immediately. On the release of relay SR a circuit is closed from earth over contacts *sr*1, *rw*1, *sb*1, right-hand winding of diverting relay R to battery and relay R operates. Contacts *r*2 and *r*3 disconnect the subscriber's line wires from the line circuit LC and connect them to contacts in the banks 2 and 3 of the junction finder switch JF, the wipers of which are connectable to a junction over leads ME. Contacts *r*5 apply earth to the *c* wire leading to the connector to render the line busy to other calling subscribers and also to operate relay K in the line circuit to remove the battery connections from the line wires at the finder and further to apply an engaging potential to the bush of the jack EJ. A holding circuit for relay R is closed from earth over contacts *co*2, *r*3, the subscriber's loop including rectifier MR, contacts *r*1, *co*1, middle coil of relay R, common lead to the junction finder circuit, contacts *bb*1, relay S to battery. Relay S operates in this circuit and connects up the circuit for the driving magnet of the junction finder switch JF and the switch commences to search for the calling line. This operation and subsequent operations of the junction finder circuit referred to are exactly as described and illustrated in the British application and therefore are not illustrated and described in detail herein.

When the diverting relay R operated, a marking potential over the left-hand winding of relay R, right-hand winding of relay CO and contacts *r*4 was applied to the contact in bank 1 of the switch JF appropriate to the calling line, and when the wiper of this bank meets this contact the marking potential is extended over both windings of relay T in series to an earth potential and relay T operates. Contacts *t*1 change over and thereby open the driving circuit for the switch JF and short-circuit the left-hand high resistance winding and relay CO therefore operates in series with the right-hand low resistance winding of relay T, the potential of the outlet of bank 1 of switch JF being such as to render this outlet busy to other searching junction finders. Relay R also holds operated in this circuit.

Contacts *co*1 open the temporary holding circuit for relay R over its middle winding, but, as just stated, relay R remains held over its left-hand winding. Contacts *co*3 opens a point in a circuit over which busy tone is applied to the calling subscriber in the event of a junction circuit not being available. The remaining contacts of relay CO performs no functions in the operations now being described. By this time relay SB will have released.

A junction line relay (not shown) in the junction finder circuit operates in series with the calling subscriber's loop and the junction line and causes the circuit to be held in the condition just described. If the junction is one leading to an automatic exchange the subscriber can

now proceed to dial the digits of the wanted number in the usual manner.

The circuit remains in this condition until the subscriber replaces his receiver at TX whereupon the said junction line relay releases and brings about the release of relays T, R, and K and the restoration of the circuits to normal.

The operations involved in the exercise by the privileged subscriber of his right-of-way facility for intruding into a busy local connection are as follows. For providing this right-of-way facility the wire *d* at an intermediate distribution frame is connected to a wire running to a bank contact corresponding to the line in the banks of the finder. This circuit includes a contact *k3* of the cut-off relay K. Relay RW is connected to wire *d* and over a locking contact to wire *c*.

The subscriber at TX sets up a local connection to the wanted subscriber in the manner previously referred to. On a line finder flinding the calling subscriber's line, relay K operates and an earth is applied to the *c* wire to lock relay K. Relays SR and SB are operated as before described. The subscriber dials the wanted number, relay SR remaining operated during impulsing owing to the slow releasing characteristics imparted to it by the shunting resistance and capacity.

If the wanted subscriber is free, the call proceeds in the usual manner. If however, the wanted line is busy when the connector is set to the wanted line, a circuit is closed from earth over contacts *rw3*, left-hand winding of relay RW, wire *d*, contacts *k3* and thence over winding (II) of the test relay H of the conneector to battery. Relay RW operates in this circuit, but relay H does not. Relay RW locks over its right-hand writing and contacts *rw2* to the earth on the *c* wire. Contacts *rw1* prepare an operating circuit for relay CO over its left-hand winding, and contacts *rw3* disconnect the original operating circuit of relay RW over its left-hand winding.

The privileged subscriber will receive busy tone, and if he wishes to exercise his right-of-way facility he operates the key MEK to remove the short circuit from rectifier MR. Relay SR releases owing to the introduction of the rectifier MR into the loop whereupon a circuit is closed from earth over contacts *sr1*, *rw1*, left-hand writing of relay CO to battery and relay CO operates. Relay CO locks over contacts *co2* and *rw1* and its left-hand winding. At contacts *co5* and co6 the line connections are reversed resulting in a reversal of the battery connections to the rectifier MR so that current again flows in the line circuit and relay SR re-operates. On the re-operation of relay SR an earth is applied over contacts *sr1* and *co4* to the *d* wire and thence over winding II of the switching relay H in the connection resulting in the operation of this relay and the switching through of the privileged subscriber to the wanted busy line whereby he can speak to the wanted subscriber.

When the conversation is finished and the priviledged subscriber replaces his receiver, relay SR releases together with the line relay in the connector circuit, and the connector circuit restores to normal. On the removal of earth from the *c* wire the cut-off relay K and relay RWare released. At contacts *rw1* relay CO is released. Thus the circuits are restored to normal.

It will be appreciated from the foregoing that a privileged subscriber can be provided with either or both of the above facilities.

The arrangements is illustrated in Fig. 2 of the drawings show the invention as applied to the provision of the privilege to certain subscribers whereby access to a special group of outlets such as a junction group, which are not available by dialling or to other subscribers not so privileged. In this arrangement the subscribers not so privileged. In this arrangement the subscriber having instrument TX is provided with a special access key MEK which when it is not operated short-circuits a rectifier MR; and at the exchange with a line circuit LC including a line switch LS having access to several groups of outlets, some groups being accessible to all subscribers by dialling and another or special group which cannot be reached by dialling but only available to privileged subscribers by means of a signal, other than dialling, originated by the operation of the key MEK to remove the short-circuit from rectifier MR.

Thus the circuit arrangements are required to discriminate between selection by impulsing and a signal originated by a privileged subscriber for obtaining the special group of outlets.

The line switch LS may comprise a step-by-step or a motor driven uniselector, the rectangle LSDM therefore representing either a driving magnet of a step-by-step switch having interrupter contacts in series with it, or the latch magnet of a motor driven uniselector. This arrangement will be fully understood by those skilled in the art without further detailed illustration or description. Also in the line circuit is a coupling relay K, and a switching relay H.

Several of such line circuits are controlled from a control circuit CCC connected in common to them. This circuit CCC includes an impulsing relay A, a signal receiving relay AQ and relay BQ and an auxiliary relay RQ, the three latter relays being of the high speed type. Also the circuit includes release and dialling relays B and C respectively, test and auxiliary test relays T and TA, and a marking relay G. The circuit also includes a digit switch DS having a driving magnet DSDM and interrupter contacts *dsdm*. Two levels *ds1* and *ds2* of the switch are shown, the former being concerned with the marking of groups in the level GL of the line switch LS according to the received digit, whilst the latter is a homing level.

The coupling relay K in the line circuit LC is for coupling the line circuit to the common control circuit when the latter is free and in order to arrange that only one of the line circuits at a time can be coupled to the control circuit, individual connections exist from each of the former through a contact *b2* of the release relay, or a relief relay thereof, in the control circuit, to the operating winding I of the coupling relay so that when the control circuit is engaged by one of the line circuits and the release relay in the control circuit is operated, the operating windings I of the K relays in all of the other line circuits are disconnected.

In the detailed description of the arrangements illustrated the selection of a wanted group accessible to all subscribers by dialling will first be considered.

When the subscriber having instrument TX removes his receiver, a circuit is closed from earth over the left-hand windings of relays A and AQ, contacts *rq1*, *h4*, key MEK, instrument TX, contacts *h3*, and thence over two circuits in par-

allel, one including contacts *b2*, operating winding I of relay K to battery, and the other including contacts *rq2* and right-hand windings of relays AQ and A, to battery. Relays A, AQ, and K operate. Relay K at contacts *k5* applies earth potential to the left-hand end of private wire P to render busy the outlet to the calling subscriber at the final selector, at contacts *k4* prepares a circuit for the locking winding II of relay K, at contacts *k3* prepares for the operation of switching relay H, at contacts *k2* prepares the circuit for the operation of magnet LSDM, and at contacts *k1* prepares a testing circuit for testing for a free outlet in a required group of outlets.

Relay A at contacts *a1* closes an obvious circuit for relay B, which operates, and also a circuit for dialling relay C, the latter extending over the home contact of level *ds2*, interrupter contacts *dsdm*, winding II of relay C, and driving magnet DSDM. Relay C operates in this circuit but magnet DSDM is not sufficiently energised to attract its armature.

Relay B at contacts *b4* prepares an impulsing circuit for magnet DSDM, and at contacts *b3* closes a locking circuit for relay K over its winding II and contacts *k4*. At contacts *b2* and similar contacts of relay B or a relief relay thereof included in the circuits of windings I of relays K in the other line circuits, the operating circuits for relays K are opened so that no other relay K can operate. A circuit is closed over contacts *b1* and *aq1* for fully charging condenser QA, while contacts *b5* close in the circuit for the line switch magnet LSDM, but at this time contacts *c2* open so that this circuit is not yet closed.

Relay C at contacts *c1* further prepares the impulsing circuit for magnet DSDM.

On the release of relay A to the break period of the first impulse, a circuit is closed from earth over contacts *a1*, *b4*, *c1*, winding II of relay C and magnet DSDM to battery, and the magnet energises fully to prepare for stepping the wipers of switch DS.

Relay AQ also releases and at contacts *aq1* connects the condenser QA in series with relays BQ and RQ and these relays being high-speed relays operate in this discharge circuit of the condenser. However, the discharge in the condenser dissipates comparatively rapidly in this circuit and as the charge in condenser QA will dissipate before relay AQ is re-operated no locking circuit for the relays can be closed over contacts *aq2*, and the relays will release before the termination of the break period and re-operation of relay AQ. Under these circumstances the short period for which relay BQ is operated is insufficient to bring about the operation of relay C, which is slow to operate, at contacts *bq1*. This operation will occur at each break period, but without any result. The change over of contacts *rq1* and *rq2* now in the line circuit will have no effect as the line circuit is open at this time.

When relay A re-operates at the end of the break period of the first impulse, the circuit for winding II of relay C and magnet DSDM is opened, and the magnet releases to step the wipers of the switch DS onto the next contacts in their levels. Relay C has the circuit for its winding I broken at the home contact of level *ds2*, but due to being slow to release, remains operated by the energisation of the winding II throughout the impulse train in the usual manner.

The subsequent impulses are registered by the switch DS in a similar manner. On the termination of the impulse train relay C will release whereupon a circuit is closed from earth over contacts *t1*, *c2*, *b5*, *k2* and magnet LSDM to battery. The magnet LSDM energises in this circuit and the wipers of the line switch are stepped.

It will be seen that the contacts in level *ds1* are connected over marking connections to separate groups of contacts to different groups of outlets in the level GL of the line switch, and a further marking circuit is connectible over contacts *g1* for a special group of contacts to another group of outlets. The test relay T is connectible to any one of these former marking connections over the level *ds1*, whereas it is directly connectible to the special marking connection over contacts *g1*.

It will be appreciated that those outlets from the line switch LS that are free will have a battery potential on the outgoing private wire P, whilst those that are busy will have an earth potential on this wire. Thus when the wiper of level P reaches the required group it will search over this group until a free outlet is found whereupon the battery potential on the private wire is extended over contacts *k1*, wiper and contact in level GL, marking connection, contact and wiper level *ds1* right and left-hand windings of relay T in series to earth and relay T will operate. It will be seen that in the case of busy outlets relay T will be short-circuited by the earth potential on the private wire and therefore will not be operated. On the operation of relay T, contacts *t1* short-circuit the left-hand winding of relay T, whereby the potential on the private contact of the outlet is lowered and the outlet thereby marked busy, and also remove the short-circuit from relay TA so that this relay is permitted to operate in series with the magnet LSDM which is not now sufficiently energised to continue the stepping operations.

At contacts *ta1* and over contacts *k3* a circuit is closed for the switching relay H which operates and at contacts *h1* and *h2* locks itself to the earth on the private wire. Contacts *h3* and *h4* release relays AQ and A and extend the positive and negative wires to the circuit ahead wherein a line relay operates to bring about the backward connection of an earth potential to the private wire to hold relay H and busy the subscriber's circuit at the final selector. Relay T is short-circuited by this earth and on release short circuits the relay TA.

When relay A releases, the circuit for relay B is opened and when relay B releases relay K is released at contacts *b3*, and at contacts *b4* a homing circuit is closed for the digit switch DS over its homing level *ds2* and contacts *a1* and *b4*.

Thus the control circuit is restored to normal for immediate use by other calls.

The line circuit remains in the condition with relay H operated until the connection is relinquished when the earth is removed from the private wire resulting in the release of relay H and the restoration of the line circuit to normal.

If a privileged subscriber requires connection to the special group of outlets, after removing his receiver instead of dialling he operates the key MEK and introduces the rectifier MR into the loop circuit. The rectifier MR is so connected that it will not permit current to flow in the circuit with the battery connections now prevailing with the result that relay AQ releases.

At the contacts *aq1* the condenser QA, previously fully charged over contacts *b1* and *aq1* is connected in circuit with relays BQ and RQ

which being fast operating relays operate immediately in the discharge circuit for the condenser. Contacts *rq1* and *rq2* reverse the battery connections to the line through relays AQ and A, these connections now being such that the rectifier MR is conductive and current again flows to re-operate relay AQ. It is to be noted that the cessation of current in the circuit is only for the period it takes for relay RQ to operate and this period will be shorter than the release lag of relay A so that relay A will not release. Contacts *aq2* are arranged to close before or almost immediately after contacts *aq1* break so that relays BQ and RQ are locked in a circuit including contacts *b1*, *bq2* and *aq1*. It will be appreciated that these operations are extremely rapid and the locking circuit is closed before the current in the discharge circuit of condenser QA has fallen below that at which relays BQ and RQ will release, as happened in the previous operations when selection was accomplished by dialling.

On the operation of relay BQ relay G operates, after its slow to operate period, over contacts *by1*, and at contacts *g1* marks the special group of contacts in the level GL of the line switch. Contacts *g2* close the circuit for magnet LSDM and the line switch searches for an outlet in the special group. This and the subsequent operations are as before described and therefore will be fully understood.

The arrangements illustrated in Fig. 3 are diagrammatic in character and indicate one manner of bringing about the synchronised operation of two step-by-step uniselectors and ensuring that such switches always assume a position in line with each other such as may be required when a numerical setting or an operation which may be indicated numerically is to be transmitted from one point to a point remote from it, for example, between a transmitting point TP and a receiving point RP.

In the arrangements illustrated there is provided at the transmitting point TP a uniselector DML having two levels *dml1* and *dml2* and stepping magnet DMLDM, and at the receiving point RP a uniselector DMA having levels *dma1* and *dma2* and stepping magnet DMADM, the requirements being that these uniselectors should always move synchronously and be in line with each other. Both uniselectors are shown as being of the direct drive type, but it will be appreciated by those skilled in the art that they may take any other known form.

The uniselector DML at the transmitting point TP is required to be set in accordance with a marking potential which may be applied over any one of ten marking connections M to individual contacts in level *dml1*, it being arranged that when the wiper of the level is standing on a contact marked over a marking connection a test relay T is operated, the relay being released when the marking is removed from the contact. The relay T in conjunction with level *dml2* controls a switching relay S which is adapted to connect one or other of the rectifiers MRA or MRB in a two conductor line circuit extending between the two points whilst it short circuits the other rectifier. The rectifiers are connected in opposite senses to one another.

At the point RP is an impulse relay A over which battery is fed to the line circuit, and a reversing relay R which is adapted to effect reversals of the battery connections to the line over relay A. Relay R is controlled over level *dma1* and is connected to all of the even contacts in the level. The contacts in level *dma2* are individually connected to signaling devices, such as lamps LD, which correspond in number and position to the marking connections at point TP.

It will be seen that with the circuit in the condition shown, that is, with the switches DML and DMA having their wipers standing on the first contacts in their levels, and assuming that a marking potential exists on the first of the marking connections M relay T will be operated at point TP from the marking potential over level *dml1*, whilst at point RP the first of these indicating devices LD will be energised.

In level *dml2* the odd contacts are commoned together and connected to the back contact of change-over contacts *t1* the front contact of which is connected in common to the even contacts of the level. Thus as relay T is operated and the wiper of level *dml2* standing on the first contact in the level, relay S will not be operated. In consequence contacts *s1* connect rectifier MRB in series with the line circuit and short-circuit rectifier MRA. A circuit therefore exists, from earth over the upper winding of relay A, contacts *r1*, the lower line wire, lower winding of relay L, rectifier MRB, contacts *s1*, upper winding of relay L, upper line wire, contacts *r2*, lower winding of relay A, to battery and relays A and L are operated in this circuit.

Relay A at contacts *a1* maintain open the circuit for the stepping magnet DMADM, and contacts *l1* maintain open the circuit for relay LB.

In the event of the marking potential being removed from the first of the marking connections and applied to a later connection, relay T will be released. At contacts *t1* a circuit is closed for relay S over the first contact in the level *dml2* and relay S operates. At contacts *s1* the rectifier MRA is included in the line circuit in place of rectifier MRB. This rectifier MRA is so connected as to prevent current flow in the line with the battery connections now prevailing and therefore current flow ceases and relays A and L release.

At contacts *l1* an obvious circuit is closed for slow to release relay LB, and relay LB operates preparing a circuit for magnet DMLDM at contacts *lb1*. At contacts *a1* an obvious circuit is closed for the magnet DMADM of the switch DMA and the magnet energises and steps the wipers onto the next contacts (contacts 2) in their levels. The succeeding indicating device LD is operated over level *dma1*. An obvious circuit is closed for relay R over the second contact in level *dma1* and relay R operates. At contacts *r1* and *r2*, the battery connection over relay A to the line is reversed, the connection of the battery to the line being such that the rectifier MRA permits current to flow with a consequence that relays A and L re-operate. On the re-operation of relay L the circuit of relay LB is opened and a circuit is closed during the release period of relay LB over contacts *l1* and *lb1* for the magnet DMLDM and the magnet energises to step the wipers of switch DML onto the next contacts in their levels.

If the wiper of level *dml1* meets a marking potential on this next contact, relay T re-operates, and at contacts *t1* connects an earth over the second contact in level *dml2* to relay S to maintain this relay operated, the relay S remaining operated during the change over of contacts *t1*.

Thus the two switches are lined up with each other, the wipers of both being positioned on the second contacts in their levels.

If a marking potential had not been found on

the second contact of level *dml1*, relay T would not have re-operated, and in consequence at wiper *dml2* the circuit for relay S would have been opened and relay S released. At contacts *s1* rectifier MRB would again be connected in the line and current flow therein would cease and relays A and L be released with a consequential stepping of the switches as before described. Such operations would continue until the marked contacts in level *dml1* is found and relay T operated, the circuit coming to rest with relay S either operated or released. Thus in effect the two switches DML and DMA interact with and control the stepping of one another.

A modification of this arrangement can be made for working over a single line wire with earth return. For example, two rectifiers may be individually connectable in opposite senses to the line wire over a reversing contact (such as a contact of relay S) and at the other end of the line the line relay (such as relay A) has a single coil thereof connected in series with the line and is connectable over reversing contacts (such as contacts of relay R) to one or other of two oppositely connected batteries. The operation of such a simple arrangement with what has been described before will be fully understood.

A further manner in which the present invention may be employed for discriminating between an impulse of a regular impulse train and a signal is to provide that the signal consists of a break period of the line circuit longer than the break period of an impulse. For example, the line relay connected to the line over reversing contacts of a reversing relay, may operate the usual release relay which remains operated during the break periods of the impulses of an impulse train. The circuit of the reversing relay will include break contacts of the release relay, these contacts remaining open so long as the release relay is operated, and closing to complete the circuit of the reversing relay when the release relay releases, the reversing relay thereupon operating and locking. The reversal of the line circuit by the reversing relay will bring about the operation of the line relay and of the release relay. The application of such an arrangement in practice will be appreciated by those skilled in the art.

I claim:

1. In a signaling system, a transmitting point and a receiving point interconnected by a signaling circuit, means at said receiving point so controlled over said circuit as to cause said means to occupy a certain position, a unidirectional current conducting device at said transmitting point, means for including said device in said circuit thereby to cause said first means to leave said certain position, and other means controlled by said first means upon leaving said certain position for altering the connections of said signaling circuit at said receiving point thereby to cause said first means to be controlled over said circuit to resume said certain position despite the presence of said device in said circuit.

2. A signaling system as claimed in claim 1, wherein said other means is effective to alter the connections of said signaling circuit only if the position of said first means remains changed for a predetermined interval of time.

3. In a signaling system, a transmitting point and a receiving point interconnected by a signaling circuit, a unidirectional current conducting device at said transmitting point, means for connecting said device into said circuit, a relay at said receiving point occupying a certain position and controlled over said circuit to change its position responsive to said device being connected into said circuit, means operated by said relay upon changing its position for altering the connections of said signaling circuit at said receiving point thereby to cause said relay to be controlled over said circuit to resume said certain position despite the presence of said device in said circuit, and said relay effective upon resuming said certain position to cause said last means to maintain said circuit connections altered so that said relay will remain in said certain position.

4. In a signaling system, a transmitting point and a receiving point interconnected by a signaling circuit, a unidirectional conducting device at said transmitting point, means for causing direct current to flow over said circuit, means for including said device in said circuit thereby to block the flow of said direct current thereover, and means at said receiving point operated responsive to the cessation of said current flow over said circuit to cause direct current to resume flowing over said circuit despite the presence of said device therein.

5. In a signaling system, a transmitting point and a receiving point interconnected by a signaling circuit, a unidirectional current conducting device at said transmitting point, a charged condenser at said receiving point, means for causing direct current to flow over said signaling circuit, means for including said device in said circuit to block the flow of current thereover, means at said receiving point operated responsive to the cessation of said current flow over said circuit to cause said condenser to discharge, a relay operated by the discharge of said condenser and effective thereupon to alter the connections of said signaling circuit at said receiving point, whereby direct current is caused to resume flowing over said circuit despite the presence of said device therein, said third means operated responsive to said resumption of current flow and thereupon effective to maintain said relay operated independently of the discharge of said condenser.

6. In a signaling system, a unidirectional current conducting device, a charged condenser, a signaling circuit, a source of direct current voltage connected to said circuit for causing current to flow thereover, means for at times opening said circuit to interrupt the flow of said current, means for at other times including said device in said circuit to block the flow of said current, means operated responsive to a cessation of the current flow over said circuit to cause said condenser to discharge, a relay operated by the discharge of said condenser and effective upon operation to reverse the connection of said source to circuit whereupon current will resume flowing over said circuit if said cessation was caused by said device being included therein, and a locking circuit for said relay completed by said third means only if said current flow is resumed before the charge on said condenser is dissipated.

7. In a signaling system, a unidirectional current conducting device, a signaling circuit, a source of direct current voltage connected to said circuit for causing current to flow thereover, means for at times opening said circuit to interrupt the flow of said current, means for at other times including said device in said circuit to block the flow of said current, means operated responsive to the cessation of said current flow to reverse the connection of said source to said circuit whereupon current will immediately resume

flowing if said cessation was caused by said device being included in said circuit, said last means effective only if said current flow is thus immediately resumed for maintaining the connecton of said source reversed for so long as the current flow over said signaling circuit persists.

8. In a signaling system, a transmitting point and a receiving point interconnected by a signaling circuit, means for causing current to flow over said circuit, two separate means at said transmitting point for interrupting the flow of current over said circuit, a device at said receiving point operated responsive to a cessation of said current flow and effective upon operation to cause current immediately to resume flowing over said circuit if said cessation was caused by the operation of a particular one of said interrupting means, said device being ineffective to cause the current to resume flowing over said circuit if said cessation was caused by the operation of the other one of said interrupting means.

9. In a signaling system, a transmitting point and a receiving point interconnected by a signaling circuit, means for causing current to flow over said circuit, two separate means at said transmitting point for interrupting the flow of current over said circuit, a device at said receiving point operated responsive to a cessation of said current flow and effective upon operation to cause current immediately to resume flowing over said circuit if said cessation was caused by the operation of a particular one of said interrupting means, said device being ineffective to cause the current to resume flowing over said circuit if said cessation was caused by the operation of the other one of said interrupting means, and another device at said receiving point operated responsive to a cessation of the current flow in said signaling circuit if said cessation is of predetermined duration, the immediate resumption of said current flow under control of said first device being effective to prevent said last device from operating if the cessation was caused by operation of said particular one of said interrupting means.

10. In a signaling system, a signaling circuit, a device having two positions, means controlled by said device when it occupies one of said positions to render said circuit transparent to current tending to flow thereover in one direction and opaque to current tending to flow thereover in the opposite direction, said means controlled by said device when it occupies the other of said positions to render said circuit opaque to current tending to flow thereover in said one direction and transparent to current tending to flow thereover in said opposite direction, a source of direct current connected to said circuit, means operated responsive to a flow of current over said line from said source to reverse the position of said device thereby to terminate the flow of said current, and other means operated responsive to a cessation of the flow of current over said circuit from said source to reverse the connections of said source to said circuit thereby to cause current from said source to resume flowing over said circuit.

11. In a system as claimed in claim 10, means effective at times to prevent said second means from reversing the position of said device responsive to a flow of current over said circuit.

12. In a signaling system, a transmitting point and a receiving point interconnected by a signaling circuit, a device at said transmitting point having two positions, means controlled by said device when it occupies one of said positions to render said circuit transparent to current tending to flow thereover in one direction and opaque to current tending to flow thereover in the opposite direction, said means controlled by said device when it occupies the other of said positions to render said circuit opaque to current tending to flow thereover in said one direction and transparent to current tending to flow thereover in said opposite direction, a source of direct current connected to said circuit, means at said transmitting point operated responsive to a flow of current over said line from said source to reverse the position of said device thereby to terminate the flow of said current, means at said receiving point operated responsive to a cessation of the flow of current over said circuit from said source to reverse the connections of said source to said circuit thereby to cause current from said source to resume flowing over said circuit, said last two means interacting to cause current to flow over said circuit pulsatingly, a switch at said transmitting point operated step-by-step under control of the pulsations of current in said circuit, and a switch at said receiving point operated step-by-step under control of the pulsations of current in said circuit.

13. In a system as claimed in claim 12, means for marking any position of one of said switches, and means effective whenever said switch occupies the marked position to prevent said second means from reversing the position of said device responsive to a flow of current over said circuit.

14. In a telephone system, an exchange, a plurality of subscribers' stations each connected to said exchange by a line, switching apparatus at said exchange accessible to all of said stations, an impulse sender at each station for controlling said apparatus to extend calls thereover, other switching apparatus at said exchange inaccessible to certain of said stations, each of the remaining stations having a unidirectional current carrying device and means for including said device in the line outgoing from that station to said exchange, and means responsive to the inclusion of any one of said devices in its associated line for seizing said other switching apparatus.

15. In a telephone system wherein connections between calling lines and called lines are extended over automatic switching apparatus and wherein said apparatus includes means normally preventing the completion of a connection to any called line which is already engaged in another connection, a unidirectional current carrying device associated with a calling line, means for including said device in said calling line if the completion of a connection from that calling line to a called line is prevented due to said called line already being engaged, and means in said switching apparatus operated responsive to said device being included in said calling line and effective upon operation to cause the completion of said connection from said calling line to said engaged called line.

ERIC WESTALL DURKIN.