Feb. 14, 1967 W. S. POWELL 3,303,750

PUMP MOTORS

Filed April 1, 1965 2 Sheets-Sheet 1

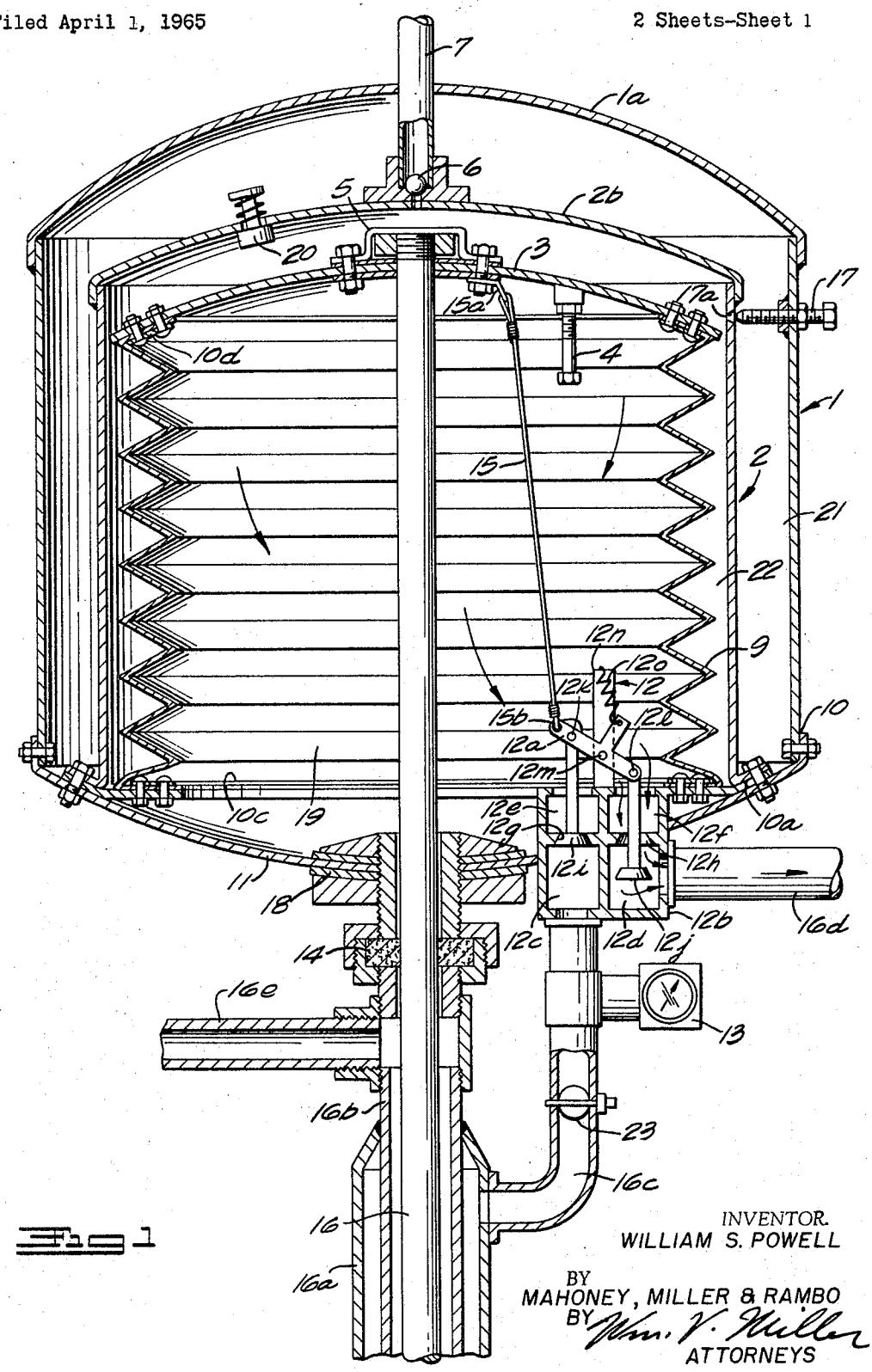


Fig 1

INVENTOR.
WILLIAM S. POWELL

BY
MAHONEY, MILLER & RAMBO
BY Wm. V. Miller
ATTORNEYS

Feb. 14, 1967 W. S. POWELL 3,303,750

PUMP MOTORS

Filed April 1, 1965 2 Sheets-Sheet 2

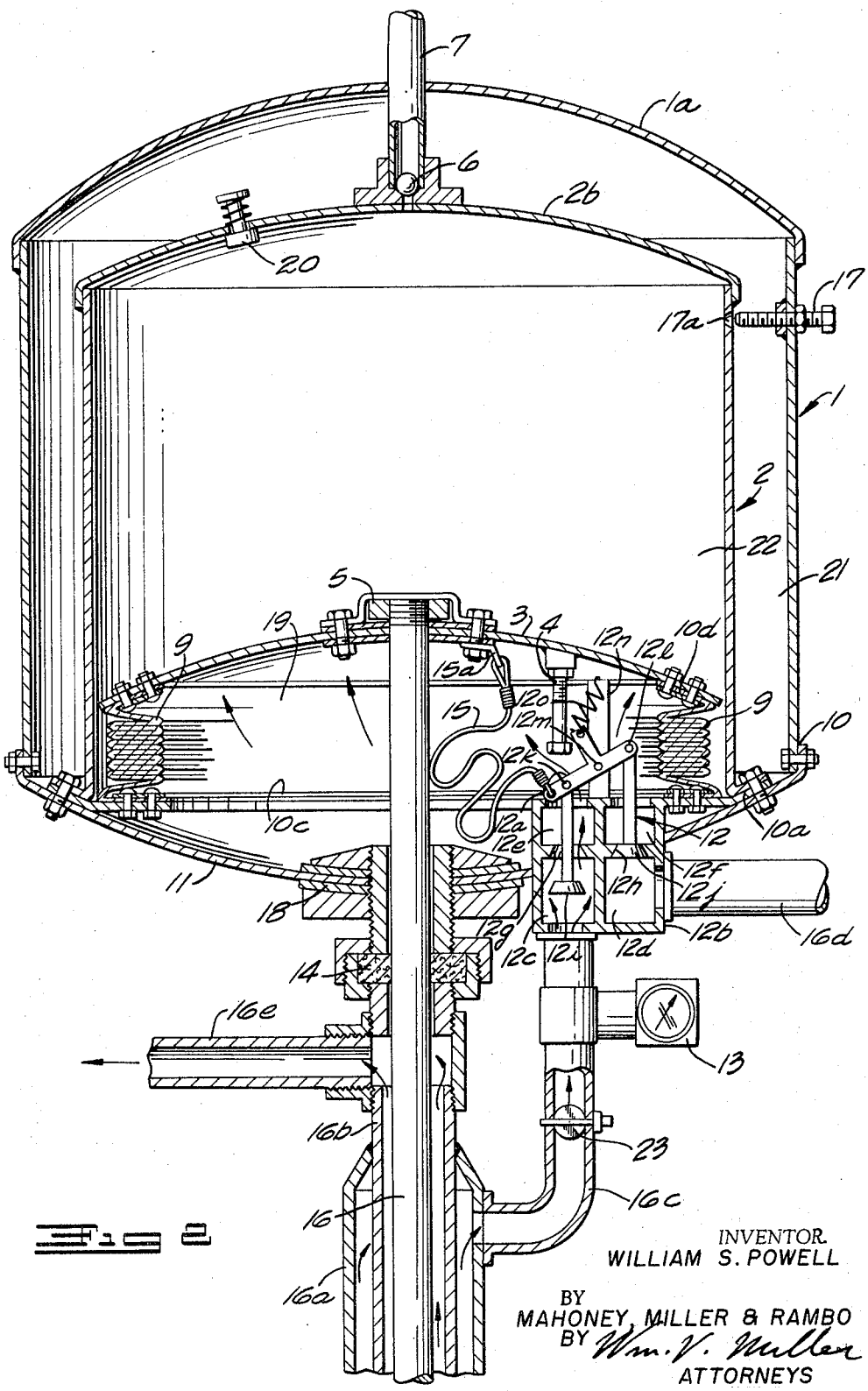


Fig 2

INVENTOR.
WILLIAM S. POWELL

BY
MAHONEY, MILLER & RAMBO
BY Wm. V. Miller
ATTORNEYS

United States Patent Office 3,303,750
Patented Feb. 14, 1967



3,303,750

# PUMP MOTORS

William S. Powell, R.F.D. 2, Granville, Ohio 43023

Filed Apr. 1, 1965, Ser. No. 444,698
12 Claims. (Cl. 91—273)

My invention relates to a well pumping unit and particularly to an apparatus useful in pumping liquid from a well in which natural gas is present or accumulates at intervals, for example, from an oil well. The pump of my invention will pump the oil up from the well into a storage tank or pipe line or any other selected remote location. According to my invention, preferably the pressure of the natural gas in the well is used as the pump-actuating means rather than a fuel-burning motor or an electric motor thereby resulting in an economical and automatic pumping apparatus.

With many oil wells, especially those that are low-producing, it is important that pumping apparatus be employed which will operate very economically and preferably only at necessary intervals to handle the accumulation of oil in the well. This accumulation usually occurs with an increase in natural gas pressure in the well. In the past, it has been the practice with low-producing wells to have pumps which are actuated by internal combustion engines. Therefore, it is usually necessary to have a man travel through an area, manually start each pump motor and wait for a period while the pump lifts from the well the accumulation of oil, and then stop the motor. If electrically-actuated pumps are used, it is necessary to run electric lines to the pump site, which, even if available, are costly, and also to manually start and stop the motor. The electric motors or the internal combustion motors can be equipped with automatic starting and stopping systems but these are costly and not fool-proof and add to the maintenance cost of the electric or internal combustion motors. Also, they still require the consumption of relatively expensive fuel or electric current. Hydraulic pumping units have also been provided in the past but these are also too expensive to install, operate and maintain, especially for low-producing wells. All of the above-discussed factors are particularly pertinent in connection with the low-producing wells to make the recovery of oil therefrom economical.

It is, therefore, the main object of my invention to provide a fluid-actuated well-pumping unit which is of simple, economical, rugged and long-lasting construction and which preferably employs natural gas accumulations in the well as the pump-actuating fluid medium and, consequently, which makes unnecessary the expenditure of combustible fuel or electric current to actuate the pump.

Another object of this invention is to provide a well-pumping unit of the type indicated which is provided with a control arrangement so that it will be started and stopped automatically under control of the accumulation of natural gas in the well and, therefore, will only operate when the well needs pumping but will automatically function during those periods.

Still another object of this invention is to provide a well-pumping unit which is not only fluid-actuated, preferably using the natural gas in the well as the actuating medium, but is also preferably equipped with a vacuum ballast counterbalance arrangement for the pump rod string of the well which is created upon initial operation of the fluid-actuated pump.

Various other objects will be apparent.

As indicated, my pumping unit is designed to utilize fluid pressure and preferably the natural gas pressure in the well as the pump-actuating medium. This gas pressure is usually present between the oil pump line and the casing. It is utilized, according to my invention, by leading it through proper piping and control valves, including a quick-acting reversing valve, into the expansion chamber within a bellows which is operatively connected to the pump rod string of the well. Expansion of this bellows by the admitted natural gas will lift this pump rod string and operate the pump in the well and, under the control of the reversing valve, exhaust of gas from the bellows will be started near the end of the upstroke so that the weight of the rod string will cause the bellows to collapse to its original down or starting position. In addition, a vacuum chamber is provided around the bellows and means is provided for pumping out that chamber during the initial operation of the pumping unit, and later if needed, so as to create a vacuum ballast force in that chamber which will act on the bellows as a counterbalance force for the pump rod string.



In the accompanying drawings, I have illustrated a preferred embodiment of my invention and in these drawings:

FIGURE 1 is a vertical schematic sectional view of the fluid-actuated pumping unit of this invention showing it in its up position.

FIGURE 2 is a similar view but showing the unit in its down position.

With particular reference to the drawings, the pumping unit of my invention includes an outer housing or case **1** which is preferably of steel and is of annular horizontal cross section with an upper convex or dome-shaped top **1***a* and a lower concave bottom or base **11** which is connected thereto at a sealed but separable annular joint **10**. The case **1** is made sufficiently strong to resist outside atmospheric pressure even when the space within it is evacuated to a low degree. The pumping unit is mounted directly on the well on the casing **16***a* and the base **11** is of such strength that it can support the entire pump assembly including the pump shaft or sucker rod **16**, the pump cylinder (not shown) and the column of oil in the oil pipe **16***b*, the assembly being supported from the base **11** by a suitable collar and seal arrangement **18**. Leading from the oil pipe **16***b* is an oil discharge line **16***e* which will conduct the oil pumped from the well to a pipe line or storage tank. A suitable oil well pump rod seal is indicated at **14** for providing a fluid seal around the rod **16** directly below the seal **18**. Gas from the casing **16***a* will enter into a branch line **16***c* which is connected thereto and which is controlled manually by a valve **23** which may be a standard gas key or any other valve that can be manually set for a selected flow.

Within the outer case **1** is another case **2** of inverted cup-like form and of the same general outline as the outer case **1** to provide therewithin an inner chamber **22** in which the bellows **9** is disposed. The case **2** is spaced from the corresponding sides and top of the outer case **1** to provide an outer chamber **21** which may be termed a plenum chamber and which is closed to the atmosphere. The lower edge of this case **2** engages the upper surface of the bottom or base **11** along an annular separable sealing and connecting joint **10***a*.

The upper dome-shaped top **2***b* of the case **2** is provided with an exhaust outlet controlled by a ball-check valve **6** which is preferably gravity-seated. This ball and associated seat is located at the lower end of a vertical tube **7** which has its lower end sealed to the top **2***b* and its upper end passing upwardly through a sealed opening in the top **1***a* of the case **1**. Thus, the bellows-enclosing inner chamber **22** can communicate with the atmosphere through this tube **7** under the control of the ball-check valve **6**. An additional valve port is provided in the top **2***b* and is under the control of a spring-biased valve **20** in which the spring will act upwardly in the closing direction. Positive pressure in the inner chamber **22** will serve to seat it upwardly whereas negative pressure therein,

when sufficiently low, will tend to unseat it. A valve port 17*a* is provided in the side wall of the case 2 and is shown under the control of a manually adjustable needle valve 17 which is adjustable from the exterior of the case 1. These valves 17 and 20 will control communication between the chambers 22 and 21 and are the only passages therebetween.

The bellows case 2 has the annular bellows 9 disposed therein for vertical expansion and contraction relative thereto and this bellows has the gas-receiving chamber 19 formed therewithin. This bellows may be formed of a suitable strong flexible material, such as nylon reinforced neoprene, or other material which can be molded into proper shape and will adequately withstand gas pressure, oil fumes and the necessary repeated flexing and folding without losing its shape or otherwise quickly deteriorating. The lower end of this bellows may be sealed to a ring 10*c* which is attached to the base 11 at the separable joint 10*a* and its upper edge may be attached to the steel cap or head 3 of the bellows at a separable sealed joint 10*d*. This cap or head 3 is preferably dome-shaped to conform to the shape of the cap 2*b* of the case 2 and is sufficiently strong to lift the pump shaft 16 and the column of oil. It is connected at a connecting and sealing unit 5 of a suitable type, to the upper end of the pump shaft 16 so as to provide the lifting capacity to carry the weight of the pump shaft and associated pumping parts and the oil being lifted in the pumping operation.

The cap 3 is also provided with a depending valve-actuating stud 4 which is screwed upwardly into a threaded socket in the cap for relative vertical adjustment. This stud 4 is one of the means for actuating the quick-acting control or reversing valve indicated generally at 12. Another means for actuating this valve is provided by a flexible actuating pull-producing connection between the valve 12 and the cap 3 and is shown as comprising a line 15 which may be of suitable flexible material such as stainless steel wire, cable or rope, and which is connected to the lower side of the cap 3 at a connection 15*a* and to one end of a lever 12*a* of the valve at 15*b*.

The valve 12 may be termed a positive flip-flop or snap-action valve and will be instantaneous in its action as the bellows head 3 approaches the upper and lower limits of its stroke. It is provided with intake and exhaust ports connected to the bellows chamber 19. It can be any of the quick-acting types commonly available and must be capable of instantly opening the exhaust valve port as the intake valve port is closed at the top of the bellows stroke and, in like manner, of instantly closing the exhaust valve port and opening the intake valve port at the bottom of the stroke. The valve 12 is mounted on the bottom 11 and the ring 10*c* and for illustrative purposes is shown as including a housing 12*b* which is divided into four chambers comprising the lower chambers 12*c* and 12*d* and the upper chambers 12*e* and 12*f*. The lower inlet chamber 12*c* connects with and receives gas from the pipe 16*c*. The lower outlet chamber 12*d* connects to a low-pressure gas line 16*d* which will conduct the gas to a point of use or vent it to the atmosphere and which may be provided with a suitable check-valve. The upper chambers 12*e* and 12*f* communicate directly with the chamber 19 within the bellows 9. Between the chambers 12*c* and 12*e* is a valve seat 12*g* and between the chambers 12*d* and 12*f* is a valve seat 12*h*.

The details of the valve-actuating mechanism may vary but the mechanism is shown as comprising upwardly seating valve members 12*i* and 12*j* for cooperating with the respective seats 12*g* and 12*h* on the lower end of stems which pass upwardly into the chamber 19 and are pivotally connected to the valve lever 12*a* at the respective points 12*k* and 12*l* adjacent its opposite ends. The lever 12*a* is pivoted for vertical swinging movement at point 12*m* intermediate its length to a fixed support 12*n* upstanding in the chamber 19. An off-center snap-acting spring arrangement of the usual type is indicated for quickly snapping the valve lever 12*a* in each of its two respective final positions after it is actuated or triggered by either line 15 or stud 4. This arrangement is shown as comprising a compression spring 12*o* connected between the upper projecting end of the support 12*n* and the upper end of an upstanding arm which is disposed on the valve lever 12*a* in alignment with the pivot 12*m* thereof. The valve member 12*i* cooperates with the seat 12*g* to provide an intake valve and the valve member 12*j* cooperates with the seat 12*h* to provide an exhaust valve for the bellows expansion chamber 19 and these valves are alternately opened and closed.

The gas line 16*c* which conducts gas from the well to the valve 12 preferably is provided with a flow control valve unit 13, which is of a suitable type, including a timing device which will automatically open and close at timed intervals to supply the actuating gas pressure for the pump. For wells that require intermittent pumping, the timing mechanism of the valve 13 may be of the pressure-operated type so as not to require the manual winding of a spring-type valve.

If insufficient gas pressure is present in the well to operate the pump, a source of air pressure, such as a motor or engine (not shown), may be used for supplying the necessary actuating pressure. Also, if the pump is not to be equipped with the vacuum ballast counterbalance arrangement, and the usual mechanical counterbalance is connected to the pump (not shown) the case 1 will be eliminated and the case 2 will open continuously to the atmosphere. In this latter example, the case 2 would serve only as a protective cover for the bellows 9.

The pumping unit, as shown, will operate normally in the manner now to be described, assuming that the air has been substantially removed from the inner chamber 22 and the outer chamber 21 in a manner to be described later. Also, assuming the manual valve 23 in the gas line 16*c* is open, the valve 13 will open automatically at preselected intervals to supply gas pressure at the valve 12. Also assuming the bellows 9 is in its lowermost or collapsed condition, as shown in FIGURE 2, and the valve 12 is in the condition illustrated with the inlet valve member 12*i* unseated and the exhaust valve member 12*j* seated, the gas under pressure will flow past the valve seat 12*g* into the bellows expansion chamber 19 within the bellows 9 thereby causing the bellows to expand upwardly and lift the pump rod 16. The valve member 12*j* at this time will be seated to cut-off connection of the bellows expansion chamber 19 with the gas line 16*d*. The bellows cap 3 will be moved upwardly in the case 2. As the bellows 9 nears the extent of its expansion and the cap 3 approaches the extent of its upward movement to a level adjacent the cap 1*a*, the flexible line 15 is completely extended and will exert a pull on the valve lever 12*a* and trigger the valve mechanism so that, as shown in FIGURE 1, it will snap the valve into its other position where the inlet valve member 12*i* is seated and the exhaust valve member 12*j* is unseated. This will instantly interrupt flow of gas from the gas line 16*c* into the expansion chamber 19 within the bellows 9 but will connect that chamber to the gas receiving line 16*d*. The gas within the chamber 19 will now quickly escape past the valve seat 12*h* to the gas line 16*d* and this will instantly stop expansion of the bellows 9 and upward movement of its cap 3 and immediately permit the weight of the rod 16 and suspended pump parts to exert a gravity pull on the bellows cap 3 and cause the bellows 9 to collapse. As the bellows cap 3 approaches its lowermost position, the stud 4 will strike the valve lever 12*a* and trigger the valve-actuating mechanism to cause it to snap the valve again into the position shown in FIGURE 2 at which time the gas supply line 16*c* will again be connected to the bellows expansion chamber 19 and the gas receiving line 16*d* will be disconnected therefrom at the reversing control valve 12.

The above-indicated cycle normally will be repeated over and over so that as the bellows cap 3 reaches a pre-

determined height, the actuator **15** for the valve **12** causes it to close the input valve port thereof and at the same instant open the exhaust valve port thereof allowing the bellows **9** to collapse as the weight of the pump shaft **16** and associated parts draws it down to the starting position and as it nears that position, the actuator **4** for the valve causes it to close the exhaust valve port and open the intake valve port thereby starting another cycle and continuing these cycles until the timer valve **13** or the manual valve **23** is closed to interrupt the flow of gas to the valve **12**.

As previously indicated, it is preferred to have a vacuum ballast or counterbalance arrangement for counterbalance of the pump rod string which usually has its deadweight counterbalanced mechanically. For this purpose, the outer plenum chamber **21** is provided, in conjunction with the inner chamber **22**, by enclosing the case **2** within the case **1** and providing the cooperating valve arrangements described above including the valves **6**, **17** and **20**. In the initial operation of the pump, the valve **17** is closed manually. As the bellows cap **3** rises, it forces air or gas in the inner chamber **22** out past the valve **6** to the atmosphere. Also, the valve **20** is closed by positive pressure in the chamber **22**. Both the bellows expansion chamber **19** and the plenum chamber **21** will not communicate with the atmosphere on the up stroke of the bellows but the inner chamber **22** will exhaust thereto through the valve **6**. As the bellows **9** collapses and the cap **3** thereof moves downwardly, a negative pressure is created in the inner bellows enclosing chamber **22** above the cap **3**. The resulting pressure differential, caused by this pumping-out operation, between the positive gas pressure beneath the cap **3** and the negative pressure above the cap **3**, when the cap reaches its lowermost position, will serve as a counterbalance force which will aid in counterbalancing the pump rod **16** and weight suspended therefrom, and in starting the up or expansion stroke of the bellows.

The control valve **17**, between the outer plenum chamber **21** and the inner bellows-enclosing chamber **22**, regulates an exchange of the negative pressure air between them after the initial starting of the pump and the resulting build-up of the vacuum or negative pressure. When the pump is first started, the valve **17** may be closed manually, as indicated above, to prevent air or gas from entering the outer chamber **21** through the valve port **17***a*. The bellows **9** will pump out air from the inner chamber **22** on the upstroke, through the valve **6**, and will draw air from the outer chamber **21** on the downstroke, through the spring-loaded valve **20**. Before the negative pressure in the inner chamber **22** is of a degree sufficient to stop the downward motion of the bellows head **3**, the valve **17** is gradually opened manually until a regular reciprocating cycle of the pump occurs and this can be controlled in frequency by a balancing of the manual gas or air valve **23** and the manual control valve **17**. The negative pressure above the cap **3** is created during pump-out of air as the bellows collapses to provide a void space in the inner chamber **22** without drawing air from the atmosphere, since during the downstroke, the chamber **22** only communicates with the outer plenum chamber **21**, through the valve **20** which opens at a selected negative pressure therein. The valve **20** will close, when for any reason, during the operation of the pump, the pump loses its prime or air finds its way into the inner chamber **22** creating a positive pressure therein. Thereafter the bellows assembly can pump out the air through the escape ball check valve **6** to the atmosphere until the partial vacuum is built up in both the inner chamber **22** and the outer chamber **21** to provide the counterbalance effect.

The use of the bellows arrangement in an oil-well pumping apparatus is particularly important due to the nature of that operation. It is important to have equipment which will resist surface erosion by chemicals present in the gas in the well heads and the bellows may be made from material which meets this requirement. Also, the material of the equipment must resist abrasion by the abrasive sand and other materials brought up on the well head sucker rod and the material of the bellows meets this requirement. Also, the large area volume required for effectively utilizing the energy in the expandable gas and the oil head pressure must be great and this can be accomplished with the bellows without undue bulk and weight, which would be necessary with a piston and cylinder arrangement. Also, the piston to cylinder sliding contact areas for a large pumping unit of this type would be very great and there would be danger of fluid by-pass at these areas from one side of the piston to the other, whereas this would not be present in a bellows unit since the bellows provides a completely enclosed unit except at the connected pump rod.

Various other advantages will be apparent.

Having thus described my invention what I claim is:

**1.** A well-pumping unit for use on a well head having a pump rod extending therefrom comprising a support adapted to be disposed at the well head, an expansible bellows mounted on said support and having a fluid-receiving expansion chamber therewithin, said bellows including means for connecting it to said rod, a fluid inlet for conducting actuating fluid into said chamber for expanding said bellows and a fluid outlet for exhausting fluid from said chamber to permit collapse thereof, a reversing valve means for alternately closing said inlet and opening said outlet and opening said inlet and closing said outlet, and control means operatively connected to said bellows for actuation thereby to control said valve in accordance with the expansion and collapse of said bellows.

**2.** A well-pumping unit for use on a well head having a pump rod extending upwardly therefrom comprising a base support adapted to be disposed at the well head with the rod extending slidably upwardly therethrough, an expansible bellows mounted on said base support, a cap on the bellows having means for connecting it to said rod, a fluid inlet for conducting actuating fluid into said chamber for expanding said bellows and a fluid outlet for exhausting fluid from said chamber to permit collapse thereof, a reversing valve means for alternately closing said inlet and opening said outlet and opening said inlet and closing said outlet, and control means connected to said bellows cap to control said valve in accordance with the vertical movement thereof produced by expansion and collapse of said bellows.

**3.** A well-pumping unit according to claim **2** in which said valve means comprises actuating means having a snap-action for moving it into either of two positions when triggered by said valve control means, said control means comprising a flexible line connected between said actuating means and said cap for triggering it as the bellows cap nears its uppermost position caused by expansion of the bellows to close said inlet and open said outlet and contacting means carried by said cap and engaging said valve actuating means for triggering it as the cap nears its lowermost position caused by collapse of the bellows to open said inlet and close said outlet.

**4.** A well-pumping unit according to claim **2** including an inner case enclosing said bellows and cap to provide an inner fluid chamber, an outer case enclosing said inner case to provide an outer fluid chamber, a passageway leading from said inner chamber to the atmosphere and having a one-way vent valve therein for permitting exhaust from said inner chamber as the bellows expands to move the cap upwardly therein but preventing intake of atmospheric air as the bellows collapses to move the cap downwardly in said inner chamber, and valve means controlling communication between said inner chamber and said outer chamber for pumping air from said chambers and expelling it to the atmosphere through said vent valve by operation of said bellows.

**5.** A well-pumping unit according to claim **4** in which

said last-named valve means includes spring-pressed means and manually adjustable means.

6. A well-pumping unit according to claim 5 in which said spring-pressed valve means opens under a selected negative pressure in said inner chamber and closes under positive pressure in said chamber.

7. In combination with a well having pumping means including a pump rod extending from the head thereof, a gas supply line leading from the well and a gas receiving line; a support mounted at the well head, an expansible bellows mounted on said support and having an expansion chamber therewithin, means connecting said bellows to said pump rod so that expansion and collapse of the bellows will reciprocate said rod, a gas inlet leading from said gas supply line into said chamber and a gas outlet leading from said chamber to said gas receiving line, a reversing valve means for alternately closing said inlet and opening said outlet and opening said inlet and closing said outlet, and control means operatively connected to said bellows for actuation thereby to control said valve in accordance with the expansion and collapse of said bellows.

8. The combination of claim 7 including a timing valve connected to said gas supply line for controlling the supply of gas at timed intervals to said inlet.

9. The combination of claim 7 in which said means for connecting the bellows to said pump rod comprises a cap on the bellows vertically movable upon expansion and collapse of the bellows, said valve control means being connected to said cap to control said valve in accordance with the vertical movement thereof produced by expansion and collapse of said bellows.



10. The combination of claim 9 including an inner case enclosing said bellows and cap to provide an inner fluid chamber, an outer case enclosing said inner case to provide an outer fluid chamber, a passageway leading from said inner chamber to the atmosphere and having a one-way vent valve therein for permitting exhaust from said inner chamber as the bellows expands to move the cap upwardly therein but preventing intake of atmospheric air as the bellows collapses to move the cap downwardly in said inner chamber, and valve means controlling communication between said inner chamber and said outer chamber for pumping air from said chambers and expelling it to the atmosphere through said vent valve by operation of said bellows.

11. The combination of claim 10 in which said last-named valve means includes spring-pressed means and manually adjustable means.

12. The combination of claim 11 in which said spring-pressed valve means opens under a selected negative pressure in said inner chamber and closes under positive pressure in said chamber.

**References Cited by the Examiner**

UNITED STATES PATENTS

| | | | |
|---|---|---|---|
| 862,867 | 8/1907 | Eggleston. | |
| 2,110,393 | 3/1938 | Edwards | 60—52 |
| 2,408,075 | 9/1946 | Kowalski et al. | |
| 3,012,513 | 12/1961 | Knox | 103—52 |


ROBERT M. WALKER, *Primary Examiner.*