United States Patent [19]

Weikert

[11] **3,812,572**

[45] **May 28, 1974**

[54] **TUBE APPLICATOR**

[76] Inventor: **Roy J. Weikert,** c/o General Films, Inc., Covington, Ohio 45318

[22] Filed: **Feb. 14, 1973**

[21] Appl. No.: **332,373**

[52] **U.S. Cl.** ..... **29/208 B,** 29/421

[51] **Int. Cl.**..... **B23p 19/04,** B23q 7/10, B23p 17/00

[58] **Field of Search**.. 29/208 B, 421, 208 D, 208 R, 29/211 D; 53/29

[56] **References Cited**

UNITED STATES PATENTS

2,479,702	8/1949	Rood	29/421 X
3,170,231	2/1965	Gleason	29/208 B

Primary Examiner—Thomas H. Eager

Attorney, Agent, or Firm—Biebel, French & Bugg

[57] **ABSTRACT**

Method and apparatus for attaching a dispensing tube to the side wall of an open mouth bag. The bags are interconnected in web form and the tube applicator is positioned intermediate the unwind stand for the web of bags and filling and sealing equipment, so that as the web of bags are unwound a flexible dispensing tube may be attached to a side wall of each of the bags before they are fed into the filling and sealing apparatus downstream of the tube applicator.

28 Claims, 17 Drawing Figures

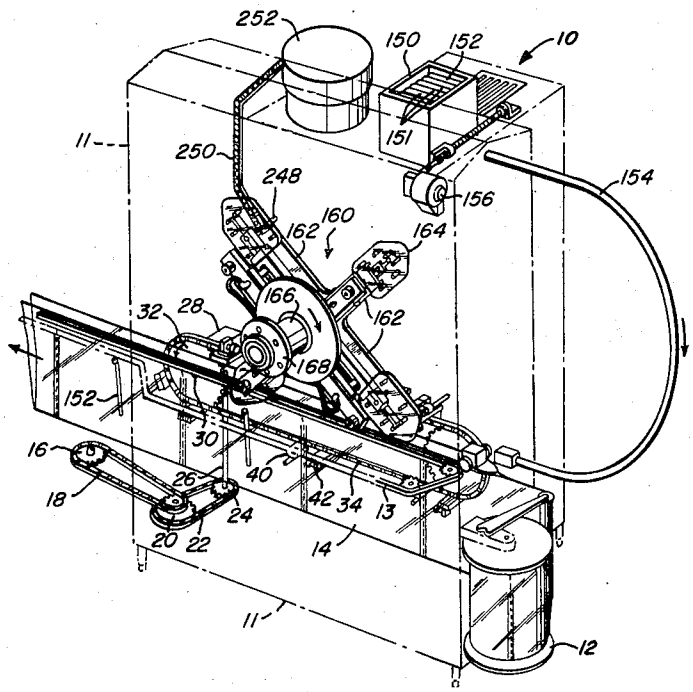

FIG-1

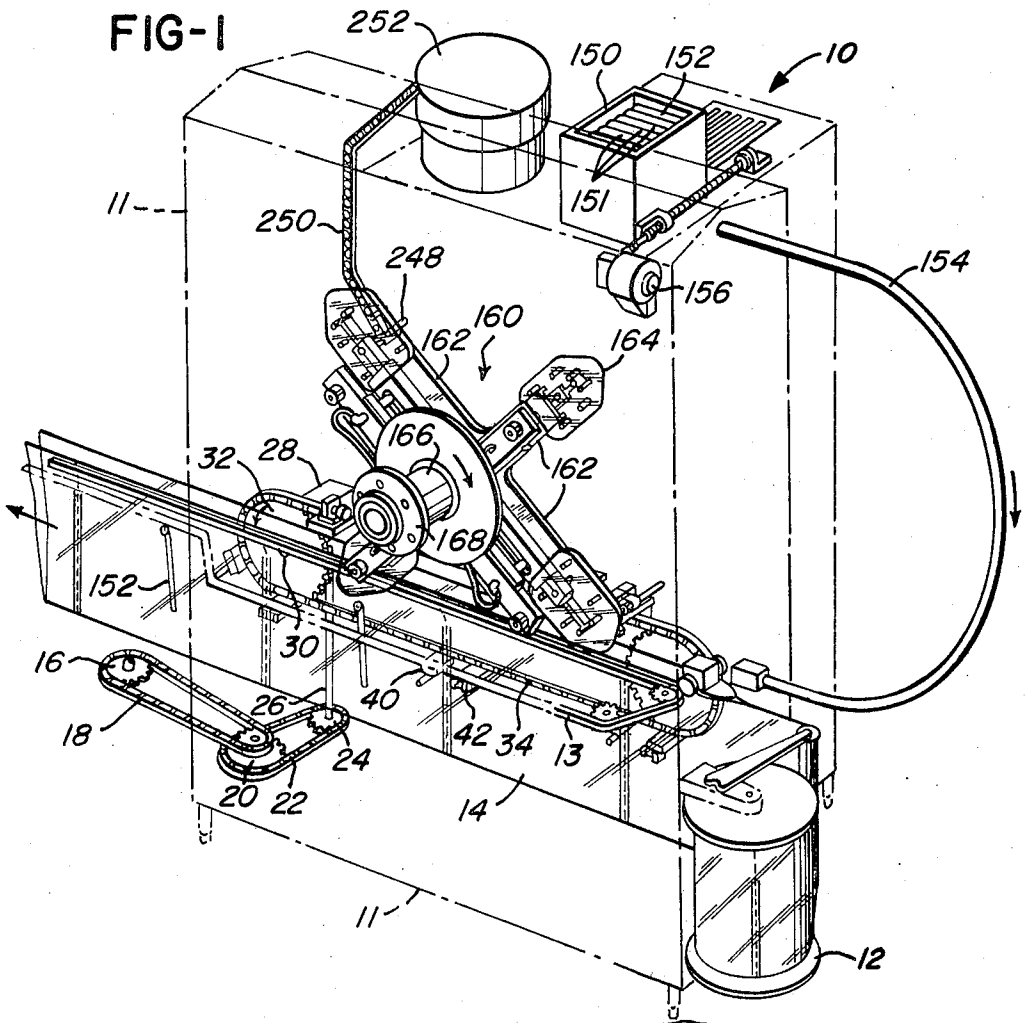
252
150
152
10
11
151
250
248
154
156
160
162
164
166
32
28
162
168
152
30
16
40
26
42
34
13
18
24
20
22
14
11
12

FIG-2

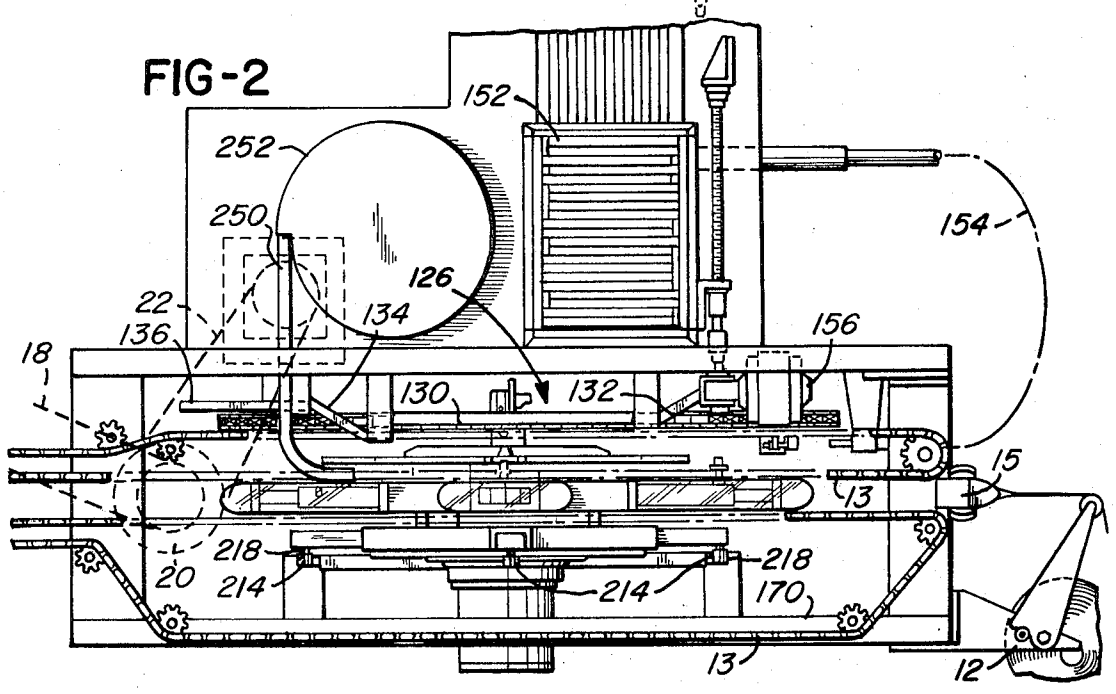
152
252
154
250
126
22
134
136
156
18
130
132
15
13
218
218
20
214
214
170
13
12

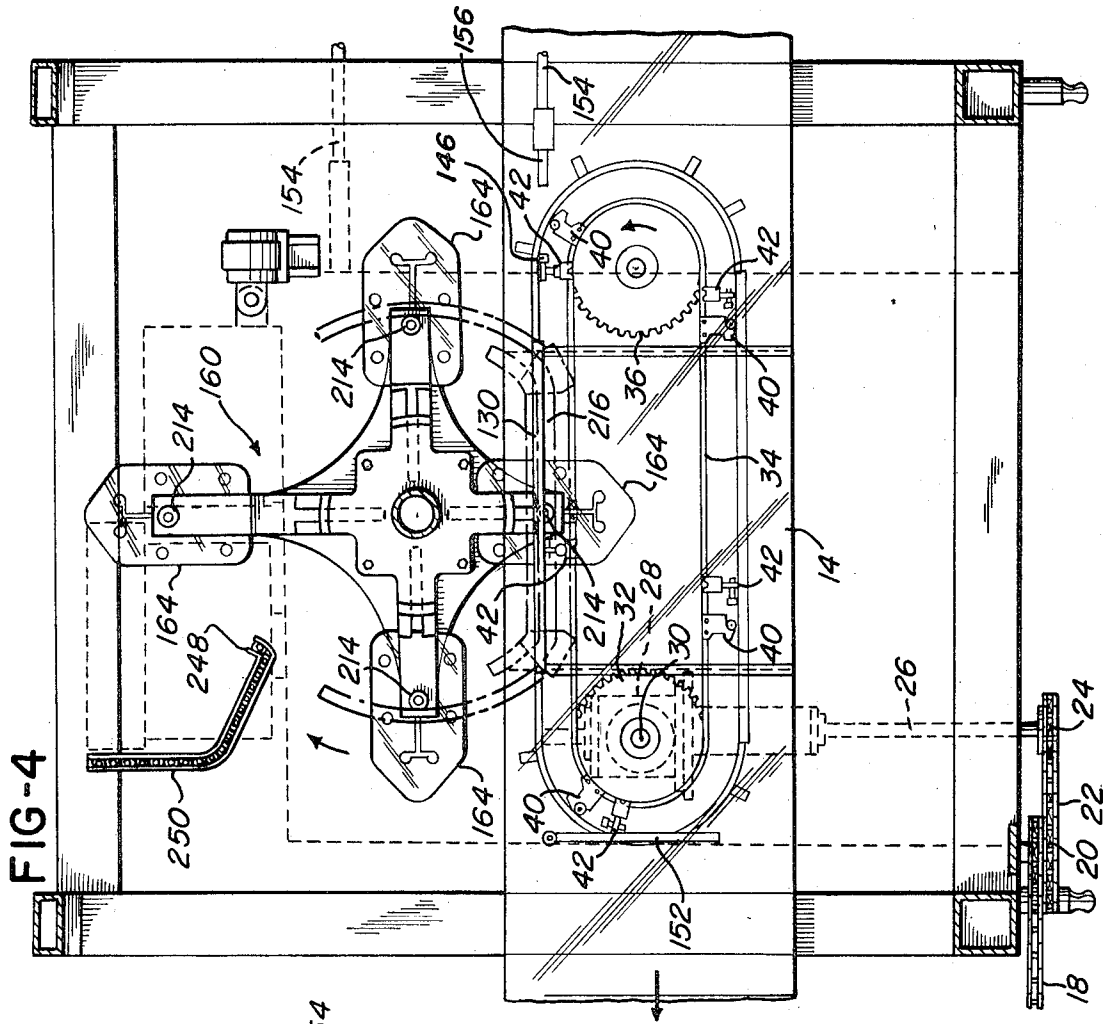
156
154
146
164
42
40
42
214
160
214
130
216
36
40
164
34
14
42
28
32
214
42
30
40
164
248
214
26
24
250
164
40
42
22
20
152
18

FIG-4

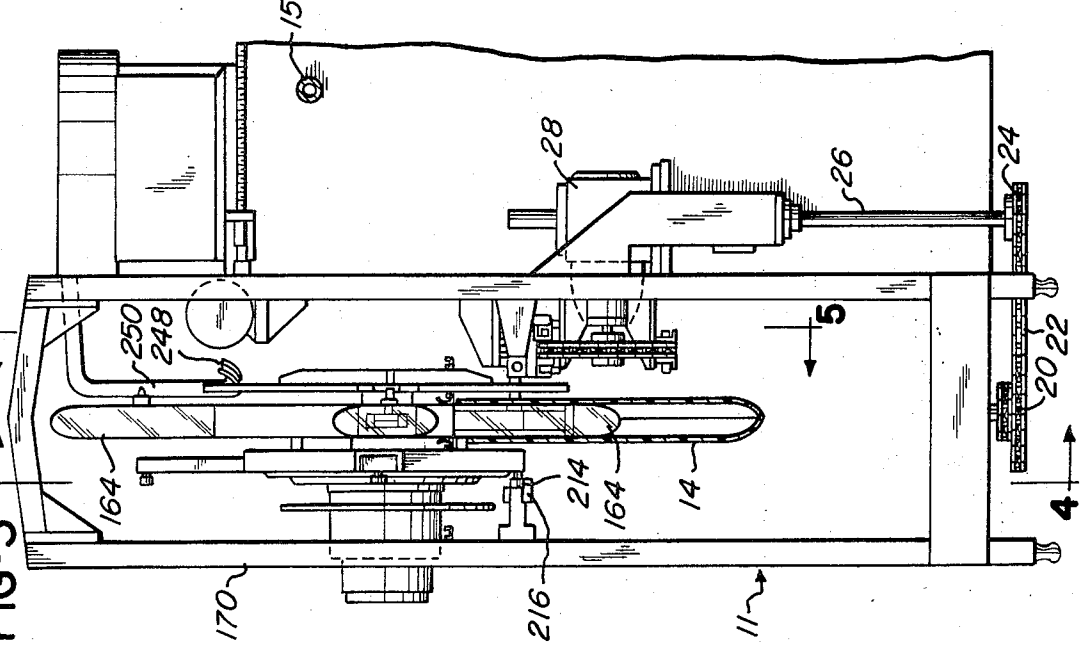
154
28
26
24
5
250
248
5
22
20
4
164
214
164
14
4
170
216
11

FIG-3

FIG-5

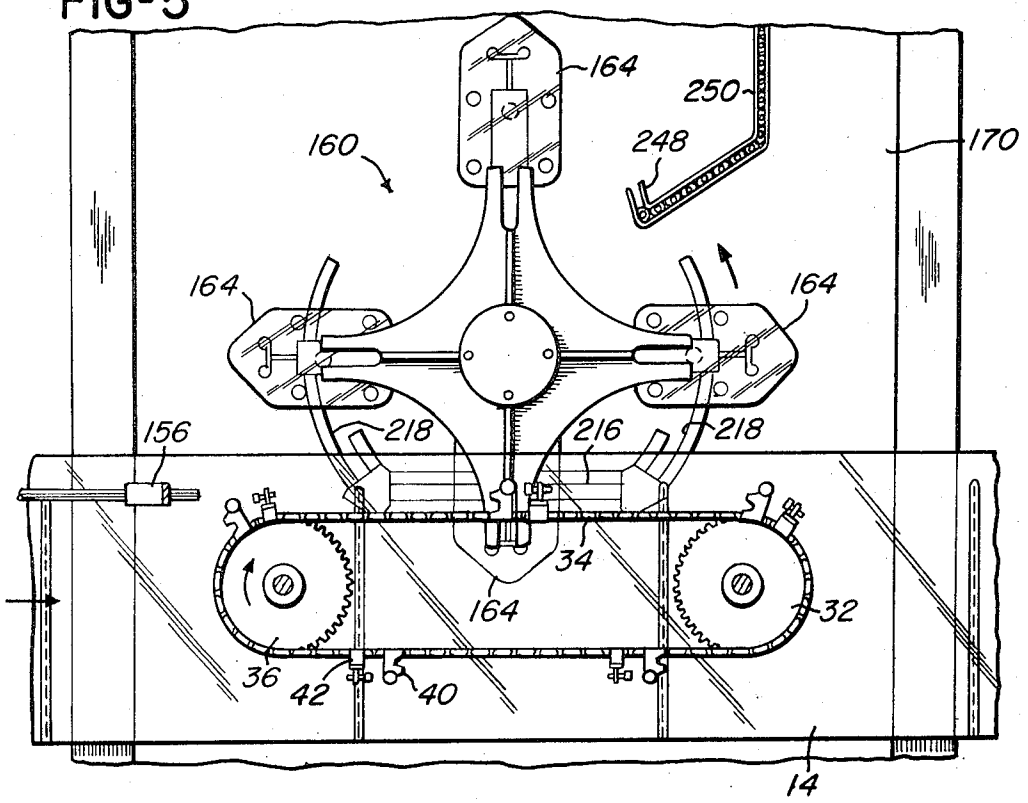

FIG-6

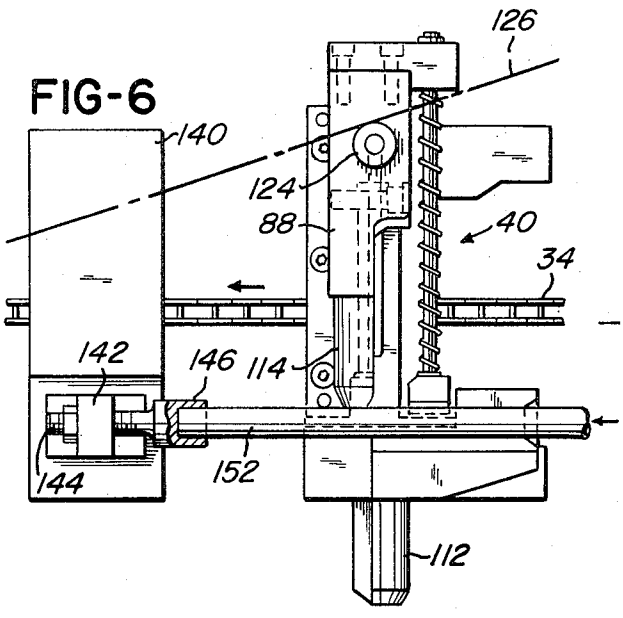

FIG-7

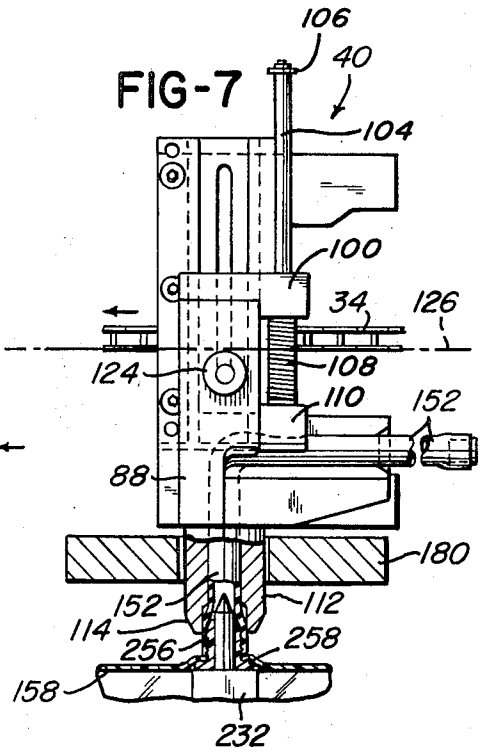

FIG-8

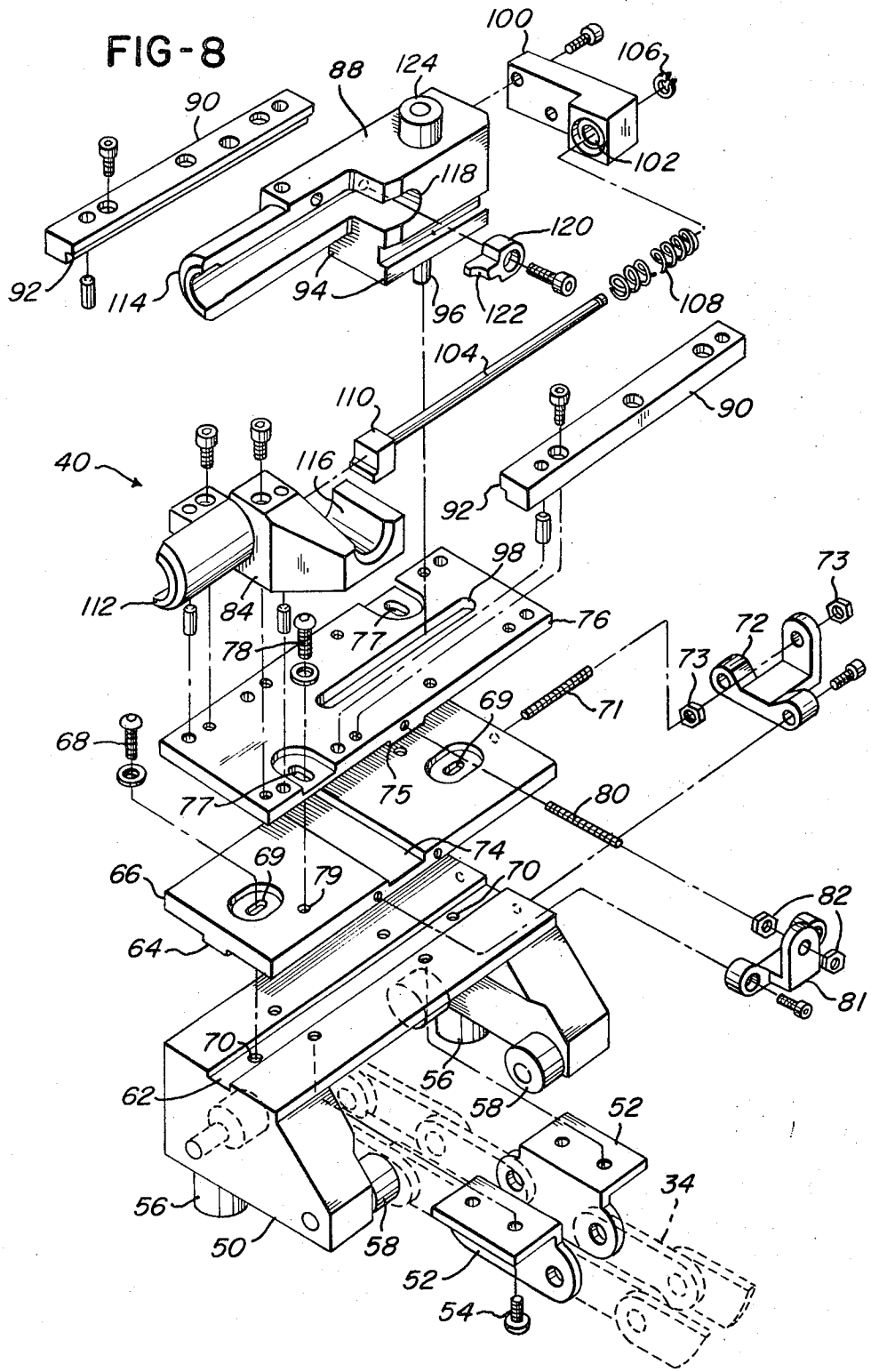
100
106
88
124
90
102
118
120
92
114
94
96
122
108
104
110
90
40
116
92
98
73
112
84
76
72
78
77
73
69
71
68
75
80
77
74
69
70
66
79
82
64
81
70
56
62
58
52
34
56
50
58
52
54

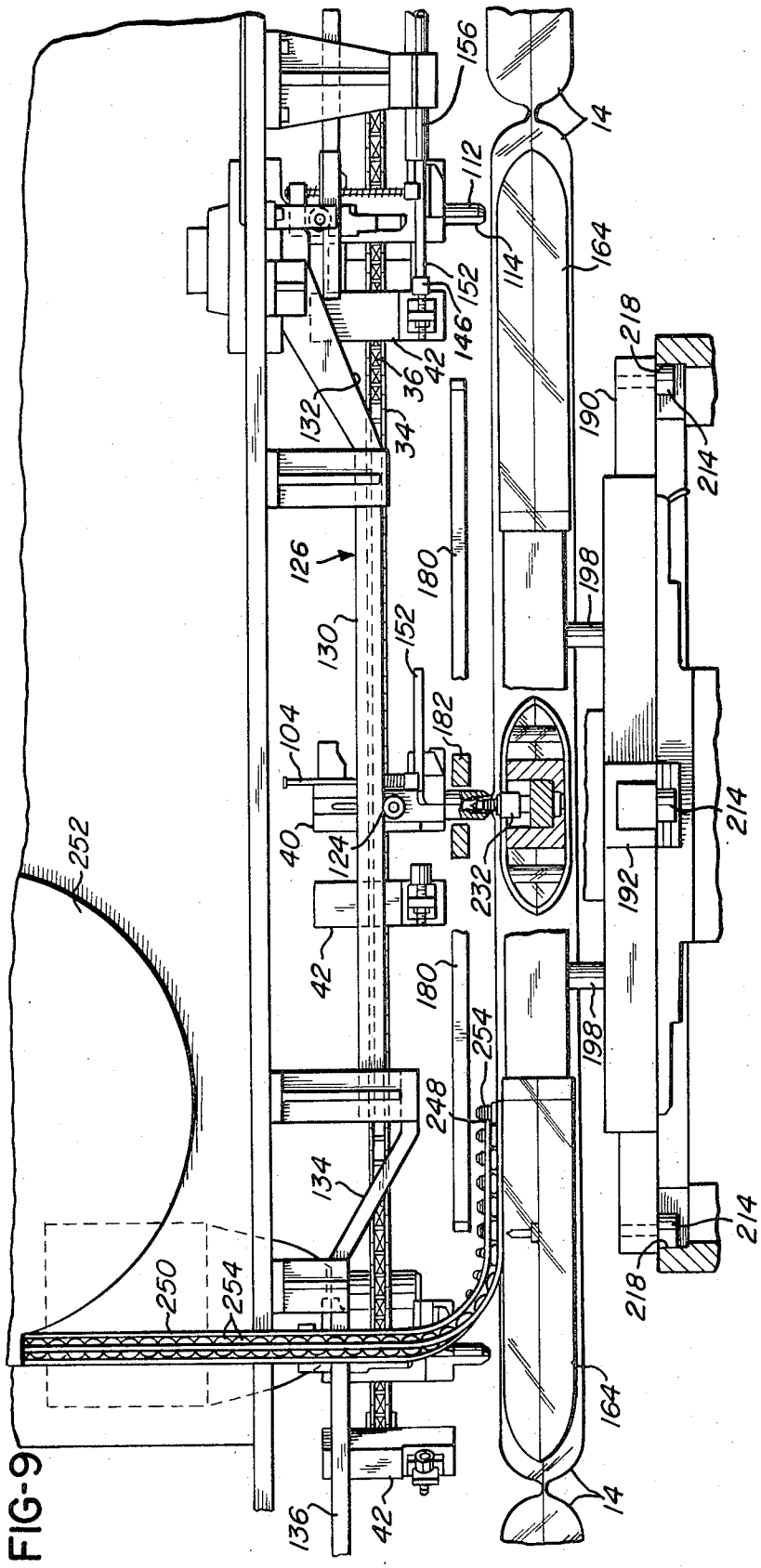
156
14
112
114
164
152
146
42
36
132
34
218
190
214
126
180
198
130
152
182
104
40
124
232
214
192
252
42
180
198
254
248
134
214
218
250
254
164
14
136
42

FIG-9

FIG-10

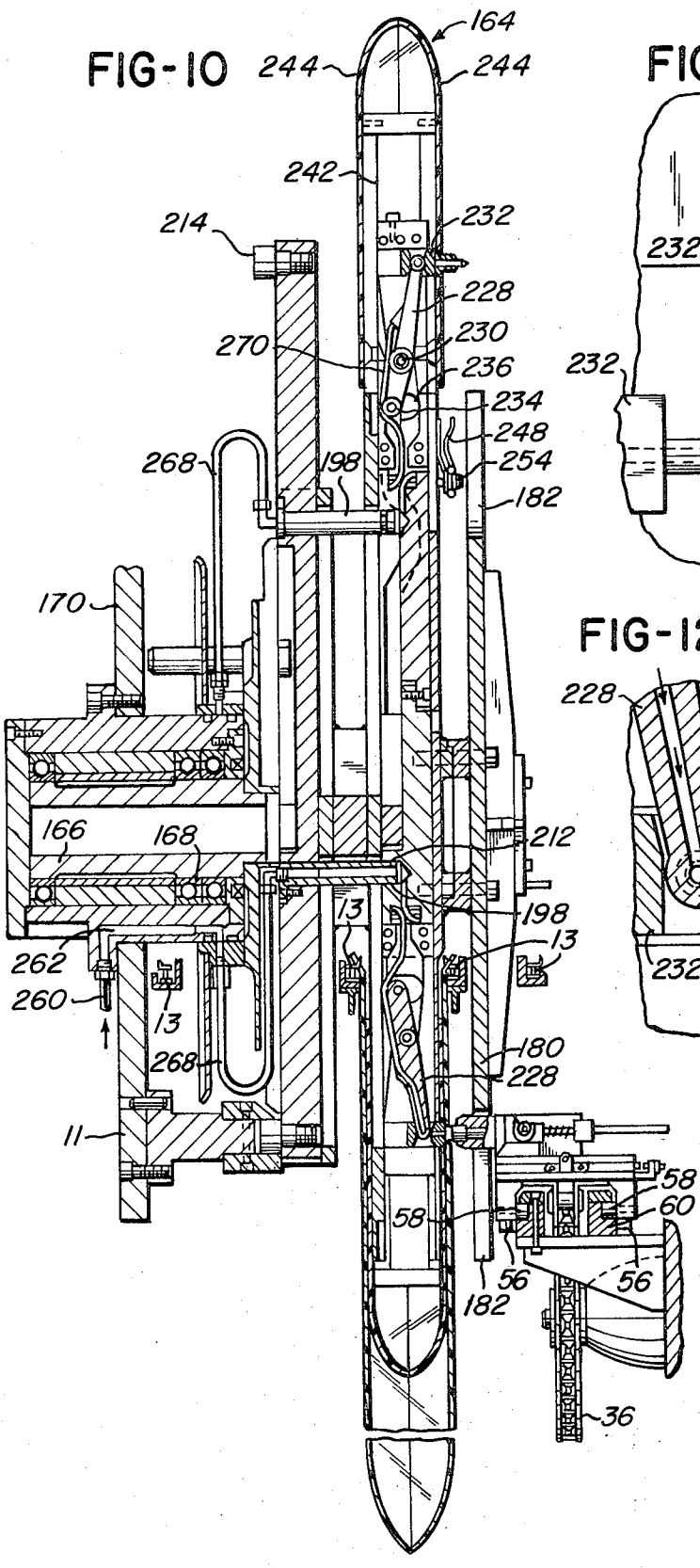

FIG-11

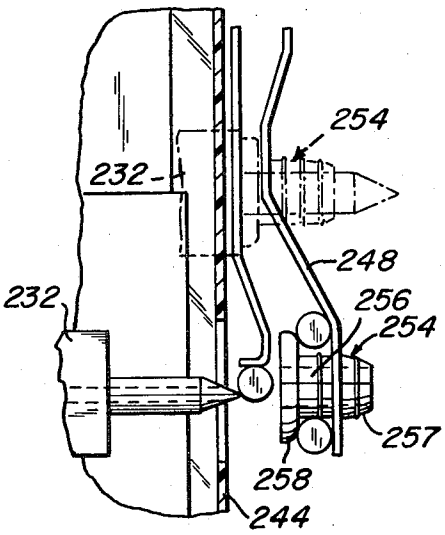

FIG-12

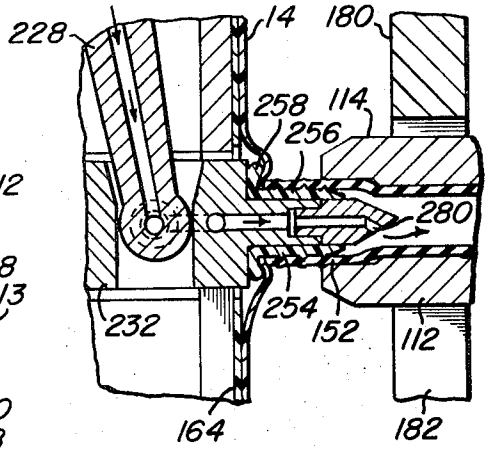

FIG-13

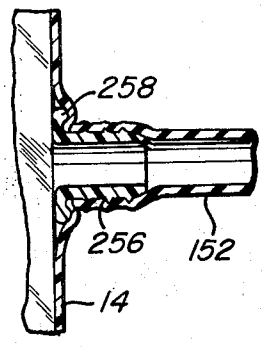

FIG-14

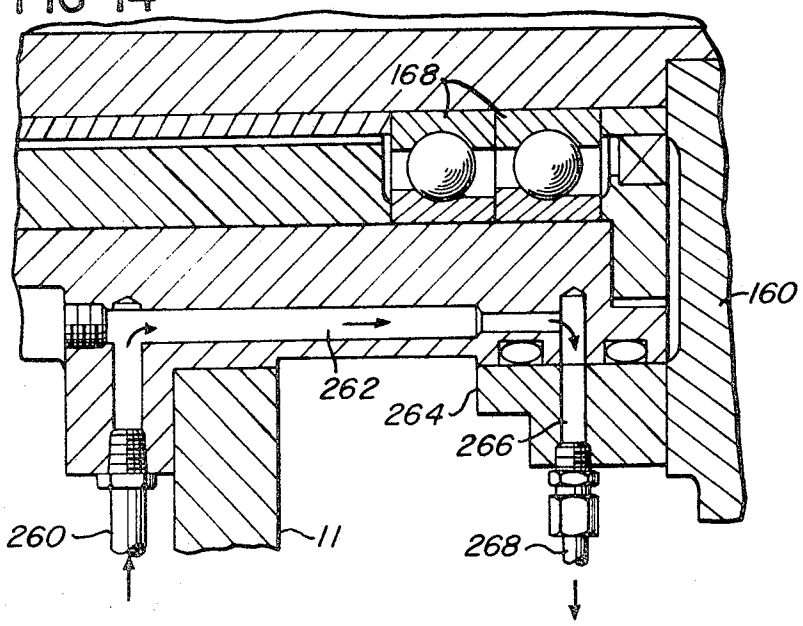

FIG-15

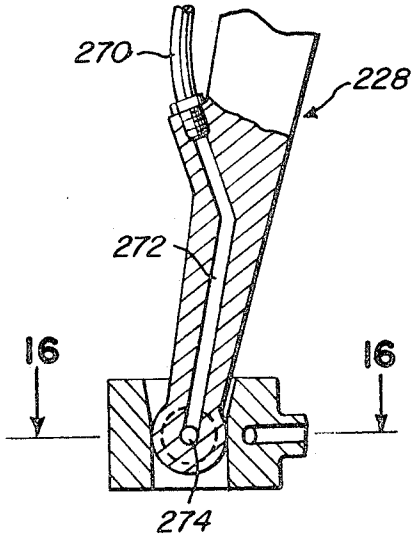

FIG-16

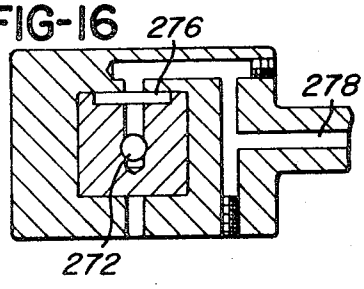

FIG-17

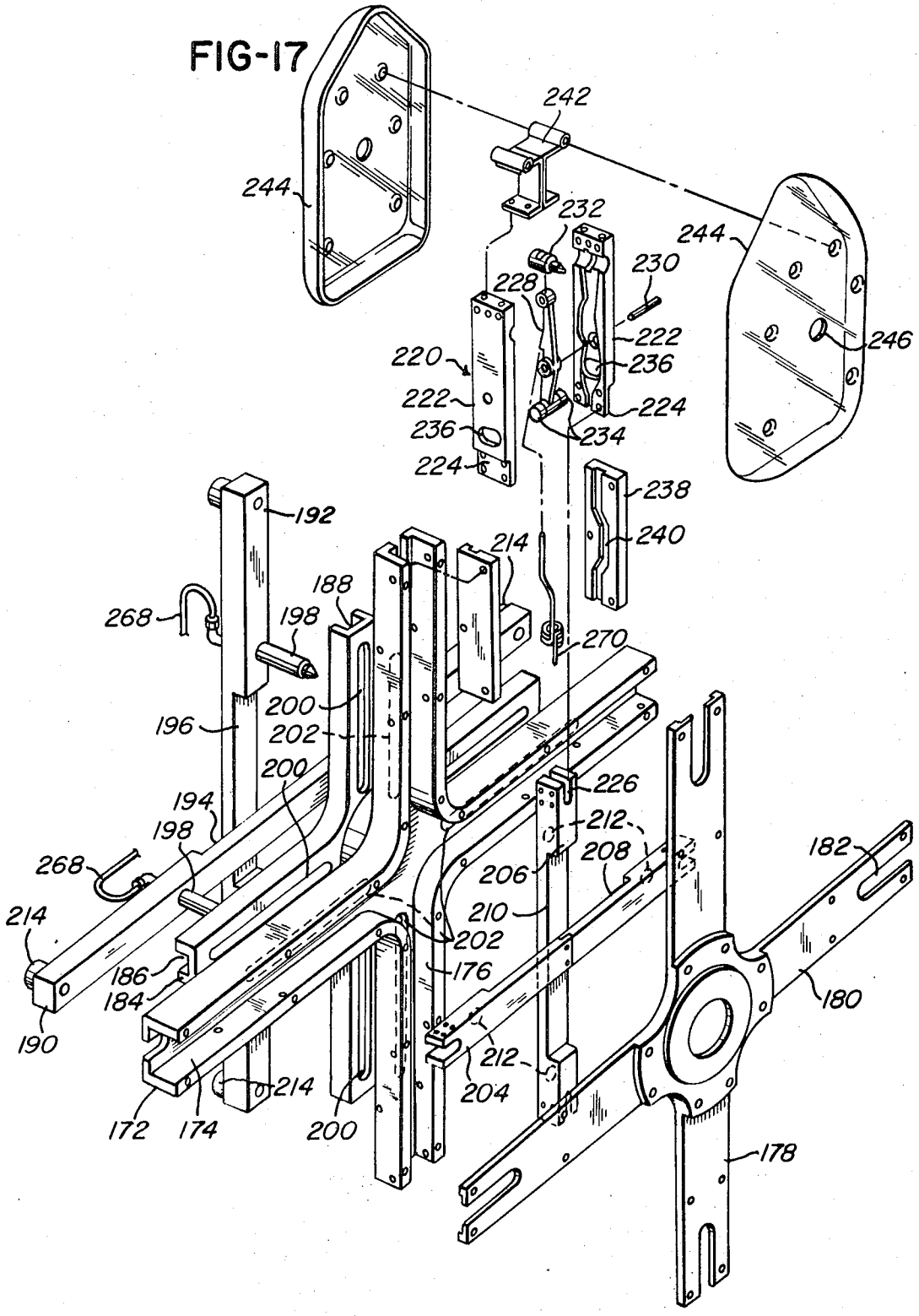
242
244
232
244
230
228
246
222
220
236
222
224
236
234
224
238
192
240
214
188
268
198
270
200
196
202
200
226
194
212
198
208
182
268
206
214
210
202
186
176
184
180
190
212
214
204
172
174
200
178

TUBE APPLICATOR

CROSS-REFERENCE TO RELATED APPLICATION

PACKAGING MACHINE, Ser. No. 133,308, filed Apr. 12, 1971.

BACKGROUND OF THE INVENTION

The above noted, related application discloses method and apparatus for filling and sealing bags in a web of such bags on a continuous basis. The apparatus may include an unwind stand holding a supply of such bags in rolled form and a conveying system for unrolling the web of bags and carrying it in a downstream direction in synchronization with a series of transfer cans which pick up a metered supply of the material being packaged and deposit it into the bags through the open mouths thereof.

In many instances it is desirable to have a dispensing tube attached to a side wall of each of the bags. For example, a common application is in the packaging and dispensing of milk, ice cream mixes, and other liquid, dairy products. One method of accomplishing this has been to attach such dispensing tubes to the film or other flexible material from which the bag is manufactured before the film is formed into a bag. This method offers the advantage that the tube attaching process can be carried out with a flat web of packaging material. It has the disadvantage, however, that the attached tube may interfere with the subsequent bag formation process and the tube itself may become detached from the bags during the manufacturing of the bags.

SUMMARY OF THE INVENTION

The present invention provides a method and apparatus for attaching a dispensing tube to side wall of each bag in a web of such bags on a continuous basis.

Although not limited to such use, the tube applicator of the present invention is particularly adapted for use with bag filling and sealing equipment and may be conveniently positioned immediately upstream of the filling and sealing apparatus.

Where the tube applicator of the present invention is utilized in conjunction with a filling and sealing machine, the drive for the tube applicator can conveniently be obtained from a power take off from the filling and sealing machine so that the tube applicator may operate in synchronization with the filling and sealing machine.

In accordance with the illustrated embodiment of the present invention, a drive sprocket is driven from the power take off of a filling and sealing machine and is wrapped by a drive chain which also wraps an idler sprocket positioned upstream of the drive sprocket.

The drive chain carrier a series of spaced, tube positioning devices which receive dispensing tubes from a magazine and bend one end of each of the tubes into proximity to a side wall of the bags in the web of bags while transporting the tube in synchronization with the web.

The tube applicator also includes a rotatable assembly having a series of outwardly projecting spokes. The rotatable assembly is driven by direct engagement with the tube positioning devices carried by the drive chain and as the assembly rotates, the spokes are received in the bags through the open mouths thereof.

Each of the spokes carries a pivoted lever which picks up a grommet from a supply of grommets and, after the spoke is positioned within a bag, forces the grommet through the side wall of the bag and into an open end of a dispensing tube which is positioned just opposite the grommet by the tube positioning devices carried by the chain.

The grommets each include a tubular shank portion having a tapered leading end for guiding it into engagement with the open end of the tube. The shank of each grommet also is provided with annular friction rings which improve the resistance to separation from the dispensing tubes.

The pivoted levers are slidably mounted in the spokes of the rotatable assembly and through the use of a camming mechanism the arcuate movement of the ends of the spokes is transformed into linear movement parallel to the drive chain while the spokes are received into the bags.

The grommet applying mechanisms are also connected to a source of pressurized air, so that as a grommet is pushed through the side wall of the bag in which it is received, a blast of pressurized air is discharged through the grommet. This has two effects.

First, the jet of air assists in puncturing or rupturing the bag material so that the shank of the grommet may pass through it while the flange of the grommet is retained within the bag, and secondly, the blast of air into the tube positioned just opposite the grommet expands the end of the tube to facilitate insertion of the shank of the grommet into the end of the tube.

In the assembly of the dispensing tube to the bag in combination with the grommet, the pivoted levers, which pick up and carry the grommets to assembly position, are tubular and pointed to first pierce the side wall of the bag and then convey a blast of air into the dispensing tube.

During this assembly, the film wall of the bag forms an elongated "skin" or thinned sheath of film, tightly engaging the outside circumference of the grommet shank and over which thinned sheath of film the dispensing tube comes to clamping rest, thus forming a liquid tight seal.

BRIEF DESCRIPTION OF THE DRAWINGS

FIG. **1** is a perspective view showing a tube applicator in accordance with the present invention;

FIG. **2** is a top plan view of the applicator;

FIG. **3** is an end view of the tube applicator;

FIG. **4** is view taken on line **4—4** of FIG. **3**;

FIG. **5** is a view taken on line **5—5** of FIG. **3**;

FIG. **6** is an enlarged view of a tube positioning device;

FIG. **7** is a view similar to FIG. **6** but showing the end of a tube bent over into proximity to the side wall of a bag;

FIG. **8** is an exploded perspective view of the tube positioning device;

FIG. **9** is a top view, with parts in section, of a portion of the tube applicator;

FIG. **10** is an end view, with parts in section, of a portion of the tube applicator;

FIG. **11** is a view of a grommet carrying head positioned to receive a grommet from a supply thereof;

FIG. **12** is a cross-sectional view showing a grommet being inserted into the expanded end of a dispensing

tube with a portion of a side wall of a bag clamped therebetween;

FIG. 13 is a cross-sectional view showing a dispensing tube attached to the side wall of a bag;

FIG. 14 is a cross-sectional view showing a portion of the path of the pressurized air fed through the grommet attaching heads;

FIG. 15 is a cross-sectional view of a portion of a grommet carrying head and the associated pivot lever;

FIG. 16 is a view taken on line 16—16 of FIG. 15; and

FIG. 17 is an exploded perspective view of the rotatable grommet carrying assembly.

DESCRIPTION OF THE PREFERRED EMBODIMENTS

Referring initially to FIG. 1 of the drawings, it will be seen that a tube applicator **10** in accordance with the present invention may include a housing and supporting structure, portions of which are shown in phantom lines at **11** in FIG. 1 and solid lines in FIG. 2. The tube applicator, in the illustrated embodiment of the invention, is positioned intermediate an unwind stand **12** and a filling and sealing machine positioned downstream of the tube applicator in the direction indicated by the arrow.

The filling and sealing machine per se does not form part of the present invention and may be of the type illustrated in the above noted related application, including toothed feed chains **13** which grip the upper edges of the bags **14** as they are spread apart by a plow-like device **15.** In accommodating the tube applicator it is merely necessary to lengthen chains **13** to permit the tube applicator to be positioned between the unwind stand and the filling and sealing machine.

A power take off from a filling and sealing machine, indicated by the drive shaft and sprocket **16,** may be utilized to power the tube applicator through a chain **18,** double sprockets **20,** a second chain **22,** a sprocket **24** and a shaft **26** leading to a right angle gear box **28** (see also FIGS. 3 and 4 of the drawings).

A drive shaft **30** extending from the gear box **28** at right angles to the input shaft **26** has mounted thereon a drive sprocket **32.** Drive sprocket **32** is wrapped by a chain **34** which also wraps an idler sprocket **36** suitably journalled on its axle at a point adjacent the unwind stand **12.** The drive chain **34** carries a series of uniformly spaced tube positioning devices **40,** five of which are shown for purposes of illustration, and stop members **42,** one of which is associated with each tube positioning device **40.**

The tube positioning devices as best seen in FIGS. **5** through **8** of the drawings, each include a base member **50** which is attached to the drive chain by a pair of clamping members **52** which engage the drive chain on opposite sides thereof and are bolted by means of bolts **54** to the base member **50.** Base member **50** also includes guide rollers **56** and **58** mounted on axes extending at right angles to each other and engageable with a stabilizing track shown in FIG. **10** of the drawings at **60.** The base member **50** has a slot **62** formed in its upper surface and receives a complementarily shaped bottom portion **64** on the lower surface of intermediate plate member **66.**

Plate member **66** is bolted to the base member **50** by means of bolts **68** which pass through slotted openings **69** in the plate member **66** and are threaded into openings **70** in the base member **50.** With this construction it will be seen that the intermediate plate member **66** is capable of limited adjustment with respect to the base member **50** in a direction along the slot **62** by means of the threaded shaft **71** carried by bracket **72** and engaged by double nuts **73.**

The upper surface of the plate member **66** is slotted at **74** and receives the downwardly projecting portion **75** of the top plate member **76.** The top plate member **76** is provided with slotted openings **77** which receive bolts or the like **78** which are also threaded into the openings **79** in the plate **66.** With this construction it will be seen that the top plate member **76** may be adjusted transversely of the intermediate plate member **66** along the slot **74** by means of the threaded shaft **80** carried by bracket **81** and engaged by double nuts **82.**

A fixed tube positioning member **84** is bolted to the top plate member **76** and a movable tube positioning member **88** is slidably mounted on the top plate member **76** by means of track members **90** which are bolted to the plate **76** and having overhanging ledges **92** slidably receiving the outwardly projecting ledges **94** on the member **88.** Member **88** also includes a downwardly projecting stud **96** slidably received in the elongated slot **98** formed in the plate member **76.**

An L-shaped block **100** is bolted to one end of the movable tube positioning member **88** and has an opening **102** formed therethrough to receive a rod **104.** Rod **104** is retained in the block **100** by means of a resilient split-ring **106** and has a spring **108** encircling it and bearing against a tube closure member **110** mounted on one end of the rod **104.**

As seen in FIGS. **6** through **8** of the drawings the fixed and movable tube positioning members **84** and **88** are provided with semi-circular barrel portions **112** and **114** projecting at right angles to the drive chain **34.** Member **84** is also provided with a semi-circular tube engaging portion **116** extending at right angles to the barrel **112** while member **88** is provided with a semi-circular portion **118** extending at right angles to its barrel **114.**

Additionally, an insert **120** is received within the member **88** having a curved portion **122** to provide a smoothly curved surface extending from the semi-circular section **118** to the interior of the barrel **114.** On its upper surface the movable tube positioning member **88** is provided with a roller **124** which rides along the cam track **126** indicated in phantom lines in FIGS. **6** and **7.**

Cam track **126,** as seen in FIGS. **2** and **9** of the drawings, includes an active run **130** extending parallel to the drive chain **34,** an upstream branch **132** which extends at an angle to the drive chain, a downstream branch **134** which also extends at an angle to the drive chain and has one end spaced from the run **130,** and a return run **136** which also extends parallel to the drive chain **34** and the run **130.**

As noted above, each of the tube positioning devices **40** has associated therewith a stop member **42.** Each of the stop members **42** includes a base member **140** (FIG. **6**), which is bolted to the drive chain **34** in advance of the tube positioning members **40** and has an upstanding threaded block **142** fixed thereon and receiving the threaded shaft **144** of the tube engaging socket **146.**

A tube magazine **150** is mounted on top of the housing **11**, as seen in FIG. **1** of the drawings, and contains a plurality of tubes **152** which are fed from the magazine one at a time into the conduit **154**. The magazine **150** may be powered by a stepping motor **156** to position sequentially one vertical column **151** of tubes **152** over a feed slot aligned with a conduit **154** and each tube is fed into the conduit **154** by means of a pneumatic piston and cylinder or the like or any suitable feed mechanism. As will be apparent to those skilled in the art, the operation of the feeding mechanism for the tubes may be keyed to the movement of the bags **14** into the tube applicator by means of a photoelectric cell or the like.

Regardless of the specific manner in which the tubes **152** are pushed through the conduit **154**, they are ejected from the end **156** of the conduit as seen in FIGS. **4** and **9** of the drawings and the leading edge of each tube **152** is received in the socket **146** of the stop member **42** while the midpoint of the tube is engaged by the semi-circular portion **116** of the member **84**.

As the members **40** and **42**, with a tube engaged thereby, move downstream along the upper reach of the drive chain **34** the cam roller **124** on the movable tube positioning member **88** engages sections **132** of the cam track. This causes the movable member **88** to slide along the top plate member from the position shown in FIG. **6** of the drawings to that shown in FIG. **7**.

As the member **88** slides along the top plate member **76** its barrel **114** engages the forward end of a dispensing tube **152** and bends it at right angles to the trailing end of the tube and into engagement, or at least close proximity, to a wall **158** of a bag **14**. At the same time, the block **100** in FIG. **7** compresses the spring **108** encircling the shaft **104** to bring member **110** against the tube to close the tube for a purpose to be presently described.

The movable member **88** will remain in the position shown in FIG. **7** with respect to the remainder of tube positioning device **40** for as long as the cam **124** engages run **130** of the cam track. During this time a tube fastener will be installed through the wall **158** of the bag and into engagement with the end of the tube positioned adjacent the bag wall in the manner explained below.

When the cam roller **124** passes the end of the section **130** of the cam track it engages the branch **134** of the cam track, which causes the member **88** to retract to its original position. It will then remain retracted as the tube positioning device moves with the drive chain back towards the upstream end of the tube applicator with the cam rollers engaging the return run **136** of the cam track.

As noted above, while the tube positioning devices **40** are moving in synchronization with the bags **14** with a tube end positioned adjacent or touching a wall **158** of each bag, tube fastener, such as a grommet, is conveyed from a supply of such grommets and inserted into the end of the tube through the wall of the bag.

The mechanism for accomplishing this consists of a rotatable assembly **160** (see FIGS. **1, 4, 5** and **17** of the drawings). The rotatable assembly **160** includes four outwardly projecting spokes **162**, each of which terminates in a paddle like structure **164**. The assembly **160** is mounted on a shaft **166** journalled in a bearing **168**, as best seen in FIG. **10** of the drawings, with the bearing **168** in turn mounted on an upright member **170** of supporting structure **11**.

The rotatable assembly **160** includes a base structure **172** which, as best seen in FIG. **17** of the drawings, includes intersecting channel portions **174** and **176** extending at right angles to each other. Bolted to one face of the base member **172** is a drive structure **178** which includes a plurality of outwardly projecting arms **180** each of which is slotted at its outer end as at **182**.

The slots **182** engage the barrels **112** and **114** of the tube positioning devices **40** as best seen in FIGS. **7, 9** and **10** of the drawings. Thus, the movement of the drive chain **34** is directly transmitted to the assembly **160**, insuring positive synchronization of the movement of these drive chain and assembly **160**.

Bolted to the opposite face of the base member **172** is a cross-shaped member **184** having intersecting channels **186** and **188** formed therein and opening oppositely to the channels **174** and **176**. A first master slide arm **190** is slidably received in the channel **186** while a second master slide arm **192** is slidably received in the channel **188**.

The slide arms **190** and **192** are cut away at their mid sections, as indicated at **194** and **196**, respectively. Each of the master slide arms also carries an interconnecting pin **198** which extends through slots **200** formed in cross member **184** and aligned slots **202** in member **172**.

Received within the channels **174** and **176** of the base member **172** are slave slide arms **204** and **206**, respectively, which have cut away portions, as at **208** and **210**, to permit them to slide across each other within their respective channels. The ends of the pins **198** are received in openings **212** formed in the slave slide arms **204** and **206**, as seen in FIG. **10** of the drawings.

Each of the master slide arms **190** and **192** carries a cam roller **214** at each end thereof. The cam rollers **214** engage a cam track, which includes a straight portion **216** extending parallel to the upper reach of the drive chain **34**, as best seen in FIGS. **4** and **5** of the drawings, and curved branches **218** at each end of the straight portion **216**.

Thus, as the rotatable assembly is driven by engagement of the slots **182** with the barrels **112** and **114**, the cam rollers **214** engage the cam tracks **216** and **218** to cause the master slide arms **190** and **192** to slide within their respective channels **186** and **188**. This sliding motion is transmitted by the pins **198** to the slave slide arms **204** and **206**, causing them to slide within their respective channels **174** and **176**.

The configuration of the cam track **216-218** is such that as a cam roller **214** rolls along the cam track **216** it will cause the arm on which it is mounted to slowly move upwardly until it reaches a vertical position and then downwardly, so that the otherwise arcuate motion of the end of the arm that would result from a strictly rotational movement of the arm is translated to a straight line movement parallel to the upper reach of the drive chain **34**.

At each of its ends each of the slave slide arms **204** and **206** has mounted thereon a grommet carrying subassembly **220** as best seen in FIG. **17** of the drawings. Each grommet carrying subassembly includes a pair of side plates **222** having reduced ends **224** received in slots **226** in the ends of the arms **204** and **206** and bolted or riveted in place.

Enclosed between each pair of side plates **222** is a lever arm **228,** pivotally mounted therein by means of a pin **230.** At its outer end each lever arm **228** mounts a grommet carrying head **232** while at its opposite end the lever carries cam followers **234** which project outwardly through the side plates **222** through elongated somewhat arcuate openings **236.**

Mounted within each end of each of the channels **174** and **176** are side cam plate **238** having cam tracks **240** formed on the inner surfaces thereof and engageable by the cam followers **234.** At their outer ends the side plate **220** having a mounting bracket **242** bolted thereto. The mounting brackets carry the opposite halves **244** of the paddle like structures **164,** which have openings **246** formed therethrough in alignment with the grommet carrying heads **232.**

With the above structure it will be apparent that as the assembly **160** rotates, causing the arms **204** and **206** to slide within their respective channels, the cam members **234** will ride in the cam slots **240,** which are fixed with respect to the channels **174** and **176,** causing the lever **228** to pivot about the pin **230.**

Thus, as each spoke **162** rotates toward its uppermost position its grommet carrying head **232** will be projected through the opening **246** in its paddle **164.** At this position, as best seen in FIGS. **1** through **4** and **9** through **11** of the drawings, is the feed end of the grommet supply rack **250** leading from the grommet magazine **252** which may be of the conventional, vibrating bowl type.

Therefore, as each spoke **162** moves toward uppermost position and its grommet carrying head **232** projects outwardly through the opening **246,** it will engage a grommet **254,** as best seen in FIG. **11** of the drawings. As the spoke continues to move it lifts the grommet **254** from the end **248** of the grommet supply rack and the head **232** then retracts back within the paddle assembly **164** with the grommet **254** carried thereby.

Continued rotation of the assembly **160** will cause the paddle **164,** as it moves from its uppermost position to its lowermost position, to be inserted through the open mouth of a bag **14** as seen in FIGS. **1, 3, 4, 5** and **10** of the drawings. Because the assembly **160** is driven directly by the drive chain **34** which is also carrying the tube positioning members **40,** the relative positions of the bent over ends of the tubes **152** and the grommets **154** can be precisely controlled so that the end of each tube **152** is positioned on the outside of each bag exactly opposite the grommet **254** carried by the head **232.**

As each spoke **162** continues to rotate from an approximately horizontal position toward a vertical position, its associated end of a slave slide arm **204** and **206** is sliding upwardly within its channel **174** and **176** so that the grommet carried by that particular spoke is moving parallel to the upper reach of the drive chain **34** to maintain the correct positioning between the end of the tube **152** carried by tube positioner **40** and a grommet **254** carried by a grommet carrying head **232.**

Additionally, since the end of the respective slave slide arm is now sliding upwardly within its respective channel, the cam follower **234** carried by the lever arm **228** mounted on the end of that slide arm is moving upwardly along the cam slots **240,** causing the grommet carrying head to again project outwardly through the opening **246.**

Since the spoke is positioned within a bag **14** this causes the grommet carrying head to pierce the side wall of the bag. The shank **256** of the grommet tapered, as at **257,** to facilitate entry into an end of a tube **152,** is guided into a bent over end of a tube **152,** as best seen in FIG. **12** of the drawings, clamping an elongated, skin tight portion of the side wall of the bag **14** that has been stretched over the shank of the grommet between the inside diameter of the tube and the shank of the grommet and also between the end of the tube and a flange **258** of the grommet.

To assist in the puncturing of the side wall of the bag by the grommet carrying head and to expand the end of the tube **152** receiving the grommet to facilitate the insertion of the grommet therein, means is provided in accordance with the present invention for delivering an air blast through the grommet carrying piercing head as it moves through the wall of a bag.

Thus, as seen in FIGS. **10** through **16** of the drawings, pressurized air is fed into the apparatus from a suitable source through a hose connection or the like **260.** From the hose connection **260** the pressurized gas travels through the passageway **262** in a portion of the housing **11.** An outwardly projecting hub **264** on the assembly **160** is provided with four passages **266** (only one of which is shown), corresponding to each of the spokes **162** and connected thereto by means of a conduit **268.**

Each conduit **268** feeds through the hollow pin **198** to one end of a small diameter tube **270.** Tube **270** extends through the lever arm **228** and terminates, as shown in FIG. **15,** at a drilled passage **272** formed through one end of the arm **228.** Passage **272** connects with a cross passage **274** which includes, as seen in FIG. **16,** an enlarged circular portion **276.** Through the enlarged circular portion **276** cross passage **274** is interconnected to a passage **278** extending through the grommet carrying head **232** and having an outlet at **280,** as seen in FIG. **12** of the drawings.

From the above, it will be apparent that, as each spoke **162** rotates to its lowermost position and its grommet carrying head moves outwardly to engage the wall of a bag **14,** a passage **266** associated with that particular spoke **162** will be aligned with the terminal end of the stationary passage **262,** allowing pressurized air to pass through passage **266,** conduit **268,** pin **198,** tube **270,** passageways **272, 274,** enlargement **276** and passageway **278** and into the grommet carrying head **232.**

This will expand the end of a tube positioned opposite the grommet carrying head **232** since the tube is closed by a closure member **110,** thereby facilitating insertion of the grommet into the end of the tube.

Thereafter, the spoke **162** rotates back towards a horizontal position, causing the grommet carrying head **232** to retract back within its associated paddle structure **164,** allowing the paddle to be withdrawn from the bag to return towards its uppermost position to enage another grommet.

Thus, it will be seen that as the web of bags moves from the unwind stand **14** downstream to the filling and sealing equipment, or the like, a dispensing tube **152** is attached to a side wall of each bag in a continuous operation with all components synchronized as with respect to each other and, if desired, with respect to the

filling and sealing equipment positioned downstream therefrom.

While the method and form of apparatus herein described constitutes a preferred embodiment of the invention, it is to be understood that the invention is not limited to this precise method and form of apparatus, and that changes may be made therein without departing from the scope of the invention.

What is claimed is:

1. Apparatus for attaching a tube to a moving wall of packaging material comprising:

a. means for positioning one end of a tube adjacent one side of a wall of packaging material,

b. means for moving said positioning means in synchronism with movement of said wall of packaging material,

c. means for positioning a tube fastener adjacent an opposite side of said wall of packaging material in opposition to said end of said tube,

d. means for moving said tube fastener positioning means in synchronism with said tube end and said wall of packaging material while said tube fastener is opposite said end of said tube, and

e. means for bringing said tube end and tube fastener into engagement with each other with a portion of said packaging material gripped thereby to attach said tube to said wall of packaging material.

2. The apparatus of claim **1** wherein:

a. said tube fastener positioning means includes means for injecting pressurized fluid through said tube fastener into said tube as said tube fastener is brought into engagement with said tube end.

3. The apparatus of claim **2** wherein said tube positioning means includes:

a. means for closing said tube at a position spaced from the end thereof whereby said pressurized fluid injected through said tube fastener into said end of said tube expands said tube and facilitates entry of said fastener thereinto.

4. The apparatus of claim **1** wherein said tube positioning means includes:

a. means for receiving and gripping a tube from a supply thereof with said tube extending approximately parallel to said wall of packaging material, and

b. means for bending said one end of said tube through approximately 90° into position adjacent said wall of packaging material.

5. The apparatus of claim **4** wherein said tube positioning means further comprises:

a. means for closing said tube at a point spaced from said end thereof to permit expansion of said end by the injection by pressurized fluid thereinto.

6. The apparatus of claim **1** wherein said means for moving said tube positioning means comprises:

a. a pair of spaced apart sprockets,

b. means for driving at least one of said sprockets in synchronization with the movement of said wall of packaging material,

c. an endless chain wrapping said sprockets and having a reach moving in spaced parallel relationship with said wall of packaging material, and

d. means mounting said tube positioning means on said chain.

7. The apparatus of claim **1** wherein said tube positioning means comprises:

a. a base member,

b. means on said base member for receiving said tube with said tube extending approximately parallel to said wall of packaging material,

c. stop means positioned downstream of said base member for engaging said end of a tube and locating said tube on said base member receiving means,

d. means on said base member for gripping and closing said tube, and

e. means mounted on said base member for bending said end of said tube through approximately 90° to position said end of the tube adjacent said wall of packaging material.

8. The apparatus of claim **1** wherein said tube fastener positioning means comprises:

a. a tube fastener carrying head, and

b. means for moving said tube fastener carrying head between;

i. a first position wherein said carrying head picks up a tube fastener, and

ii. a second position adjacent an opposite side of said wall of packaging material opposite said tube end.

9. The apparatus of claim **8** wherein said tube fastener positioning means further comprises:

a. means for moving said tube fastener carrying head into said tube end when said tube end is positioned opposite thereto.

10. The apparatus of claim **1** wherein said means for positioning said tube fastener comprises:

a. a plurality of spokes projecting outwardly from a common axis,

b. means for rotating said spokes about said axis,

c. a tube fastener carrying head mounted on each of said spokes,

d. means for directing said tube fastener carrying head along a substantially linear path in opposition to said tube end as the spoke on which it is mounted moves in an arcuate path about said axis, and

e. means for moving said tube fastener carrying head into engagement with said tube end positioned opposite thereto during said movement along said linear path.

11. The apparatus of claim **10** wherein said means for moving said carrying head along a linear path comprises:

a. slave slide arms slidably mounted in said spokes,

b. means mounting said tube fastener carrying heads on said slave slide arms, and

c. means for sliding said slave slide arms within said spokes as said spokes rotate about said axis.

12. The apparatus of claim **11** wherein said means for sliding said slave slide arms comprises:

a. master slide arms slidably received in said spokes and corresponding in number and position to said slave slide arms,

b. means for interconnecting said master and slave slide arms to transmit sliding motion of said master slide arms to said slave slide arms,

c. cam followers carried by said master slide arms, and

d. a cam track engaged by said master slide arms cam followers having a linear branch extending in spaced parallel relationship to the direction of travel of a wall of packaging material.

13. The apparatus of claim 12 wherein said means mounting said tube fastener carrying heads on said slave slide arms comprises:

a. a lever pivotally mounted on each of said slave slide arms,

b. means mounting one of said tube fastener carrying heads on each of said levers,

c. means mounting cam followers on said levers in spaced relationship to said tube carrying heads, and

d. a cam track carried by each of said spokes and engaged by said lever cam followers whereby slidable movement of said slave slide arms in their respective spokes will cause lever cam followers to move along their cam tracks, pivoting said levers and causing said tube carrying heads to move outwardly and bring a tube fastener into engagement with a tube end positioned in opposition thereto.

14. The apparatus of claim 13 further comprising:

a. means for ejecting a pressurized fluid through said tube fastener carrying head as a tube fastener carried thereby moves into engagement with said tube end.

15. The apparatus of claim 14 further comprising:

a. means for attaching said tube fasteners to said tube carrying heads at a point diametrically opposite the point where said tube fasteners will engage a tube end.

16. The apparatus of claim 15 wherein said tube end positioning means comprises:

a. a base member,

b. a stop member positioned downstream of said base member,

c. means for gripping and closing off a tube located on said base member by said stop member, and

d. means for bending an end of a tube located on said base member to a position adjacent a wall of packaging material.

17. The apparatus of claim 16 wherein said means for moving said tube end positioning means in synchronization with movement of said wall of packaging material comprises:

a. a pair of sprockets rotatably mounted on axes extending parallel to the axis of said spokes,

b. means for driving at least one of said sprockets in synchronization with the movement of said wall of packaging material,

c. an endless chain wrapping said sprockets and having a reach extending in spaced parallel relationship to said linear movement of said tube carrying heads, and

d. means mounting said base members and said stop members on said chain.

18. The apparatus of claim 17 further comprising:

a. conduit means for carrying said tubes to said tube end positioning means.

19. Apparatus for attaching a dispensing tube to a bag formed of flexible packaging material comprising:

a. means for positioning an open end of said dispensing tube adjacent the outside of a wall of said bag,

b. means for positioning a tube fastener within said bag in opposition to said end of said tube, and

c. means for bringing said tube fastener and said tube into engagement with each other with a portion of said wall of said bag clamped therebetween.

20. The apparatus of claim 19 wherein said means for positioning a tube fastener within said bag includes:

a. means for inserting said tube fastener into said bag through an open mouth thereof, and

b. means for moving said tube fastener in a direction substantially normal to said wall of said bag and into engagement with said tube end.

21. The apparatus of claim 20 wherein said bag to which said tube is attached is moving and further comprising:

a. means for moving said tube in synchronization with said bag, and

b. means for moving said tube fastener in synchronization with said bag while said tube fastener is positioned within said bag.

22. The apparatus of claim 21 wherein:

a. said tube positioning means and said tube fastener positioning means move with a substantially linear movement as said tube fastener and said tube are engaged through said wall of said bag.

23. A tube applicator comprising:

a. an unwind stand for holding a roll of open top bags in web form,

b. means for gripping upper edges of said open top bags and unwinding them from said roll with a continuous, nonintermittent movement,

c. a conduit for delivering flexible tubes to a position adjacent an outer side of said web of bags,

d. a tube carrier for gripping said tubes, blocking passage therethrough and bending one end thereof through approximately 90° into engagement with said outer side of said web of bags,

e. an endless chain trained about spaced apart sprockets and bearing said tube carriers,

f. means for driving at least one of said sprockets in synchronism with said unwinding means,

g. a Geneva wheel mounted for rotation about an axis parallel to the axes of said sprockets and driven by engagement with said tube carriers,

h. a base wheel driven by rotation of said Geneva wheel about a common axis and having outwardly projecting spokes,

i. means defining outwardly and oppositely opening sets of channels in said spokes,

j. a pair of intersecting master slide arms received in and slidable within one of said sets of channels opening outwardly in one direction,

k. a cam follower mounted on each end of each of said master slide arms,

l. a cam track engageable by said slide arm cam followers and having a horizontal branch coextensive with a portion of an upper reach of said tube carriers endless chain and upstream and downstream branches curving into and away from said horizontal branch,

m. a pair of intersecting slave slide arms lying in substantially the same vertical plane as said open top bags and received in and slidable within a second of said sets of channels opening outwardly in a direction opposite to said one set of channels,

n. interconnecting pins extending from each of said master slide arms through slots formed in said channels and into corresponding ones of said slave slide arms to cause sliding movement thereof into and out of said open top bags in response to sliding movement of said master slide arms,

o. a lever mounted on each end of each of said slave slide arms for pivotal movement about an axis perpendicular to said common axis of said base and Geneva wheels,

p. each of said levers including a cam follower mounted on one end thereof and a grommet carrying head mounted on an opposite end thereof,

q. cam tracks carried by and extending longitudinally of said second set of channels and engageable by said lever cam followers such that sliding movement of said slave slide arms in said second set of channels will cause said grommet carrying heads to pivot outwardly of said second set of channels when said slave slide arms are adjacent their uppermost and lowermost positions during rotation thereof within said second set of channels of said base wheel,

r. means for positioning a grommet adjacent said uppermost position of said slave slide arms for engagement by said grommet carrying heads as they pivot outwardly of said second set of channels,

s. each of said grommet carrying heads being positioned within one of said open top bags opposite the bent over end of one of said tubes as said grommet carrying heads pivot outwardly adjacent said lowermost position to cause a grommet to enter an end of a tube positioned oppositely thereto, and

t. means for delivering pressurized air through said grommet carrying head as a grommet carried thereby enters an end of a tube to assist in puncturing a wall of a bag and expand said tube end to facilitate entry of the grommet thereinto.

24. A method of applying tubes to the walls of moving bags comprising:

a. positioning a tube adjacent one side of a wall of a bag and maintaining an end of the tube in that position during movement of the bag,

b. positioning a tube fastener on an opposite side of the wall of the bag opposite said tube end and maintaining said tube fastener in position opposite said tube end during movement of the bag, and

c. moving said tube end and tube fastener into engagement with each other as said bag continues to move, thereby attaching said tube to said bag with a portion of the wall thereof gripped between said tube end and said tube fastener.

25. The method of claim **24** wherein said step of positioning said tube fastener comprises:

a. inserting said tube fastener into said bag.

26. The method of claim **25** wherein said step of moving said tube end and a tube fastener with said bag comprises:

a. moving said tube end and tube fastener along a linear path.

27. The method of claim **24** wherein said step of bringing said tube end and said tube fastener into engagement comprises:

a. telescopically engaging said tube fastener with said tube end, and

b. injecting a pressurized fluid through said tube fastener as said tube fastener is telescopically engaged with said tube.

28. The method of claim **27** further comprising:

a. closing said tube at a point spaced from said end thereof prior to the injection of pressurized fluid through said tube fastener to cause said tube to expand as pressurized fluid is injected through said tube fastener to facilitate insertion of said fastener into said tube.

* * * * *