Sept. 14, 1926. 1,599,700

W. W. DAVIDSON

BLANK FEEDING DEVICE

Original Filed Sept. 10, 1915 4 Sheets-Sheet 1

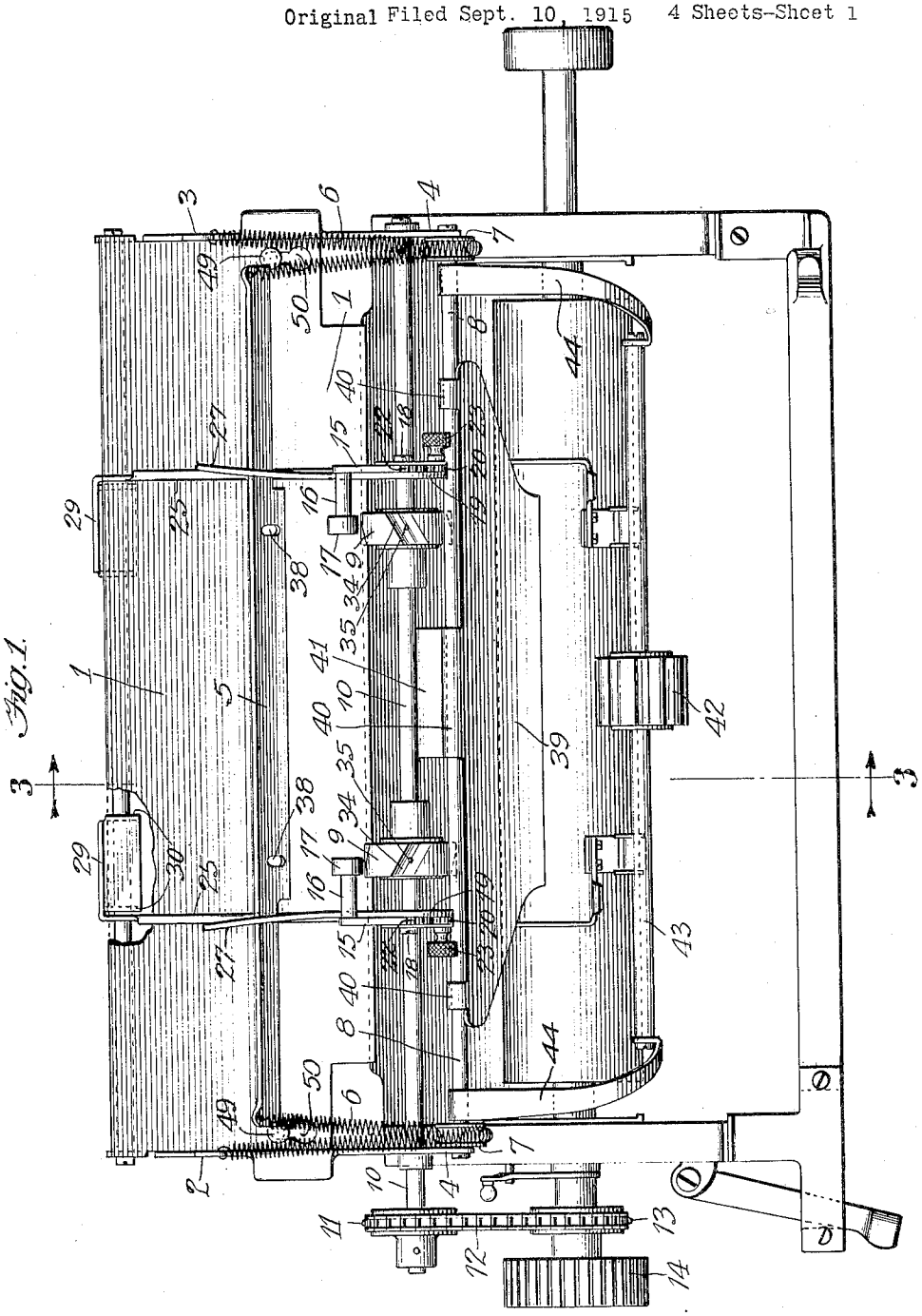

Fig. 1.

Witnesses
Martin H. Olsen.
F. M. Reichel.

Inventor
Wm Ward Davidson.
By Jno. E. Waldo, Atty.

Sept. 14, 1926. 1,599,700

W. W. DAVIDSON

BLANK FEEDING DEVICE

Original Filed Sept. 10, 1915 4 Sheets-Sheet 2

Fig. 2.

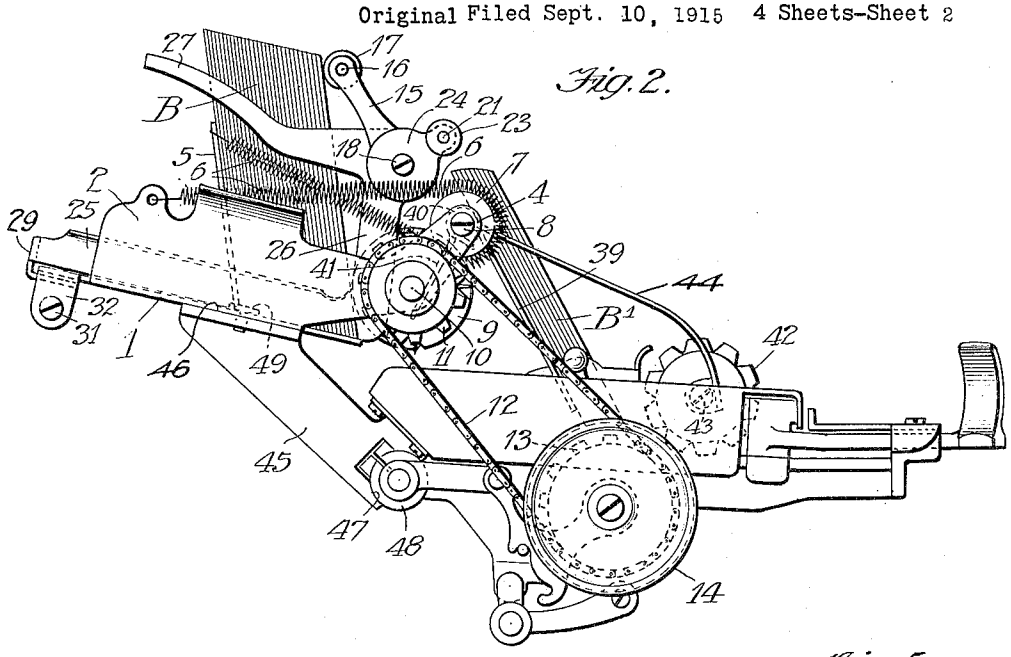


Fig. 5.

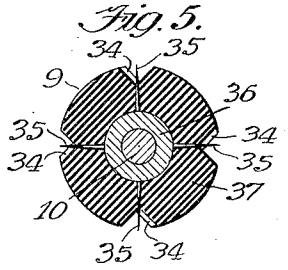


Fig. 3.




Witnesses.
Martin H. Olsen.
F. M. Reichel

Inventor
Wm Ward Davidson
By Wm. Elwood
Atty.

Sept. 14, 1926. 1,599,700

W. W. DAVIDSON

BLANK FEEDING DEVICE

Original Filed Sept. 10, 1915 4 Sheets-Sheet 3

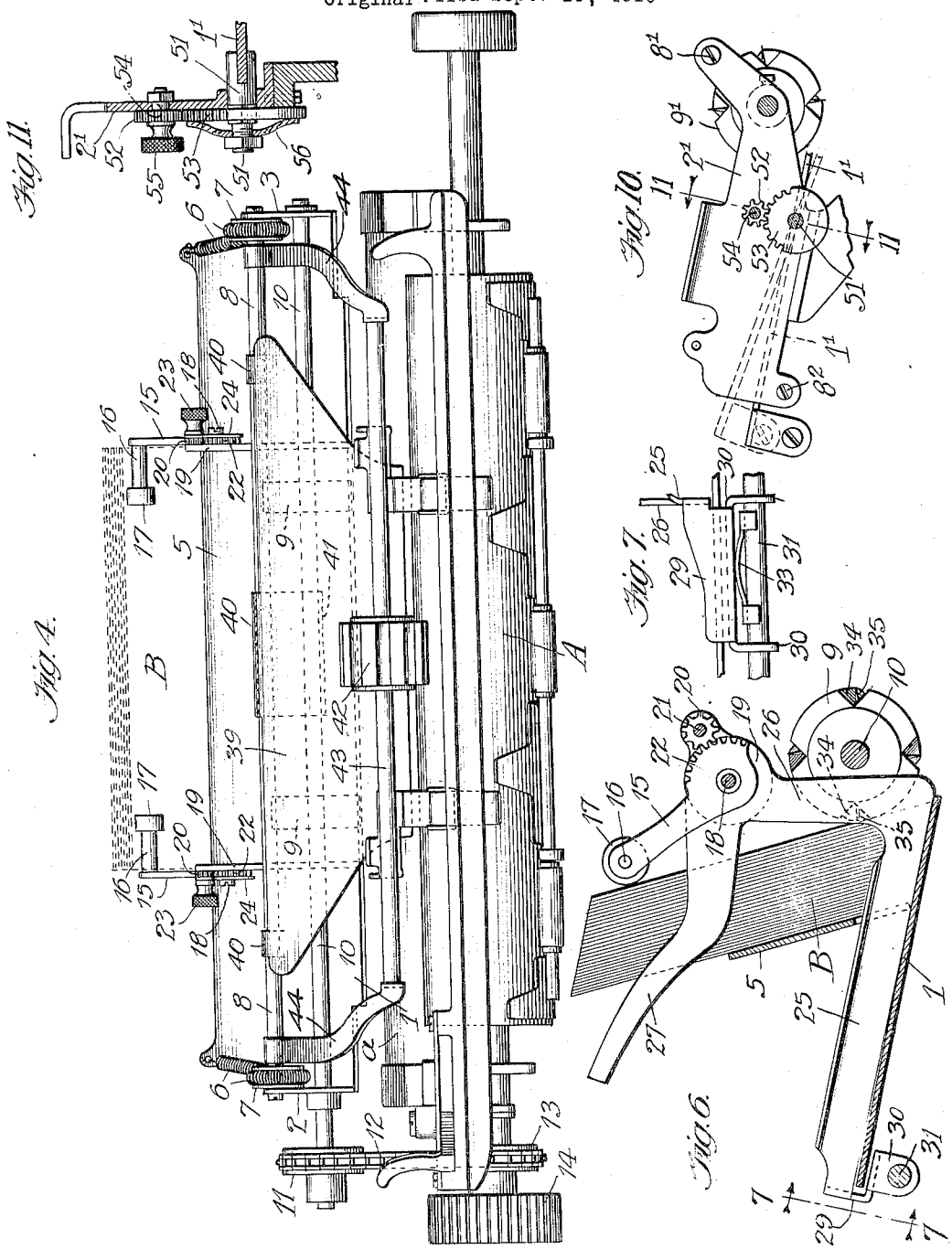


Witnesses
Martin H. Olsen.
J. M. Reichel.

Inventor
Wm Ward Davidson
By Jas. E. Ubaldo,
Atty.

Sept. 14, 1926. 1,599,700

W. W. DAVIDSON

BLANK FEEDING DEVICE

Original Filed Sept. 10, 1915 4 Sheets-Sheet 4

Fig. 8.

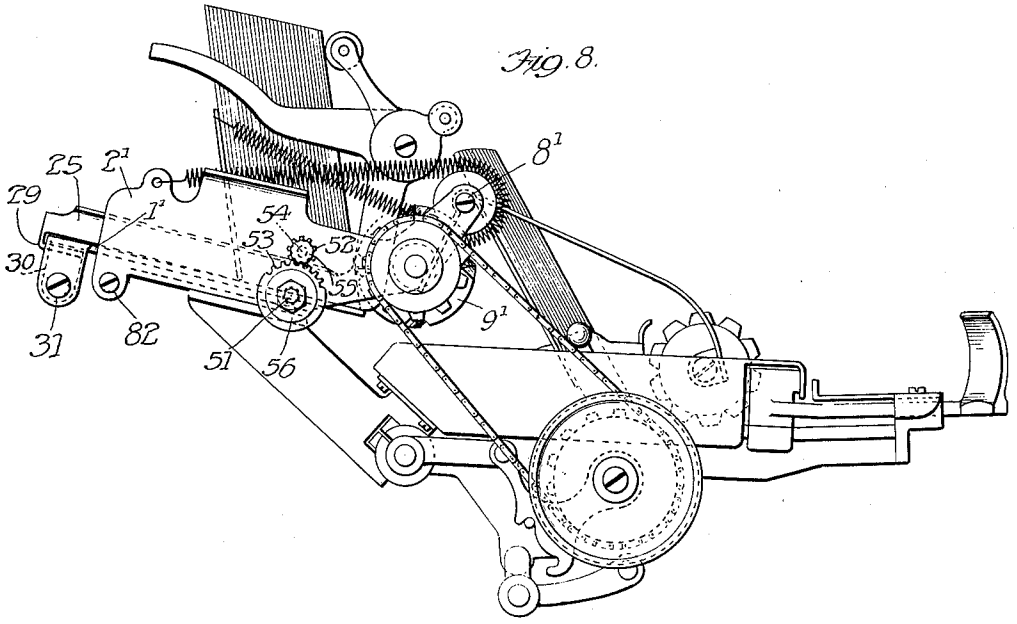


Fig. 9.

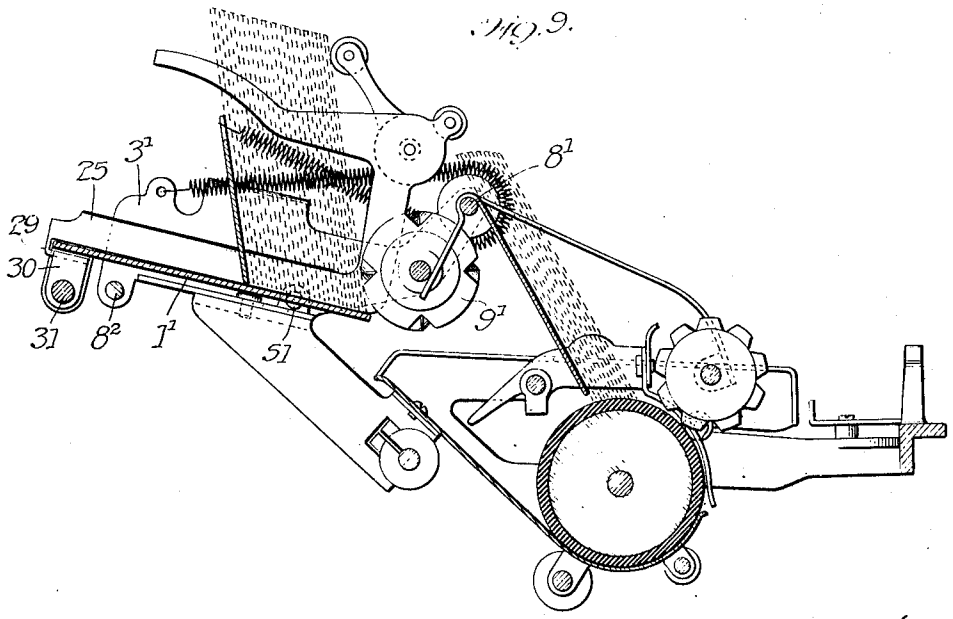


Witness
Martin H. Olsen.

Inventor
Wm Ward Davidson
By Geo. E. Waldo
Atty

Patented Sept. 14, 1926. 1,599,700

# UNITED STATES PATENT OFFICE.

WILLIAM WARD DAVIDSON, OF CHICAGO, ILLINOIS, ASSIGNOR TO DAVIDSON MANUFACTURING COMPANY, OF MADISON, WISCONSIN, A CORPORATION OF WISCONSIN.

## BLANK-FEEDING DEVICE.

Application filed September 10, 1915, Serial No. 49,902. Renewed November 3, 1919. Serial No. 335,473.

This invention relates to blank feeding devices, designed for feeding sheets of paper, envelopes, cards and the like.

The object of the invention is to provide a feeding device for the purpose specified, which shall be effective for its designed purpose, which shall have a relatively large feeding capacity, and which can be readily adjusted and adapted for feeding paper, envelopes, cards, etc., of different size, thickness, roughness and stiffness.

To this end, a feeding device of my invention comprises the various features, combinations of features and details of construction hereinafter described and claimed.

In the accompanying drawings, in which my invention is fully illustrated:—

Figure 1 is a top plan view of a feeding device of my invention, shown in operative association with parts of a standard form of typewriter.

Figure 2 is a side view thereof.

Figure 3 is a sectional view thereof on the line 3—3 of Fig. 1.

Figure 4 is a front view of my improved feeding device, likewise shown in operative association with parts of a standard form of typewriter.

Figure 5 is an enlarged sectional view of the feed roller of my improved feeding device.

Figure 6 is a separate side view, on an enlarged scale, of one of the guides for confining the blanks within the magazine and for varying the inclination of said blanks.

Figure 7 is a fragmentary detail view from the position 7—7 of Fig. 6 showing the means for supporting the guides for confining the blanks on the bottom plate.

Figures 8 and 9 are side and sectional views substantially similar to Figs. 2 and 3, illustrating a contemplated modification of my improved feeding device.

Figure 10 is a fragmentary side view illustrating a contemplated modification of my improved feeding device; and

Figure 11 is a sectional view on the line 11—11 of Fig. 10.

In the accompanying drawings, I have for purposes of illustration, shown my improved feeding device as applied in use to a standard form of typewriter. I desire it understood, however, that this application is merely illustrative and that I do not desire thereby to limit myself to its use on or in connection with typewriters, as it admits of a wide range of application and use.

My improved feeding device is adapted to be applied to any standard form of typewriter without in any way changing or modifying the construction of said typewriter, my said feeding device being entirely separate and distinct from the typewriter and being so constructed and arranged that it may be quickly and conveniently attached to and removed from the typewriter, as may be desired. In the drawings, I have, therefore, shown only those parts of the typewriter with which my improved feeding device co-operates directly, including the platen roll A and the paper table *a*.

In the preferable form of my improved feeding device, shown in Figs. 1 to 7, inclusive, of the drawings to which particular reference is made, the blank receptacle proper, which contains the paper, envelopes, cards or other blanks which are to be fed consists of a bottom plate 1 and side plates 2 and 3 in which the operative parts of the device are mounted. In the preferable construction shown, the side plates 2 and 3 are preferably formed integral with the bottom plate 1 and, for lightness, are preferably made of aluminum, being stamped from an aluminum sheet of proper thickness to provide necessary strength and stiffness to the structure.

The side plates 2 and 3 comprise arms 4 which, when the device is attached to a typewriter, extend frontwards over the platen carriage of the typewriter and which form supports for various parts of the device, as presently described.

The rear side of the blank receptacle is formed by a plate 5, which is adapted to be maintained at the limit of its movement towards the front of said blank receptacle by a suitable spring or springs applied thereto. As shown, this is effected by coiled springs 6, opposite ends of which are attached to the lateral edges of said back plate and to rigid parts of the frame of the blank receptacle, as shown, to the side plates 2 and 3. Between their ends, said springs pass around grooved rollers 7 rotatably mounted on a rod 8, secured in the front ends of the arms 4 and is positioned at a considerable distance in front of the extreme frontwards position of said back plate 5.

Rotatably mounted in the arms 4 adjacent

to the front and bottom sides of the blank receptacle, is a feed roll 9, the shaft or spindle 10 of which projects through the side frame 2 and has secured thereto a sprocket wheel 11, rotation being imparted to said feed roll from the shaft of the platen roll A by means of a chain belt 12 adjusted to said sprocket wheel 11 and to a sprocket wheel 13 secured to rotate with the shaft of the platen roll of the typewriter. For convenience, the sprocket wheel 13 is preferably formed integral with a knob 14 secured to the platen roll shaft in place of the usual knob provided for turning said platen roll.

For purposes of illustration, I have shown a packet of blanks, as envelopes, designated B, contained in the blank receptacle and which are designed and adapted to be fed therefrom singly and in succession to the platen roll A of the typewriter and to the feed mechanism associated therewith.

The springs 6 will operate to draw the back plate 5 of the blank receptacle towards the feed roll 9 and, in use, will maintain the frontmost blank of the packet of blanks B contained in said blank receptacle in contact with said feed roll.

Tilting of the back plate 5 due to the action of the springs 6, is prevented and the inclination of said back plate is defined by means of adjustable stops adapted to contact with the front side of said back plate adjacent to its upper edge or with the frontmost blank B contained in the blank receptacle. As shown, said stop consists of arms 15 pivoted to suitable supports so as to be adjustable transversally of the blank receptacle, secured in the upper ends of which and which project inwardly therefrom are studs 16, rotatably mounted at the ends of which are rollers 17 which are adapted to engage the front side of the plate 5 or of the frontmost blank B contained therein. The arms 15 are adapted to be secured in different pivotal positions by means of suitable stops provided for the purpose, thus providing for imparting different inclinations to the back plate 5 and to the blanks B supported thereby.

As shown, said arms 15 are pivoted to studs 18 secured in screw threaded engagement with holes formed in guides 19 supported within the blank receptacle and adjustable transversally thereof and which are adapted to embrace the ends of the blanks B and to confine the same laterally in proper relation to the feed roll 9. Said arms 15 are adapted to be turned pivotally by means of pinions 20 secured to rotate with arbors 21 rotatably mounted in the guides 19 which intermesh with segmental gears 22 formed on the stop arms 15, concentric with the pivots thereof. The arbors 21 and the pinions attached thereto are adapted to be turned pivotally, thereby imparting corresponding pivotal movement to the stop arms 15, by means of knobs or finger grips 23 formed on said arbors 21, and said stop arms 15 are adapted to be maintained in different adjusted positions by means of friction disks or plates 24 mounted on the pivot studs 18 of said stop arms outside of said arms and which are adapted to be drawn into strong frictional engagement with said stop arms adjacent to their pivots by means of said pivot studs 18 the heads of which embrace the outer sides or surfaces of said friction disks or plates. With the described construction, it is obvious that said stop arms 15 will be adjustable independently of each other.

As shown the guides 19 are formed by skeleton frames comprising lower members 25 which rest on the bottom plate 1 of the blank receptacle, upright members 26, and members 27 formed at the upper ends of said upright members 26 and which project rearwardly therefrom, the extreme rear ends of said members 27 being preferably outwardly flared to a slight extent. As shown, the stop arms 15 are pivoted to the guides 19 substantially at the juncture of the members 26 and 27 of said guides.

The guides 19 are supported in upright position in the following manner, (see particularly Fig. 7) :—Formed on the rear ends of the lower members 25 of said guides are lateral projections 29 which extend below the bottom plate 1 and which comprise spaced lugs 30 which are provided with bearings for a rod 31 secured in lugs 32 which depend from the bottom plate 1 at its rear edge. The bearing lugs 30 on each guide 19 are spaced a sufficient distance apart to provide a stable support for said guides. Also, to prevent the guides 19 from sliding too easily, means, preferably friction means, are provided for lightly engaging said guides with a fixed part of the blank receptacle. As shown, said means consists of springs 33 inserted between the lateral projections 29 on the rear ends of said guides and the rod 31 secured in the bottom plate 1.

In the operation of my improved device, the lower edges of the blanks B will rest upon the inclined bottom plate 1, the position and length of said bottom plate being such that planes tangent to the rear side of the feed roll and parallel with different operative positions of the blank supporting means of the blank receptacle, will intersect said bottom plate closely adjacent to its front edge, so that the action of the feed roll 9, when turned, will force the lower edge of the front blank, which is in contact with said feed roll, off from the edge of the bottom plate 1 and feed said blank downwards to the feed devices associated with the platen roll A of the typewriter.

The springs 6 applied to the back plate

5 will draw said back plate, together with the packet of blanks B in the blank receptacle, frontwards so that the front blank will rest in contact with the feed roll 9.

It will obviously require more power to force relatively thick, stiff blanks off from or over the edge of the bottom plate 1 than will be required in the case of thinner and more flexible blanks, also, more space will be required between the front edge of said bottom plate 1 and the feed roll 9 for thicker blanks than for thinner blanks. My improved feeding device may be readily adapted for effectively working both on relatively thick, stiff blanks and on thin, flexible blanks, by varying the inclination of the blanks relative to the bottom plate and the position of the front blank relative to the front edge of said bottom plate. Necessary adjustments to adapt the device to meet the different conditions above enumerated may be readily effected by varying the adjustment of the arms 15 to increase or decrease the inclination of the back plate 5 and thus of the blanks B relative to the bottom plate 1, said back plate being adjusted towards the vertical for operating on relatively thin blanks and towards the horizontal when working on thicker and stiffer blanks. The proper adjustment of said back plate for blanks of different thickness and stiffness is a matter of experience, which can readily be acquired by skilled persons using the device.

To insure engagement of the feed roll 9 with the blanks B whereby said blanks will be discharged from the blank receptacle and delivered to the feed devices associated with the platen roll A, said feed roller is grooved spirally, as shown at 34, said groove or grooves comprising sections of opposite pitch at opposite ends of said feed roll, and secured in said feed roll in such position that they will project into said grooves 34 are pins 35, said pins being of such length that the points thereof will terminate substantially in the cylindrical surface of said roll. As shown, said feed roll comprises a rigid core 36 in which said pins are secured and an outer section or covering 37 of rubber, composition or other suitable yielding material. Thus, as said feed roll rotates, the pressure of the roller 9 against the blanks B will operate to slightly compress the outer yielding section of the feed roll, where it contacts with the front blank, whereby the pins 35, which are rigidly supported by the core 36 of the feed roll, will be caused to protrude very slightly beyond the surface of the feed roll which contacts with the blanks B so as to engage the frontmost blank, thus insuring the feeding of said blanks in the manner designed. I do not, however, desire to limit myself to this particular form of feed roll, as my invention contemplates equally the use of any desired or approved form of feed roll suitable for the purpose.

As shown, said feed roll 9 consists of short sections spaced apart lengthwise of the feed roll shaft or spindle 10, whereby the full pressure of the springs 6 applied to the back plate 5 of the magazine will be applied directly adjacent to the pins 35 instead of being distributed throughout the length of the feed roll, as would be the case if a continuous feed roll were used, thereby insuring that said pins will protrude in the manner desired when they come into position to engage a blank B.

When the guides 19, on which the stop arms 15 are mounted, are separated so as to bring the rollers 17 mounted on said arms beyond the ends of the back plate 5 and there are no blanks in the magazine, the springs 6 will throw the back plate 5 frontwards so that it will rest upon the feed roll 9 and, if said feed roll is rotated with said back plate in contact therewith, the pins 35 in said feed roll will be brought into contact with said back plate so that the points thereof will be dulled and will not engage the blanks B in the manner intended. To overcome this objection, slots 38 are formed in said back plate in line with the pins 35, which are arranged in rows circumferentially of the feed roll. Thus, in case said back plate is brought into contact with the feed roll, the pins 35 will enter the slots 38 in the back plate and will not be blunted or damaged by contact with said plate.

Preferably, also, my improved feeding device comprises means for receiving the blanks from the platen roll A of the typewriter and for retaining them in such manner and in such position that they may be quickly and conveniently removed when necessary or desired.

In the preferable construction shown, said means consists of a plate 39 supported above and at the rear side of the platen roll A in such position that the blanks B, having passed around the platen roll A, their upper ends will come into contact with the upper edge of said plate 39, which will support said blanks in such position that the lower edges of said blanks will frictionally engage the surface of the platen roll with sufficient force to cause their said lower edges to ride over said platen roll and thus bring said blanks into flat contact with said plate 39, whereby said blanks will be supported in substantially upright position with their lower edges resting upon the platen roll A, as shown at $B^1$, in which position they may be conveniently grasped and removed by the operator.

As shown, the plate 39 is supported by means of hooks 40 formed on its upper edge

which are adapted to engage the rod 8, one of said hooks, as shown the center hook, being extended as shown at 41, so as to take under the feed roll shaft 10, the relation being such that said plate 39 will be rearwardly and upwardly inclined and the plane thereof will extend substantially through or slightly in the rear of the axis of the shaft of the platen roll A. To prevent the blanks $B^1$ from being carried down back of the platen roll A, the lower edge of the plate 39 preferably extends into close proximity to the surface of said platen roll.

To provide for delivering blanks from the usual feed devices associated with the platen roll into contact with the plate 39, I provide a roll 42 mounted to rotate freely on a shaft or rod 43 secured in the ends of arms 44 pivoted to the rod 8, preferably by means of hooks, thus providing for conveniently attaching and removing said arms and thus the shaft 43 and feed roll 42, if desired. The feed roll 42 is preferably made of rubber, or composition and is grooved lengthwise. Also, as shown, said feed roll is made relatively very short as compared with the length of the platen roll A.

My improved feeding device is adapted to be mounted directly upon the platen carriage in such manner that it may quickly and conveniently be adjusted thereto, when wanted for use, and removed therefrom when not in use.

As shown, the means for attaching said feeding device are as follows:—Secured to the frame of the platen carriage, preferably as permanent attachments, are brackets 45 provided at their upper end with seats 46 on which the bottom plate 1 of the blank receptacle is adapted to rest, said seats being preferably inclined forwardly and downwardly at an angle of substantially 15 degrees to the horizontal, whereby corresponding inclination will be imparted to the blank receptacle. As shown, seats 47 are formed at the lower ends of the brackets 45 which are adapted to receive bosses 48 forming rigid parts of the frame of the platen carriage, and said brackets being rigidly connected to a part of the platen carriage, as to the paper table *a* by means of screws inserted through said paper table and threaded into said brackets.

Secured in the brackets 45 and projecting above the seats 46 thereon are headed studs 49 which are adapted to engage key-hole slots 50 formed in the bottom plate 1 of the blank receptacle.

With the described construction, it is obvious that my improved feeding device may very quickly be adjusted to and removed from the platen carriage by merely engaging or disengaging the studs 49 on the brackets 45 with the key-hole slots 50 in the bottom plate 1.

The brackets 45 shown in the drawings, are particularly designed and adapted for use on an Underwood typewriter and may possibly be used on other makes of typewriters. If not, it will be necessary to design special brackets 45 for typewriters on which the brackets shown are not adapted for use. Having any given make of typewriter, however, this can be readily done by skilled mechanics familiar with work of this character.

As a modification of my improved feeding device, and to adapt the same for feeding very stiff, thick blanks, and very thin flexible blanks, instead of the fixed bottom plate 1, I contemplate the use of a tilting bottom plate, thereby providing for varying the inclination of said bottom plate and also the width of the space between the front edge of said bottom plate and the feed roll of the device.

This modification is illustrated in Figs. 8 to 11 of the drawings and will now be described.

As in the preferred form of my improved feeding device shown in Figs. 1 to 7 of the drawings and heretofore described, the blank receptacle proper which contains the blanks to be fed, consists of a bottom plate $1^1$ and side plates $2^1$, $3^1$, said side plates being rigidly connected by transverse rods $8^1$, $8^2$, and the bottom plate being pivoted to said side plates, preferably at some distance from its front end, so that pivotal movement of said bottom plate not only will vary its inclination but, also, the distance between the front edge of said bottom plate and the feed roll $9^1$.

As shown, the bottom plate $1^1$ is pivotally supported by trunnions 51 thereon which engage suitable bearings in the side plates, said trunnions being preferably positioned on the lateral edges of said bottom plate, at a distance from the front edge of said plate substantially equal to one-quarter of the dimension of said bottom plate from its front to its rear edge. This relation may, however, be varied as desired.

Tilting motion is adapted to be imparted to said bottom plate $1^1$ by means of a pinion 52 rotatably mounted on one of the side plates of the magazine, as shown the side plate $2^1$, and which intermeshes with a segmental gear 53 secured to rotate with a trunnion 51. As shown, the pinion 52 is secured to rotate with an arbor 54 rotatably mounted in the side frame $2^1$ and which is adapted to be turned by means of a knob or finger grip 55 on said arbor 54.

Means are also provided for securing said bottom plate $1^1$ in different adjusted positions. As shown, said securing means consists of a friction disk 56 mounted on the trunnion 51 to which the gear 53 is secured, between the outer side of said gear and a

nut 57 threaded to a projecting end of said trunnion. Said friction disk is preferably slightly dished, whereby the friction thereof will be applied at a distance from its axis in which position it will be most effective.

With the described construction, it is obvious that the bottom plate $1^1$ may be moved pivotally to either increase or decrease the inclination thereof and that such tilting action will also operate to correspondingly increase or decrease the distance between the front edge of said bottom plate and the feed roll $9^1$, as the inclination of said bottom plate is increased or decreased, in the manner desired.

While I prefer frictional means for maintaining the bottom plate $1^1$ in position, I do not desire to limit myself thereto as skilled mechanics can readily devise other and positive means for the purpose.

Excepting in the respects herein particularly pointed out and described, the modified form of my improved feeding device is substantially identical in construction with the preferred form thereof shown in Figs. 1 to 7 of the drawings and heretofore described, and will be readily understood by persons skilled in the art from an inspection of the drawings illustrating said modification, in connection with such prior description. In so far, therefore, as the modified form of my improved feeding device is a duplicate of the preferred form thereof, it is deemed unnecessary and undesirable to separately describe the same, as to do so would merely result in needlessly extending and complicating the specification—obscuring rather than elucidating the invention.

I claim:—

1. In a device of the type described, the combination of a receptacle for blanks, comprising a bottom plate, a feed roll mounted therein in close proximity to the front edge of said bottom plate, means for supporting blanks in edgewise position on said bottom plate with the front blank in contact with said feed roll and resting upon said bottom plate closely adjacent to its front edge and for advancing said blanks yieldingly towards said feed roll, and means for varying the relative inclination of said blank supporting means and bottom plate, substantially as described.

2. In a device of the type described, the combination of a receptacle for blanks comprising a bottom plate, a feed roll mounted therein in close proximity to the front edge of said bottom plate, means for supporting blanks in edgewise position on said bottom plate with the front blank in contact with said feed roll and resting upon said bottom plate closely adjacent to its front edge, said blank supporting means comprising an adjustable and bodily movable back plate, means for advancing said back plate yieldingly towards said feed roll, and means for varying the inclination of the back plate and of the supported blanks, substantially as described.

3. In a device of the type described, the combination of a receptacle for blanks comprising a bottom plate, a feed roll mounted therein in close proximity to the front edge of said bottom plate, means for supporting blanks in edgewise position on said bottom plate with the front blank in contact with said feed roll and resting upon said bottom plate closely adjacent to its front edge, said blank supporting means comprising an adjustable and bodily movable back plate, springs applied to said back plate adapted for advancing said back plate towards the feed roll, and means for varying the inclination of said back plate and of the supported blanks, substantially as described.

4. In a device of the type described, the combination of a receptacle for blanks comprising a bottom plate, a feed roll mounted therein in close proximity to the front edge of said bottom plate, means for supporting blanks in edgewise position on said bottom plate with the front blank in contact with said feed roll and resting upon said bottom plate closely adjacent to its front edge, the front edge of said bottom plate being straight, substantially as described.

5. In a device of the type described, the combination of a receptacle for blanks comprising a bottom plate, a feed roll mounted therein in close proximity to the front edge of said bottom plate, means for supporting blanks in edgewise position on said bottom plate with the front blank in contact with said feed roll and resting upon said bottom plate closely adjacent to its front edge, and means for varying the relative inclination of said blank supporting means and bottom plate, the front edge of said bottom plate being straight, substantially as described.

6. In a device of the type described, the combination of a receptacle for blanks comprising a bottom plate, a feed roll mounted therein in close proximity to the front edge of said bottom plate, means for supporting blanks in edgewise position on said bottom plate with the front blank in contact with said feed roll and resting upon said bottom plate closely adjacent to its front edge, and means for varying the relative inclination of said blank supporting means and bottom plate, the front edge of said bottom plate being straight, and the relation being such that the inclination of said blanks will remain constant in all adjusted positions of said blank supporting means, substantially as described.

7. In a device of the type described, the combination of a receptacle for blanks comprising a bottom plate, a feed roll mounted therein in close proximity to the front edge

of said bottom plate, means for supporting blanks in edgewise position on said bottom plate with the front blank in contact with said feed roll and resting upon said bottom plate closely adjacent to its front edge, and means for varying the inclination of said blank supporting means relatively to said bottom plate, the relation being such that the inclination of said blanks will remain constant in all adjusted positions of said blank supporting means, substantially as described.

8. In a device of the type described, the combination of a receptacle for blanks, comprising a bottom plate, a feed roll mounted therein in close proximity to the front edge of said bottom plate, means for supporting blanks in edgewise position on said bottom plate with the front blank in contact with said feed roll and resting upon said bottom plate closely adjacent to its front edge, said blank supporting means comprising an adjustable stop adapted to bear against the front side of the blanks contained in said receptacle and which defines the inclination of the blanks, and means for securing said stop in different adjusted positions to provide for varying the inclination of the blanks, substantially as described.

9. In a device of the type described, the combination of a receptacle for blanks comprising a bottom plate, a feed roll mounted therein in close proximity to the front edge of said bottom plate, means for supporting blanks in edgewise position on said bottom plate with the front blank in contact with said feed roll and resting upon said bottom plate closely adjacent to its front edge, said blank supporting means comprising an adjustable and bodily movable back plate, springs applied thereto adapted for advancing said back plate yieldingly towards the feed roll, an adjustable stop adapted to bear against the front side of the blanks contained in said receptacle and which defines the inclination of the blanks, and means for securing said stop in different adjusted positions to provide for varying the inclination of the blanks, substantially as described.

10. In a device of the type described, the combination of a receptacle for blanks, comprising a bottom plate, a feed roll mounted therein in close proximity to the front edge of said bottom plate, means for supporting blanks in edgewise position on said bottom plate with the front blank in contact with the feed roll, and means for varying the inclination of said blank supporting means, the relation being such that the lower edge of the front blank will rest on the bottom plate closely adjacent to its front edge in all operative adjustments of the blank supporting means, substantially as described.

11. In a device of the type described, the combination of a receptacle for blanks, comprising a bottom plate, a feed roll mounted therein in close proximity to the front edge of said bottom plate, means for supporting blanks in edgewise position on said bottom plate with the front blank in contact with the feed roll, and means for varying the inclination of said blank supporting means and of said bottom plate relative to each other, the relation being such that the lower edge of the front blank will rest on the bottom plate closely adjacent to its front edge in all operative adjustments of the blank supporting means, substantially as described.

12. In a device of the type described, the combination of a blank receptacle, comprising an adjustable bottom plate, a feed roll mounted therein in close proximity to the front edge of said bottom plate, adjusting means for said bottom plate whereby the space between the front edge thereof and the feed roll may be varied, and adjustable means for supporting blanks in edgewise position on said bottom plate whereby the inclination of the blanks relative to the bottom plate may be varied, and the relation being such that the lower edge of the front blank will rest upon the bottom plate adjacent to its front edge, substantially as described.

13. In a device of the type described, the combination of a blank receptacle, comprising an adjustable bottom plate, a feed roll mounted therein in close proximity to the front edge of said bottom plate, adjusting means for said bottom plate whereby the inclination and the space between its front edge and the feed roll may be varied, and adjustable means for supporting the blanks in edgewise position on said bottom plate whereby the inclination of the blanks relative to the bottom plate may be varied, and the relation being such that the lower edge of the front blank will rest upon the bottom plate adjacent to its front edge, substantially as described.

14. In a device of the type described, the combination of a blank receptacle, comprising an adjustable bottom plate, a feed roll mounted therein in close proximity to the front edge of said bottom plate, adjusting means for said bottom plate whereby its inclination may be varied, and adjustable means for supporting the blanks in edgewise position on said bottom plate whereby the inclination of the blanks relative to the bottom plate may be varied, and the relation being such that the lower edge of the front blank will rest upon the bottom plate adjacent to its front edge, substantially as described.

15. In a device of the type described, the combination of a blank receptacle, comprising a pivoted bottom plate, a feed roll mounted therein in close proximity to the front edge of said bottom plate, and means

for securing said plate in different pivotal adjustments, the relation being such that varying the pivotal adjustment of said bottom plate will vary the width of the space between the front elge of said bottom plate and the feed roll, and adjustable means for supporting the blanks in edgewise position on said bottom plate whereby the inclination of the blanks relative to the bottom plate may be varied, and the relation being such that the lower edge of the front blank will rest upon the bottom plate adjacent to its front edge, substantially as described.

16. In a device of the type described, the combination of a blank receptacle, comprising a bottom plate, a feed roll mounted therein in close proximity to the front edge of said bottom plate, trunnions on said bottom plate fitted to bearings in the side frame members of the blank receptacle, means for securing said bottom plate in different pivotal adjustments, the relation being such that varying the pivotal adjustment of said bottom plate will vary the width of the space between the front edge of said bottom plate and the feed roll, and adjustable means for supporting the blanks in edgewise position on said bottom plate whereby the inclination of the blanks relative to the bottom plate may be varied, and the relation being such that the lower edge of the front blank will rest upon the bottom plate adjacent to its front edge, substantially as described.

17. In a device of the type described, the combination of a blank receptacle, comprising a bottom plate, a feed roll mounted therein in close proximity to the front edge of said bottom plate, trunnions on said bottom plate fitted to bearings in the side frame members of the blank receptacle, means for turning said bottom plate pivotally and for securing said bottom plate in adjusted position, the relation beiug such that varying the pivotal adjustment of said bottom plate will vary the width of the space between the front edge of said bottom plate and the feed roll, and adjustable means for supporting the blanks in edgewise position on said bottom plate whereby the inclination of the blanks relative to the bottom plate may be varied, and the relation being such that the lower edge of the front blank will rest upon the bottom plate adjacent to its front edge, substantially as described.

18. In a device of the type described, the combination of a blank receptacle, comprising a bottom plate, a feed roll mounted therein in close proximity to the front edge of said bottom plate, and adjustable means for supporting the blanks in edgewise position on said bottom plate, said means comprising a back plate, means for advancing said back plate towards said feed roll, and adjustable stops adapted to contact with the front side of said back plate or with the blanks supported thereby, substantially as described.

19. In a device of the type described, the combination of a blank receptacle, comprising a bottom plate, a feed roll mounted therein in close proximity to the front edge of said bottom plate, and adjustable means for supporting the blanks in edgewise position on said bottom plate, said means comprising a back plate, means for advancing said back plate towards said feed roll, pivoted arms supported so as to be laterally adjustable relative to said back plate, means for securing said arms in different pivotal adjustments, and projections on said arms adapted to contact with the front side of said back plate or with the blanks supported thereby, substantially as described.

20. In a device of the type described, the combination of a blank receptacle, comprising a bottom plate, a feed roll mounted therein in close proximity to the front edge of said bottom plate, and adjustable means for supporting the blanks in edgewise position on said bottom plate, said means comprising a back plate, means for advancing said back plate towards said feed roll, pivoted arms supported so as to be laterally adjustable relative to said back plate, rigid parts of which are adapted to contact with the front sides of said back plate or with the blanks supported thereby, and frictional means for securing said arms in different pivotal adjustments, substantially as described.

21. In a device of the type described, the combination of a blank receptacle comprising a bottom plate, a feed roll mounted therein in close proximity to the front edge of said bottom plate, and adjustable means for supporting the blanks in edgewise position on said bottom plate, said means com prising a back plate, means for advancing said back plate towards said feed roll, pivoted arms rigid parts of which are adapted to contact with the front side of said back plate or with the blanks supported thereby, means for turning said arms pivotally, comprising segmental gears on said arms concentric with their pivots and pinions which engage said segmental gears and means for securing said arms in different pivotal adjustments, comprising friction disks and means for drawing the same into frictional engagement with said pivoted arms, substantially as described.

22. In a device of the type described, the combination of a blank receptacle comprising a bottom plate, a feed roll mounted therein in close proximity to the front edge of said bottom plate, and adjustable means for supporting the blanks in edgewise position on said bottom plate, said means comprising a back plate, means for advancing

said back plate towards said feed roll, laterally adjustable guides supported on said bottom plate, arms pivoted to said guides, means for securing said arms in different pivotal adjustments, and projections on said arms adapted to contact with the front side of said back plate or with the blanks supported thereby, substantially as described.

23. In a device of the type described, the combination of a blank receptacle, comprising a pivoted bottom plate, a feed roll mounted therein in close proximity to the front edge of said bottom plate, means for securing said bottom plate in different pivotal adjustments, and adjustable means for supporting the blanks in edgewise position on said bottom plate, said means comprising a back plate, means for advancing said back plate towards said feed roll, and adjustable stops adapted to contact with the front side of said back plate or with the blanks supported thereby, substantially as described.

24. In a device of the type described, the combination of a blank receptacle comprising a pivoted bottom plate, a feed roll mounted therein in close proximity to the front edge of said bottom plate, and adjustable means for supporting the blanks in edgewise position on said bottom plate, said means comprising a back plate, means for advancing said back plate towards said feed roll, laterally adjustable guides supported on said bottom plate, arms pivoted to said guides, means for securing said arms in different pivotal adjustments, and projections on said arms adapted to contact with the front side of said back plate or with the blanks supported thereby, substantially as described.

25. In a device of the type described, the combination of a blank receptacle, comprising a bottom plate, a feed roll mounted therein in close proximity to the front edge of said bottom plate, and means for supporting the blanks in edgewise position on said bottom plate and for advancing the same yieldingly towards said feed roll, said feed roll being spirally grooved, and pins secured in said feed roll and which project into the grooves formed therein, the points of said pins terminating in such relation to the surface of the feed roll that compression of said feed roll by contact with the blanks will cause said pins to protrude slightly and engage said blanks, substantially as described.

26. In a device of the type described, the combination of a blank receptacle, comprising a bottom plate, a feed roll mounted therein in close proximity to the front edge of said bottom plate, and means for supporting the blanks in edgewise position on said bottom plate and for advancing the same yieldingly towards said feed roll, said feed roll being spirally grooved, and pins secured in said feed roll and which project into the grooves formed therein, the points of said pins terminating substantially flush with the surface of said feed roll, substantially as described.

27. In a device of the type described, the combination of a blank receptacle, comprising a bottom plate, a feed roll mounted therein in close proximity to the front edge of said bottom plate, and means for supporting the blanks in edgewise position on said bottom plate and for advancing the same yieldingly towards said feed roll, said feed roll consisting of spaced, spirally grooved sections, and pins secured in said feed roll and which project into the groove formed therein, substantially as described.

28. In a device of the type described, the combination of a blank receptacle, comprising a bottom plate, a feed roll mounted therein in close proximity to the front edge of said bottom plate, and means for supporting the blanks in edgewise position on said bottom plate and for advancing the same yieldingly towards said feed roll, said feed roll consisting of spaced, spirally grooved sections, and comprising sections which are oppositely grooved, and pins secured in said feed roll and which project into the grooves formed therein, substantially as described.

29. A feed roll for a device of the type described, said roll being yielding and being spirally grooved, and pins secured in said roll and which project into the grooves formed therein, the points of said pins terminating in such relation to the surface of said feed roll that compression of said roll adjacent to said pins will cause said pins to protrude slightly, substantially as described.

30. A feed roll for a device of the type described, said feed roll being yielding and consisting of spaced, spirally grooved sections, and pins secured in said sections and which project into the grooves formed therein, the points of said pins terminating in such relation to the surface of said feed roll that compression of said roll adjacent to said pins will cause said pins to protrude slightly, substantially as described.

31. A feed roll for a device of the type described, said feed roll being yielding and consisting of spaced, spirally grooved sections, and comprising sections which are oppositely grooved, and pins secured in the sections of said feed roll and which project into the grooves formed therein, the points of said pins terminating in such relation to the surface of said feed roll that compression of said roll adjacent to said pins will cause said pins to protrude slightly, substantially as described.

32. A device of the type described and means for mounting said device directly upon the frame of the platen carriage of a

typewriter or other machine, said means comprising brackets secured to opposite sides of said platen carriage frame provided with seats at their upper ends on which parts of said magazine are adapted to rest, and headed studs secured in said brackets adapted to engage corresponding key-hole slots formed in said magazine, substantially as described.

33. A device of the type described comprising a fixed bottom plate, and means for mounting said device directly upon the frame of the platen carriage of a typewriter or other machine, said means comprising brackets secured to opposite sides of said platen carriage frame provided with seats on which the fixed bottom of said magazine is adapted to rest, and headed studs secured in said brackets and which project from the magazine seats thereon and are adapted to engage key-hole slots formed in the fixed bottom of said magazine, substantially as described.

In testimony that I claim the foregoing as my invention, I affix my signature this 23 day of August, 1915.

WILLIAM WARD DAVIDSON.