ABSTRACT

The invention relates to a display instrument (1, 1') having a pointer (H, H') rotatably disposed about a pointer axis (2, 2'), having a pointer coupling part (74, 74') and a pointer head (70, 70') and at least one pointer segment (71 to 72) disposed between same. According to the invention, at least one of the pointer segments (71 to 72) is retained in a main structure (6, 6') between the pointer coupling part (74, 74') and the pointer head (70, 70').

FIGURE 2

WE CLAIM:

1. An indicating instrument (1, 1') with a pointer (H, H') that is rotatably arranged about a pointer axle (2, 2') and has a pointer coupling part (74, 74') and a pointer vane (70, 70') and at least one pointer sections (71 to 72) arranged therebetween, characterized in that, between the pointer coupling part (74, 74') and the pointer vane (70, 70'), at least one of the pointer sections (71 to 72), more particularly the pointer section (72) adjoining the pointer coupling part (74, 74'), is held in a base structure (6, 6') that is formed by a kite, wherein, in the viewing direction of the indicating instrument (1, 1'), a stepper motor (4, 4') is arranged in front of the base structure (6, 6') and wherein, in the viewing direction, a printed-circuit board (3, 3') is arranged in front of the stepper motor (4, 4').

2. The indicating instrument (1, 1') as claimed in claim 1, characterized in that the base structure (6, 6') is formed as a base frame (G, G'), which stiffens the at least one pointer section (72) on both sides along the longitudinal extent thereof.

3. The indicating instrument (1, 1') as claimed in claim 1 or 2, characterized in that the pointer (H, H') is embodied as an optical waveguide, wherein at least the region of the pointer (H, H') close to the coupling is held by the base structure (6, 6') in a bearing manner.

4. The indicating instrument (1, 1') as claimed in one of claims 2 or 3, characterized in that the longitudinal axis of the at least one pointer section (72) forms an axis of symmetry of the base frame (G, G').

5. The indicating instrument (1, 1') as claimed in one of claims 2 to 4, characterized in that a transverse web (62, 62') runs along the diagonal of the base frame (G, G') that runs perpendicular to the pointer section (72).

6. The indicating instrument (1, 1') as claimed in claim 5, characterized in that the pointer coupling part (74, 74') is arranged penetrating the transverse web (62, 62') and projecting perpendicularly therefrom.

7. The indicating instrument (1, 1') as claimed in one of the preceding claims, characterized in that the pointer coupling part (74, 74') can be plugged into a connector part of a stepper motor (4, 4') or can be plugged onto a drive shaft of a stepper motor (4, 4').

Dated this 17th day of April, 2012

Aparna Kareer

Of Obhan & Associates

Agent for the Applicant

Patent Agent No. 1359

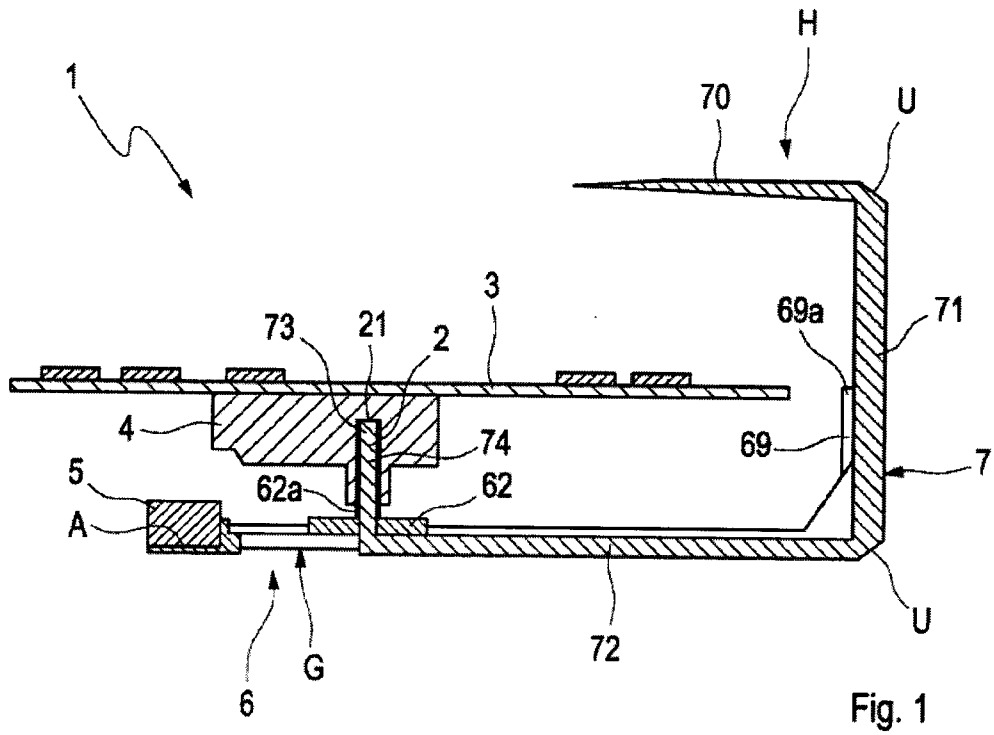

Fig. 1

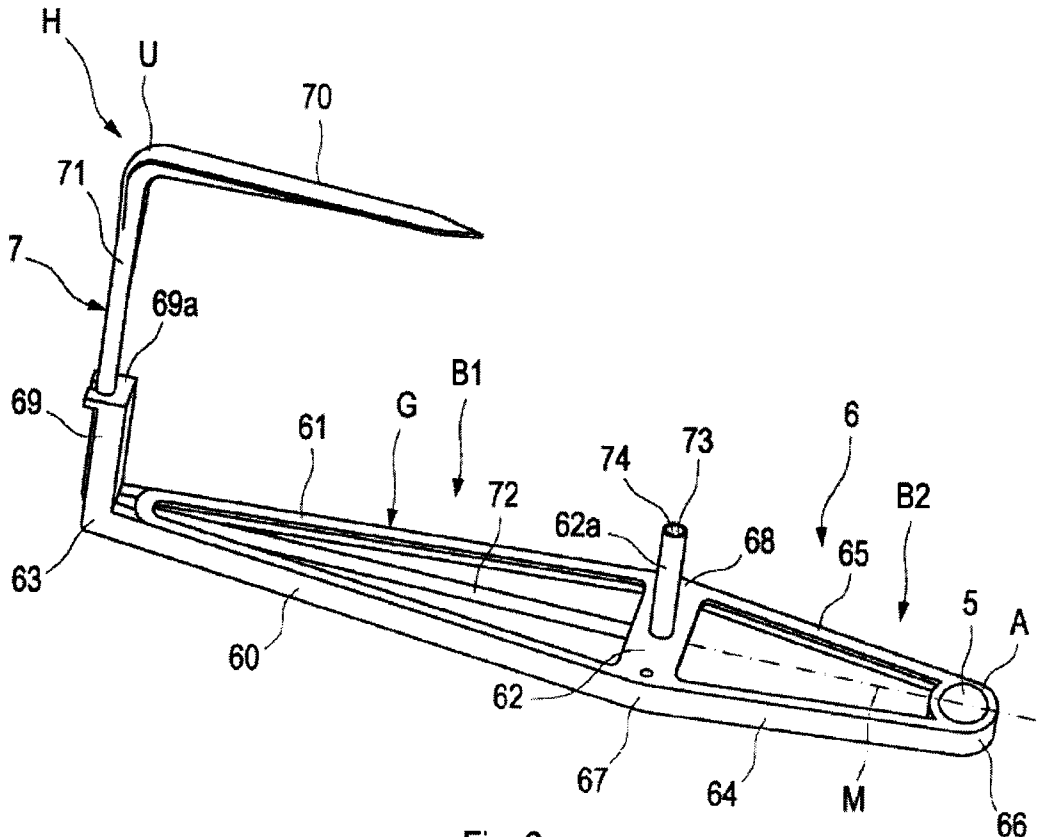

Fig. 2

OBHAN & ASSOCIATES
AGENT FOR THE APPLICANTS

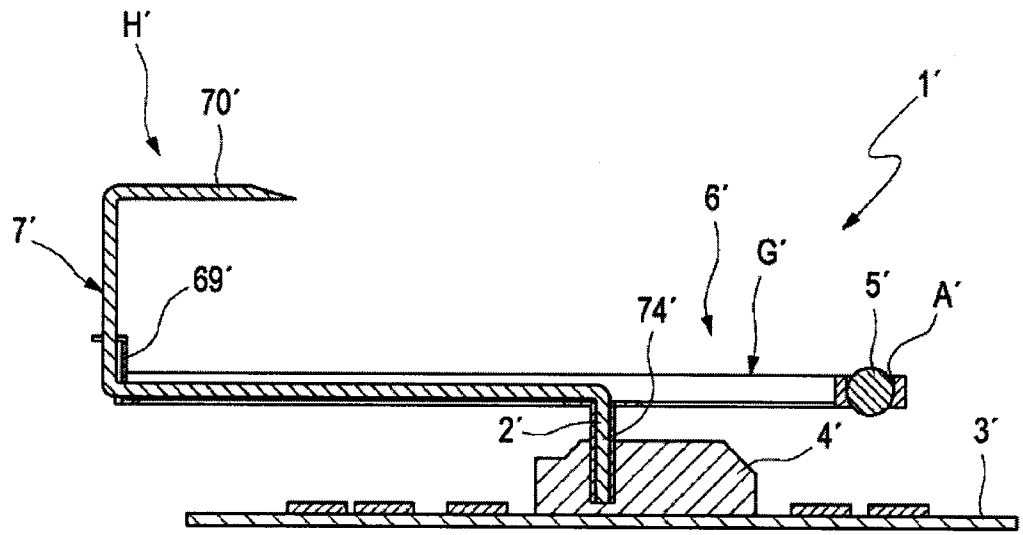

Fig. 3

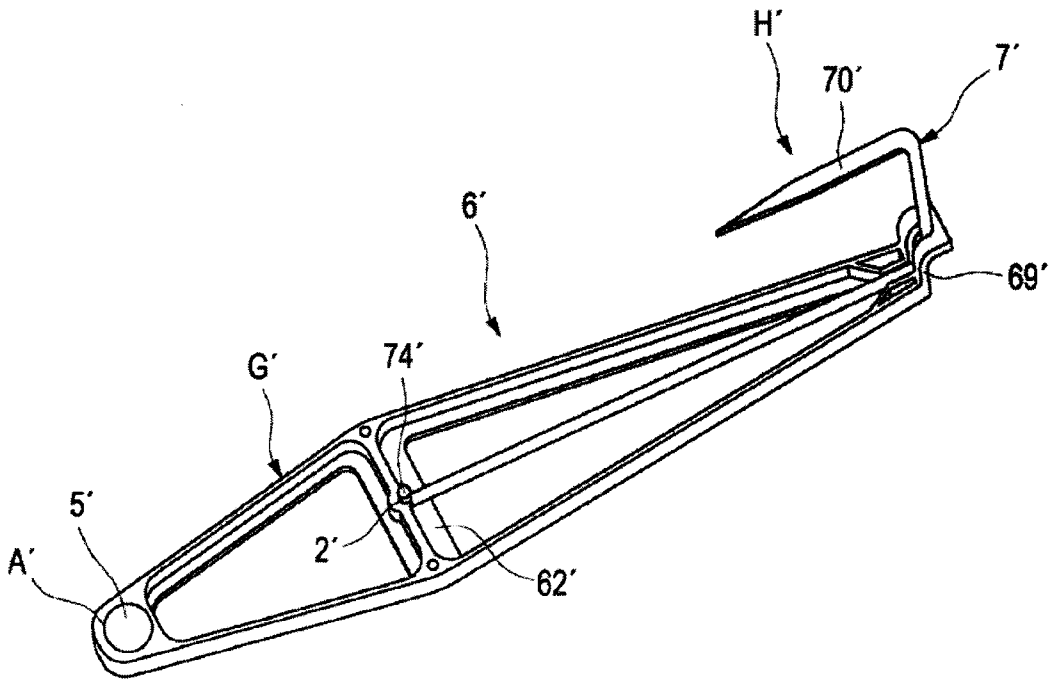

Fig. 4

OBHAN & ASSOCIATES
AGENT FOR THE APPLICANTS