May 8, 1956 R. ENZMANN ET AL 2,744,492

ROLLER SPEED INDICATING MEANS FOR PAPER COATING MACHINES

Filed Feb. 8, 1954 2 Sheets-Sheet 1

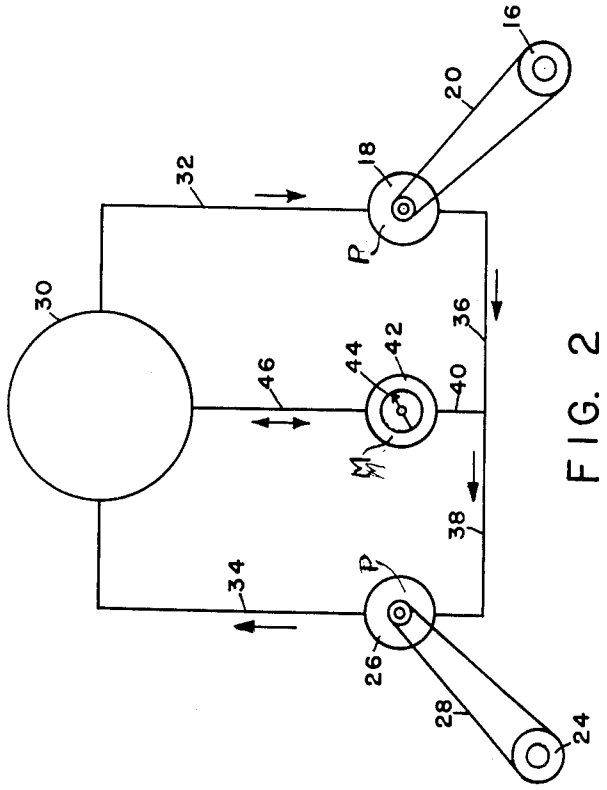

FIG. 2

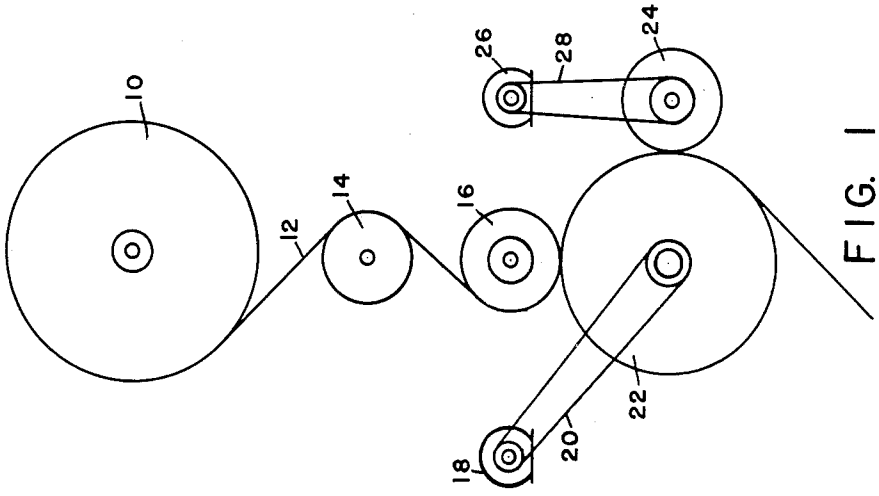

FIG. 1

INVENTOR.
WILLIAM H. BARRETT
RALPH ENZMANN

BY H F Woodward atty

May 8, 1956 R. ENZMANN ET AL 2,744,492

ROLLER SPEED INDICATING MEANS FOR PAPER COATING MACHINES

Filed Feb. 8, 1954 2 Sheets-Sheet 2

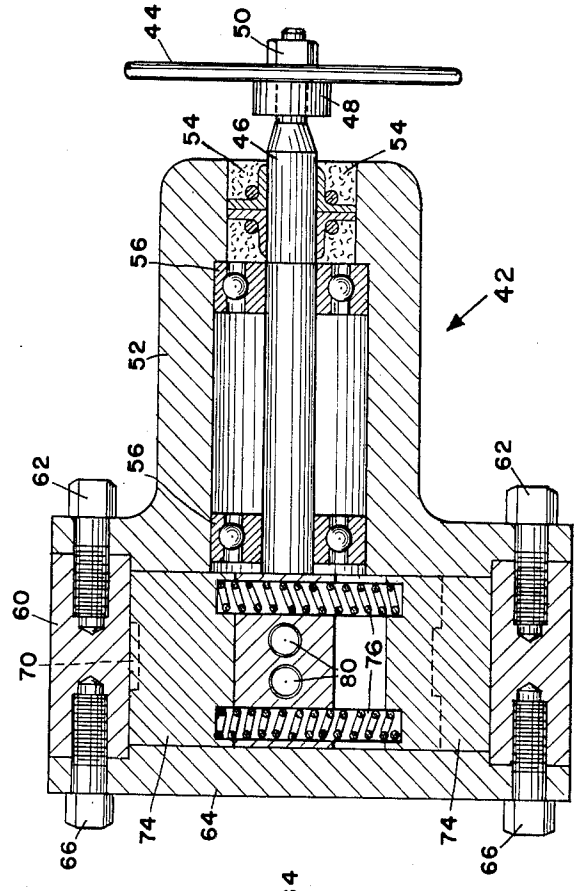

FIG. 4

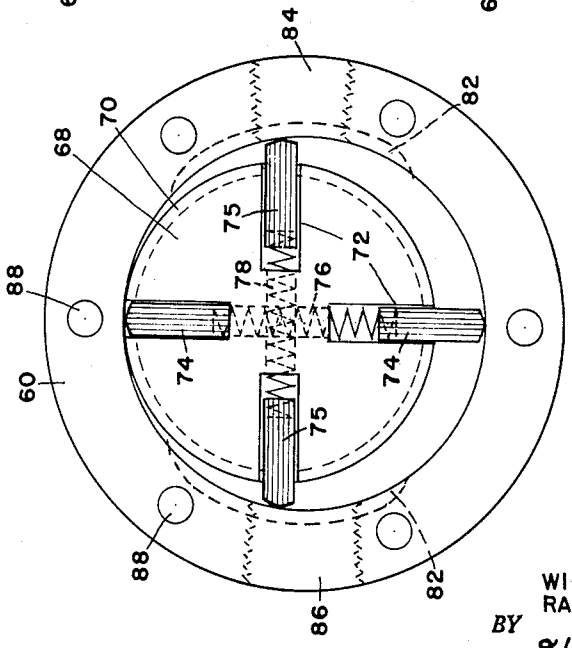

FIG. 3

INVENTOR.
WILLIAM H. BARRETT
RALPH ENZMANN

BY
H. F. Woodward
Atty

United States Patent Office 2,744,492 Patented May 8, 1956

2,744,492

ROLLER SPEED INDICATING MEANS FOR PAPER COATING MACHINES

Ralph Enzmann and William H. Barrett, International Falls, Minn., assignor to Minnesota and Ontario Paper Company, Minneapolis, Minn.

Application February 8, 1954, Serial No. 408,765

5 Claims. (Cl. 118—10)

This invention relates to new and useful improvements in apparatus and process for applying films to paper and more particularly to applying coating to a continuous moving web of paper.

This invention particularly concerns a coating apparatus in which the character of the film can be predetermined and known during the application thereof.

The base stock to which the coating is to be applied may be of any suitable kind, and the ingredients contained in the coating applied thereto may be chosen from a number of different materials. The coating mixture may include clay, calcium carbonate, satin white, titanium dioxide, etc., and the adhesive or binder, such as starch, protein, glue or other suitable material all contained in an active dispersion.

It is an object of this invention to apply a coating upon a fast traveling web of paper and the term "paper" as used herein is intended to include any and all material in web form whereon a film may be applied and no distinction is intended by various grades such as, for example, printing, photography or other papers or paper board.

Other and further objects of the invention and the advantages of the same will be pointed out hereinafter and indicated in the appended claims or will be obvious to one skilled in the art upon understanding the present disclosure.

For the purpose of this application there has been elected to set forth one particular structure and one particular method of producing the same and it is to be understood that they are here presented for illustrative purposes only and are not to be accorded any interpretation such as might have the effect of limiting what is claimed as the invention short of its true and comprehensive scope in the art.

In the drawings which illustrate an embodiment of the invention:

Figure 1 is a view of a schematic arrangement of a coating apparatus;

Figure 2 is a schematic arrangement of a synchroscope or indicator;

Figure 3 is a sectional view through the indicating device shown in Figure 4; and

Figure 4 is a sectional view of the indicating device.

It is to be understood that the invention may be used with various types of coating apparatus and is particularly adapted to be used with a type of coating or apparatus shown in Patent No. 2,513,394 dated July 4, 1950.

Referring to the drawings in detail, **10** indicates a reel of paper and **12** the web being unwound therefrom. The web passes over guide roll **14** and then over a backing roll **22**. The web **12** is held in close contact with the backing roll by pinch roll **16**. While the paper is supported by the backing roll the coating is applied by applicator roll **24**. The paper after receiving the film passes to suitable drier (not shown). The backing roll **22**, paper reel **10** and the drier section (not shown) may be driven by variable speed D. C. motors (not shown) and may be controlled from a panel adjacent the coating apparatus. The coating section, including the applicator roll **24**, may be driven by a D. C. motor and variable speeds are achieved by hydraulic adjustment of a Reeves variable speed transmission (not shown). Normally, an indicating electrical tachometer is attached to the coating section and shows the surface speed of the coating applicator roll **24**. Another indicator tachometer is usually attached to the drier section and shows the speed of the paper passing through the machine. When a paper is to be coated, the operator adjusts the variable speed transmission, such as a Reeves, on the applicator roll to the predetermined speed. The web of paper is then brought up to the desired speed and when the paper reaches the speed desired, for example the speed of the surface velocity of the applicator roll, the applicator roll is brought into contact with the moving web of paper.

Due to variables, such as mechanical and human, the method just described seldom achieves synchronism between the velocity of the web and the peripheral velocity of the paper coating roll. By controlling the speed of the applicator roll in reference to speed of the paper, different results can be obtained in the film applied. The paper web may be driven faster than the applicator roll, the applicator roll may be driven faster than the web of paper or the applicator roll and the web of paper are driven in synchronism. Each of these conditions provides different types of film upon the moving web of paper. Normally, it is impossible to tell which one of these conditions exists and the use of the present invention provides means for indicating what condition actually exists during the application of the film.

In Figure 2 of the drawings is shown one means of indicating the relationship of the speed of the paper and the applicator roll. This arrangement includes container or sump **30**, pumps **18** and **26**, and reversible motor **42** carrying indicator **44**. The sump **30** is suitably connected to the pumps **18** and **26** by conduits **32** and **34**. These conduits **32** and **34** are of suitably equal length and equal resistance to the flow of fluid therethrough. The pumps **18** and **26** communicate with each other through conduits **36** and **38** and these conduits are of equal length and equal resistance to the flow of fluid. The sump **30** is connected to a reversible fluid motor and the motor is turned in connection to the conduits **36** and **38** by conduits **46** and **40** respectively.

The reversible fluid motor **42** is shown in detail in Figures 3 and 4. The shaft **46** and the rotor **68** are preferably made in one piece but it is to be understood that they may be made separately and suitably connected together. The rotor **68** is provided with a groove **70** extending therearound and also provided with spaced openings **72**. In these openings **72** are slideably mounted blades **74** and **75**. The blades **75** are forced outwardly by a pair of springs **78** while blades **74** are forced outwardly by a pair of springs **76**. The blades **74** and **75** have openings in one end thereof as shown in Figure 4 at **80** into which the springs are seated. The conduits **40** and **46** are connected to the fluid motor at **84** and **86**. The stator of the motor **42** is provided with channels **82**. These channels are located adjacent the inlet and outlet of the motor and extend beyond each side of such inlet and outlet. The rotor **68** is cylindrical and is mounted in the stator of housing **60** as shown in Figure 3. The fluid motor **42** includes housing **60** through which shaft **46** extends. On the outward end of shaft **46** is mounted the indicator member **44** which is held in place by members **48** and **50**. The shaft is supported in the housing by suitable bearings **56** and one end of the housing is closed by packing **54**. The housing for the rotor **68** is connected to the member **52** and has suitably threaded screw members **62**. The other end of the housing is

closed by plate member 64 and held in place by suitable members 66.

In operation if the backing roll and the applicator roll are traveling at the identical surface speed the pumps 18 and 26 are rotated at identical speeds and all the fluid, such as oil from the pumps 18, will pass through pump 26 and back to the sump. If the pump 18 is traveling faster than pump 26 the excess of oil from pump 18 will pass through the reversible motor 42 causing the indicator 44 to turn clockwise. If pump 26 is rotated faster than pump 18 the excess oil will be drawn through the fluid motor causing the rotor to turn counter-clockwise.

It is preferred that the pumps 18 and 26 be positive displacement pumps and they may be connected to the applicator roll and the backing roll. With suitable gear trains from the applicator roll and the backing roll, the pumps 18 and 26 will be driven at synchronous speeds if the peripheral velocity of the applicator roll and the backing roll are identical. The proper gear ratio may be determined as follows:

The ratio from the backing roll to pump 18 would be the gear diameter of the backing roll divided by the diameter of the applicator roll. The ratio from the applicator roll to pump 26 would be constant. A large constant gives higher pump speed and hence greater sensitivity to the indicator 44. The above formula applied to a coater, if it is operated at 800 feet per minute, gives the following results where the diameter of the backing roll is 2.08 feet and the applicator roll is 1 foot:

$$\text{R. P. M. packing roll}=\frac{800}{2.08\times 3.14}=122.5$$

$$\text{R. P. M. applicator roll}=\frac{800}{1\times 3.14}=255$$

If we let the constant equal 3, the pumps 18 and 26 will operate at about the speed desired for good sensitivity at 800 feet per minute coating speed. The speed of the pump 18 will be

$$122.5\times\frac{2.08}{1}\times 3=765$$

and the speed of the pump 26 is equal to $255\times 3=765$. The gear ratio between the backing roll and the pump 18 should be

$$\frac{2.08}{1}\times 3 \text{ to } 1=6.24 \text{ to } 1$$

and the ratio from the applicator roll to the pump 26 should be equal to 3 to 1. By way of example the 3 to 1 speed ratio to pump 26 can be achieved by use of a 15 tooth and a 45 tooth sprocket.

If the pumps 18 and 26 are connected to rolls of the same size, both pumps should be driven by identical sprocket drives or the like.

What is claimed:

1. The combination of a paper coating apparatus including a film applying roll and a paper supporting roll, of means for indicating the speed relationship of the film applying roll and the paper supporting roll, said means comprising fluid pumps driven by the film applying roll and the paper supporting roll, a liquid container, conduits connecting the container and the pumps in series so that fluid from the container can flow through the pumps and back to the container, a conduit connecting the liquid container to the conduit connecting the pumps, a fluid motor mounted in the conduit connecting the container and the conduit connecting the pumps, said fluid motor having a shaft, an indicator carried by the shaft to indicate the speed relationship between the said rolls.

2. The combination of a high speed paper coater including an applicator roll and a backing roll, of means for indicating the speed relationship between said rolls, said means comprising a fluid pump driven by each roll, a container for fluid, said container and pumps connected in a series so that fluid from the container can flow through the pumps and back to the container, a fluid motor connecting the fluid container and the conduit extending between the pumps, a fluid motor having a casing mounted in fluid motor conduit, said fluid motor having a shaft, an indicator carried by the shaft, said fluid motor provided with a rotor having spring pressed segments mounted therein, said rotor is eccentrically mounted with respect to the fluid motor casing.

3. The combination of a paper coating device including the coating applying roll and a paper supporting roll, of means for indicating the speed relationship between the two said rolls, said means comprising a pump driven by each of said rolls, a fluid container, conduits of substantially equal size and length connecting the pumps to the container, a third conduit connecting the pumps, a fourth conduit connecting the fluid container and the third conduit, a fluid motor having a shaft mounted in the said fourth conduit, an indicator for showing speed relationship between the said rolls carried by the fluid motor shaft.

4. A combination with a film applying apparatus including the film applying roll and a web supporting roll, of means for indicating the speed relationship between the two rolls, said means comprising of a fluid pump driven by each roll, a fluid container, conduits for connecting the container to each pump, said conduits of substantially the same resistance to the flow of fluid therethrough, a conduit connecting the two pumps, a fluid motor conduit connecting the container and the conduit connecting the two pumps, a fluid motor having a shaft mounted in the fluid motor conduit, and an indicator carried by the motor shaft for indicating the speed relationship.

5. The combination of a high speed paper coater including an applicator roll and a paper supporting roll, of means for indicating the speed relationship between the said rolls, said means comprising a pump connected to each roll, a fluid container, conduits of substantially equal size and length connecting the container and the pumps, a third conduit connecting the pumps, a fourth conduit connecting the third conduit to the fluid container, a fluid motor having a shaft mounted in said fourth conduit, and an indicator carried by said shaft.

References Cited in the file of this patent

UNITED STATES PATENTS

1,545,638	Clay	July 14, 1925
1,785,370	Thomas	Dec. 16, 1930
1,970,368	Fishburn	Aug. 14, 1934
2,080,575	Perry	May 18, 1937
2,248,504	Kenny	July 8, 1941
2,280,203	Toulmin	Apr. 21, 1942
2,419,070	Grunke et al.	Apr. 15, 1947