April 7, 1936. H. S. PHELPS 2,036,435

AUXILIARY DRIVING LIGHT

Filed May 8, 1933

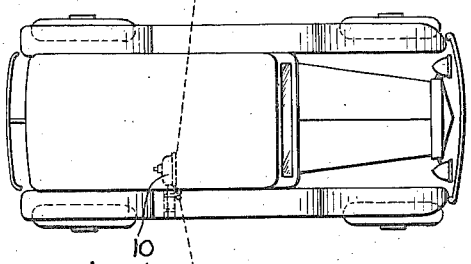

Fig. 1.

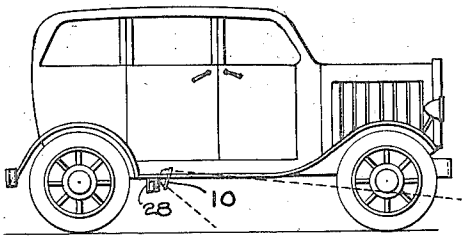

Fig. 2.

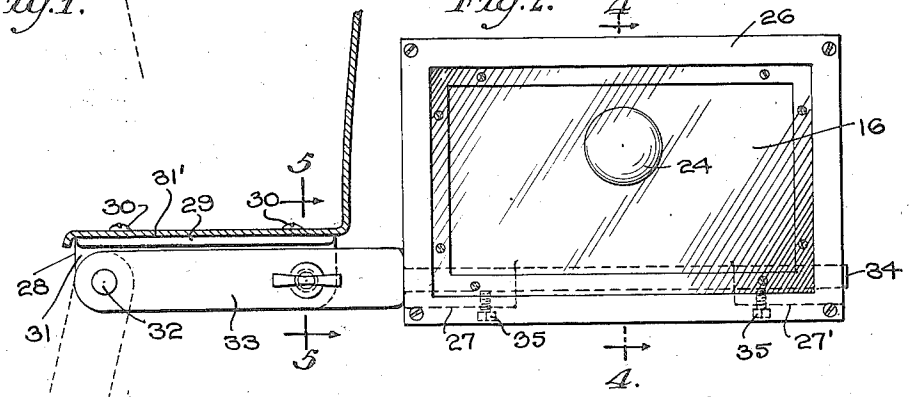

Fig. 3.

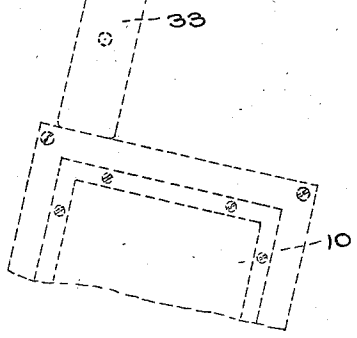

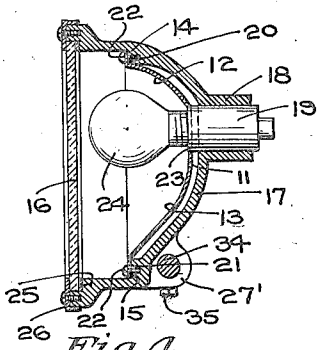

Fig. 4.

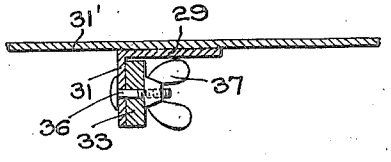

Fig. 5.

Inventor
HOWARD S. PHELPS
By Learkelsar
Attorney.

Patented Apr. 7, 1936

2,036,435

UNITED STATES PATENT OFFICE

2,036,435

AUXILIARY DRIVING LIGHT

Howard S. Phelps, South Ardmore, Pa.

Application May 8, 1933, Serial No. 669,904

2 Claims. (Cl. 240—7.1)

This invention relates generally to highway lighting equipment for vehicles and the like and more particularly to improvements in the construction and arrangement of an auxiliary driving light which is adapted to provide increased intensity of illumination of the highway to a substantial distance in advance and to either side of the vehicle equipped therewith.

It is a recognized fact that the surface of the highway immediately in advance of the vehicle is so barely illuminated by the usual vehicle headlights that surface irregularities of the highway as well as objects thereon, while visible at a distance, seemingly disappear as the vehicle approaches the same. It is because of this unpleasant sensation that the night driver generally experiences a feeling of relief upon the approach from the rear of a car using bright driving lights. On such occasions, the light from the rear affords an increased intensity of illumination not only in the normally dark zone immediately in advance of the vehicle in front but also to either side thereof whereby the margins of the traveled highway, particularly at curves, are more readily discernible.

It is among the objects of the present invention to overcome and obviate the above mentioned difficulties by the provision of an improved driving light, which is auxiliary to and so adapted for use in conjunction with the main head lamps of the vehicle that the intensity of illumination of the highway is increased over the entire area extending a substantial distance in advance of the vehicle and to either side thereof, this increased illumination being obtained without any attending glare. In other words, by means of the present invention there is provided substantially the same character of highway illumination which has heretofore been obtained only upon approach from the rear of a car using bright driving lights.

A further object of the invention is to provide an automotive lighting unit which is capable of producing a beam of light which is generally of horizontally attenuated form, that is, it is relatively narrow in the vertical direction and relatively broad in the horizontal direction.

Still another object is to so mount the auxiliary lighting unit upon the vehicle that the beam of light which emanates therefrom increases the intensity of illumination of the highway to either side of and in advance of the vehicle without at the same time introducing a condition of glare which might prove hazardous to the driver of an approaching vehicle.

A still further object of the invention is the provision of a lighting unit as aforesaid which is readily adapted for mounting upon the chassis or undercarriage of the vehicle without necessitating any changes in the construction of the latter; which is readily removed for purposes of maintenance, inspection and repair; and which is relatively inexpensive to manufacture and install, although durable and efficient in operation.

Other objects of the invention and advantages resulting from the use thereof will appear more fully hereinafter.

The invention consists substantially in the combination, construction, location and relative arrangement of parts, all as will appear more fully hereinafter, as is shown in the accompanying drawing, and as is finally pointed out in the appended claims.

In the said accompany drawing:—

Figure 1 is a plan view of a vehicle equipped with the auxiliary lighting unit of the present invention;

Figure 2 is a side elevational view thereof;

Figure 3 is a front elevational view of the lighting unit per se showing the character of its mounting upon the running board of the vehicle;

Figure 4 is a vertical sectional view of the lighting unit taken on the line 4—4 of Figure 3; and

Figure 5 is a sectional view of the mounting connection taken on the line 5—5 of Figure 3.

Referring now to the drawing and more particularly to Figures 3 and 4 thereof it will be observed that the lighting unit, which is designated generally by the reference numeral 10, is provided with a substantially trough-shaped reflector 11 which, in vertical section, is of substantially circular form in its upper section 12 and of substantially parabolic form in its lower section 13. In its longitudinal direction, the surface of the reflector at every point thereof is substantially rectilinear. There is thus provided a reflector the free upper and lower edges 14 and 15 of which are not only straight from side to side but which also lie in a plane substantially in parallelism with the plane of the front lens 16.

The reflector 11 is suitably housed within a correspondingly shaped casing 17 in the rear wall of which is provided a rearwardly projecting integrally formed tubular boss 18 into which is slidably seated the lamp socket 19, any suitable means (not shown) being provided for maintaining the lamp socket in its properly ad-

justed position. Formed within the top and bottom walls of the casing 17 are longitudinally extending shoulders or seats 20 and 21 for respectively accommodating the oppositely turned frontal edges 14 and 15 of the reflector, these reflector edges being respectively secured in position against the shoulders 20 and 21 by screws 22 or other suitable securing means. The reflector 11 is, of course, provided with an opening 23 therein which is adapted for registry with the tubular boss 18 and through which opening the forward end of the lamp socket 19 may be projected to the extent desired. The lamp socket 19 is so arranged with relation to the reflector that when the lamp 24 is so inserted within the socket, the lamp lies in closer proximity to the cylindrical surface 12 of the reflector than to the parabolic surface 13 thereof.

The frontal edge of the lamp casing 17 is provided with a perimetrally extending seat or shoulder 25 within which is adapted to be received the front lens 16, the latter being preferably formed of glass and secured in position by a suitable lens retaining member 26. Formed upon the rear surface of the lamp casing 17 and adjacent the bottom thereof are a pair of longitudinally spaced bosses 27 and 27' which are suitably bored to permit the free passage therethrough of a supporting member to be presently described.

The lighting unit of the design and construction above described is adapted to project a beam of light which is many times broader than it is deep. In other words, when such lighting unit is so mounted that the front lens thereof assumes a vertical or nearly vertical position, the light rays are projected forwardly from the reflector in the form of a horizontally attenuated beam. Furthermore, due to the cylindrical-parabolic surface of the reflector, all of the light rays which are reflected therefrom are so projected forwardly of the reflector that none of them intersect the plane which is tangential to the upper rectilinear edge of the reflector. It will be apparent, therefore, that when the unit is so mounted in position that the front lens is in a substantially vertical position or is so inclined with respect to the vertical that its upper edge is in advance of the bottom edge thereof the light rays which emanate from the reflector will be uniformly projected forwardly and downwardly, never upwardly. Accordingly, by mounting this lighting unit upon the vehicle at an elevation immediately above the ground and well to the rear of the forward end of the vehicle, a maximum degree of highway illumination is obtained in advance and to either side of the vehicle without any such attending glare as would be hazardous to the driver of an approaching vehicle.

As is most clearly shown in Figures 1 and 2, the lighting unit 10 having the above described characteristics is preferably mounted beneath the body of the vehicle at a point located on a transverse line lying to the rear of the driver's seat. In order to so locate the auxiliary highway lighting unit in position, there is preferably employed a mounting bracket 28 of generally right-angle form, the branch 29 thereof being secured, as by the screws 30, to the under surface of the vehicle running board 31'. Pivotally secured to the depending branch 31 of the bracket 28, as by a pin 32, is an arm 33 which is adapted to be swung inwardly of the body into the full line position shown in Figure 3. The outer section of the arm 33 is substantially flat so as to adapt it to be secured flatwise against the depending branch 31 of the supporting bracket, the freely projecting inner section 34 of the arm being, however, of circular cross section. This rod-like extremity 34 of the arm 33 is adapted for projection through the apertured bosses 27 and 27' of the lamp casing 17, the latter being adjustably secured to the supporting rod 34 by means of set screws 35 or the like.

As appears most clearly in Figure 3, the supporting arm 33 for the lighting unit is secured in its normally horizontal position beneath the running board of the vehicle by means of a bolt 36 having a wing nut 37, the bolt 36 being projected commonly through registering openings provided in the depending branch 31 of the bracket and the flat section of the arm 33. Should it be desired to inspect, repair or otherwise service the lighting unit, it is merely necessairy to remove the bolt 36 whereupon the unit is capable of being swung downwardly and outwardly of the vehicle body about the pivot pin 32. Also, by loosening the set screws 35, the lighting unit 10 is capable of being bodily adjusted angularly with respect to its supporting rod 34 so as to present the same at any desired angle with respect to the vertical. Experience has shown that the most efficient operation of the unit is obtained when it is positioned as shown in Figure 2, that is, with the upper edge of the reflector slightly in advance of the bottom edge thereof.

By the use of a lighting unit of the character above described and which is mounted beneath the vehicle body at a point located somewhat to the rear of the driver's seat there is obtained a broad beam of light which is projected to a distance of 75 or 100 feet in advance of the car, thus eliminating that normally dark zone within which surface irregularities of the highway as well as objects thereon are not ordinarily clearly visible to the driver of the vehicle. Not only is the area immediately in advance of the vehicle so illuminated but also the areas to either side of the vehicle are illuminated, this being due to the broad character of the reflected beam. The dispersion of the beam is such that both the right and left-hand margins of the highway are well illuminated from points to the rear of the driver's seat to points well in advance of the front end of the vehicle. This is of particular value to the drivers of approaching vehicles because the car so equipped with the auxiliary highway lighting unit is clearly silhouetted, whether stationary or moving. Also of particular advantage is the fact that the light which is produced by this auxiliary lighting unit assists the driver of the vehicle in detecting persons or objects in the margin of the highway, at the same time that it provides a wide illuminated zone which is of great assistance when it is necessary to turn the car about in a relatively narrow roadway or into a normally obscure intersection. Also of considerable value is the fact that this auxiliary light beam, by virtue of its depressed relation to the highway surface and its relatively broad sweep, minimizes to very great extent the undesirable light reflection which is ordinarily obtained when driving in rain, snow or fog. In addition, by illuminating the highway to either side of the vehicle persons alighting from the vehicle at night are enabled to step with safety upon the highway surface. The foregoing are but a few

of the many advantages resulting from the use of the highway lighting unit above described, all of which it is not deemed necessary to recount in order to afford a complete understanding of the present invention.

It will be understood, of course, that the invention as hereinbefore described is susceptible of various changes and modifications which may be made from time to time without departing from the general principles or real spirit thereof, as indicated by the appended claims.

What is claimed as new and useful is:—

1. Highway lighting equipment for automotive vehicles and the like, the combination with an automotive vehicle of a lighting unit supported beneath the body of the vehicle a short distance above the surface of the highway to be illuminated, said lighting unit being mounted at a point located within the side limits of the body and to the rear of the driver's seat and comprising a casing having a rectangular front opening, a reflector disposed within said casing and a lamp the light from which is adapted to be reflected by said reflector, said reflector being, in vertical section, of substantial circular form in its upper portion and of substantially parabolic form in its lower portion, and, in longitudinal section, substantially rectilinear, the upper longitudinal edge of the reflector being disposed adjacent and substantially parallel to the upper marginal edge of the casing front opening, the location of the lighting unit and the constructional characteristics of the latter being complementally such that a well-defined pattern of light of an area sufficient to completely encompass the marginal limits of the vehicle is cast upon the highway surface whereby the vehicle is constantly positioned within the outline of said pattern while the vehicle is stationary or in transit.

2. Highway lighting equipment for automotive vehicles and the like, the combination with an automotive vehicle of a lighting unit adapted to project a light beam which is many times broader than it is deep, means for supporting said lighting unit beneath the vehicle body at a point located within the side limits thereof and to the rear of the transverse line of the driver's seat whereby to project the said light beam upon the highway surface in the form of a well-defined light pattern of an area sufficient to completely encompass the marginal limits of the vehicle, the latter being thereby constantly positioned, while stationary or in transit, within the outline of said light pattern, means for angularly adjusting the lighting unit about a substantially horizontally disposed axis, and means for swingably supporting said unit upon the vehicle body, said supporting means being swingable from a position beneath the vehicle body to a point located without the side limits of the vehicle body whereby to afford ready access to the lighting unit as desired.

HOWARD S. PHELPS.