A. M. DE JEU.

CARBON ASSORTING DEVICE.

APPLICATION FILED JUNE 19, 1912. RENEWED NOV. 11, 1914.

1,123,703. Patented Jan. 5, 1915.

5 SHEETS—SHEET 1.

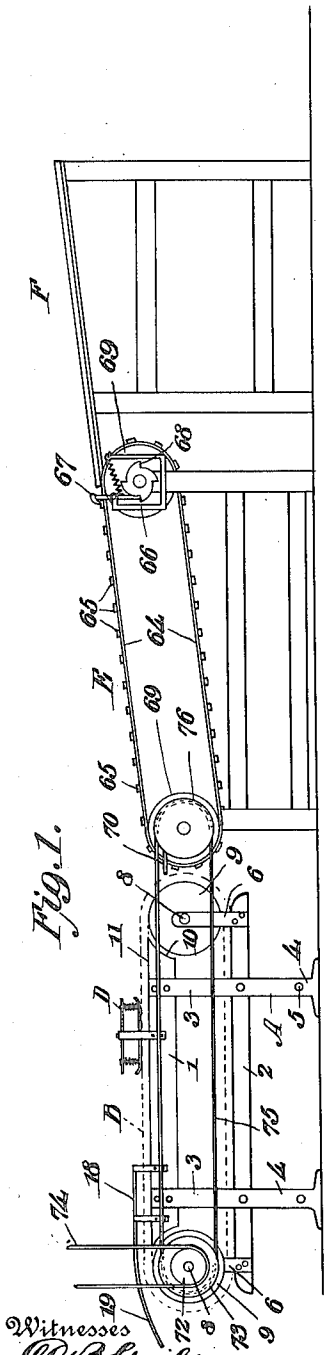

Fig. 1.

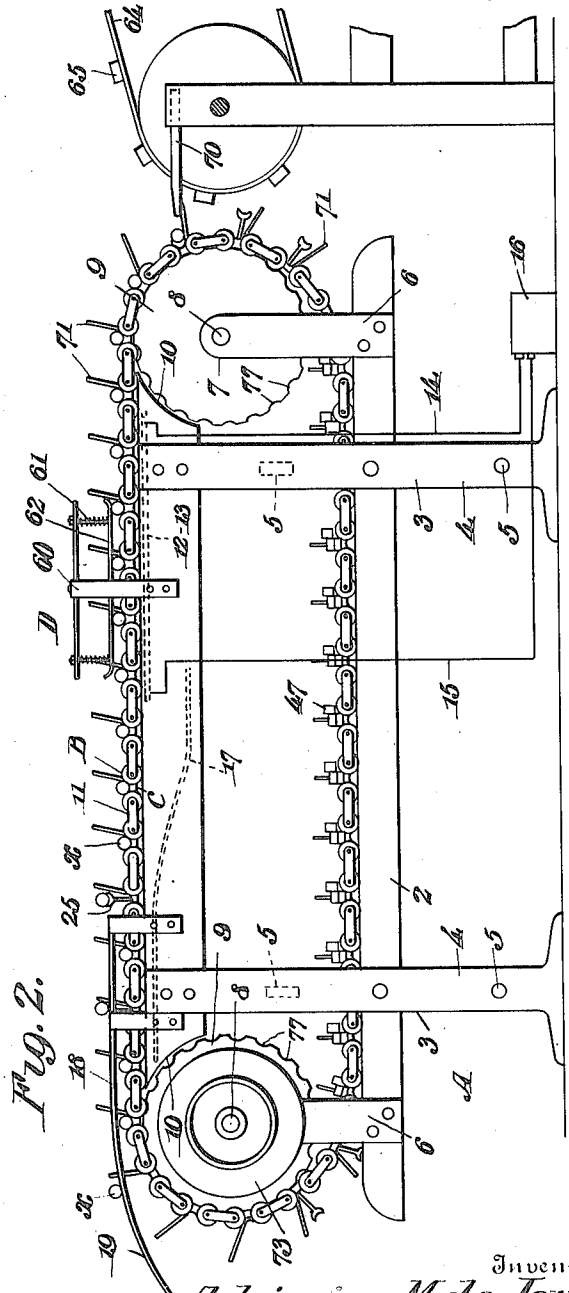

Fig. 2.

Witnesses

D. B. Galt.

H. S. Austin

Inventor

Adrianus M. de Jeu.

By Joshua R. H. Potts

Attorney

A. M. DE JEU.

CARBON ASSORTING DEVICE.

APPLICATION FILED JUNE 19, 1912. RENEWED NOV. 11, 1914.

1,123,703.

Patented Jan. 5, 1915.

5 SHEETS—SHEET 2.

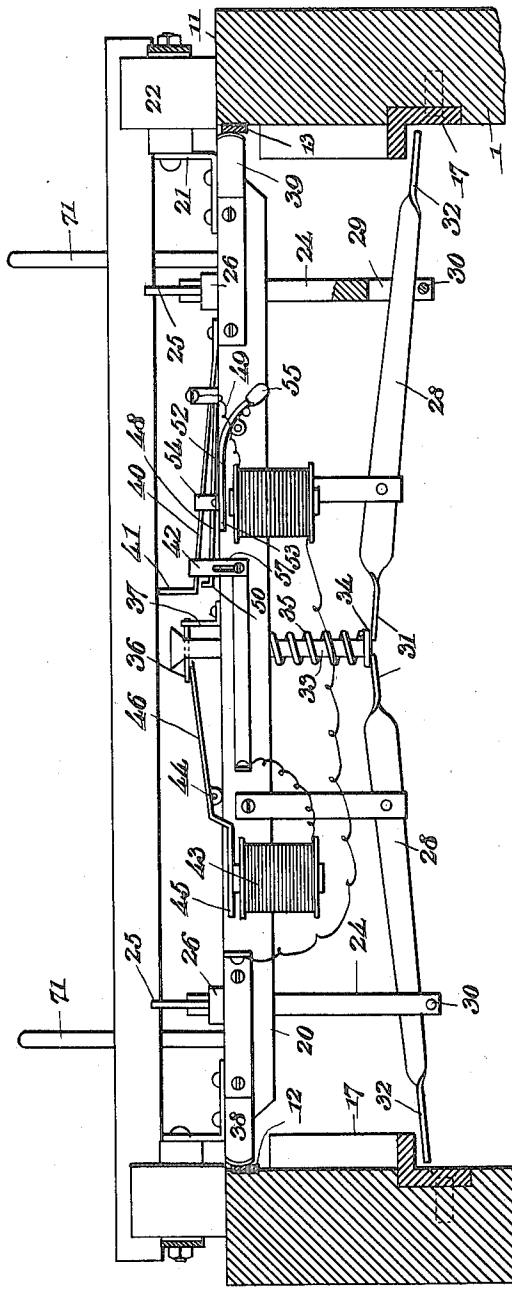

Fig. 3.

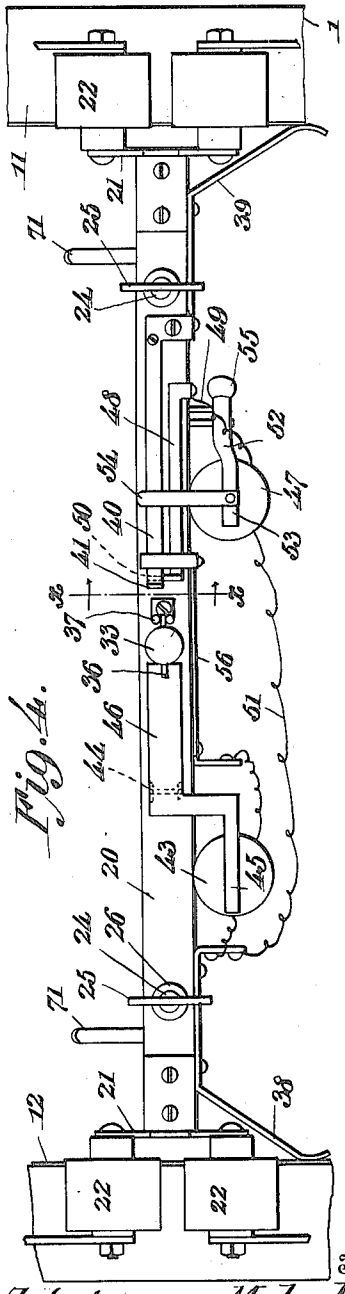

Fig. 4.

Witnesses

D. B. Galt.

H. S. Austin

Inventor

Adrianus M. de Jeu.

By Johnson & Johnson

Attorney

A. M. DE JEU.

CARBON ASSORTING DEVICE.

APPLICATION FILED JUNE 19, 1912. RENEWED NOV. 11, 1914.

1,123,703. Patented Jan. 5, 1915.

5 SHEETS—SHEET 3.

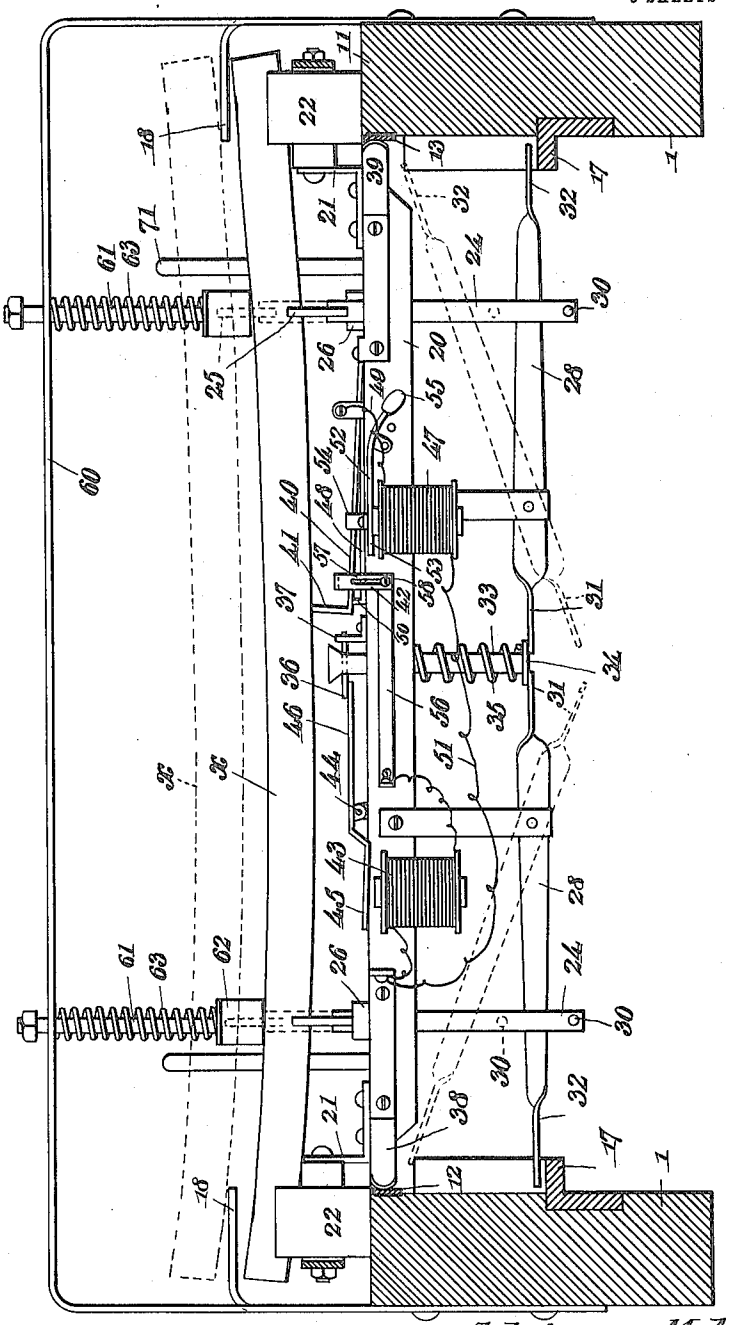

Fig. 5.

Witnesses

D. B. Galt.

H. S. Austin

Inventor

Adrianus M. de Jeu.

By Joshua R. H. Potts

Attorney

A. M. DE JEU.

CARBON ASSORTING DEVICE.

APPLICATION FILED JUNE 19, 1912. RENEWED NOV. 11, 1914.

1,123,703.

Patented Jan. 5, 1915.

6 SHEETS—SHEET 4.

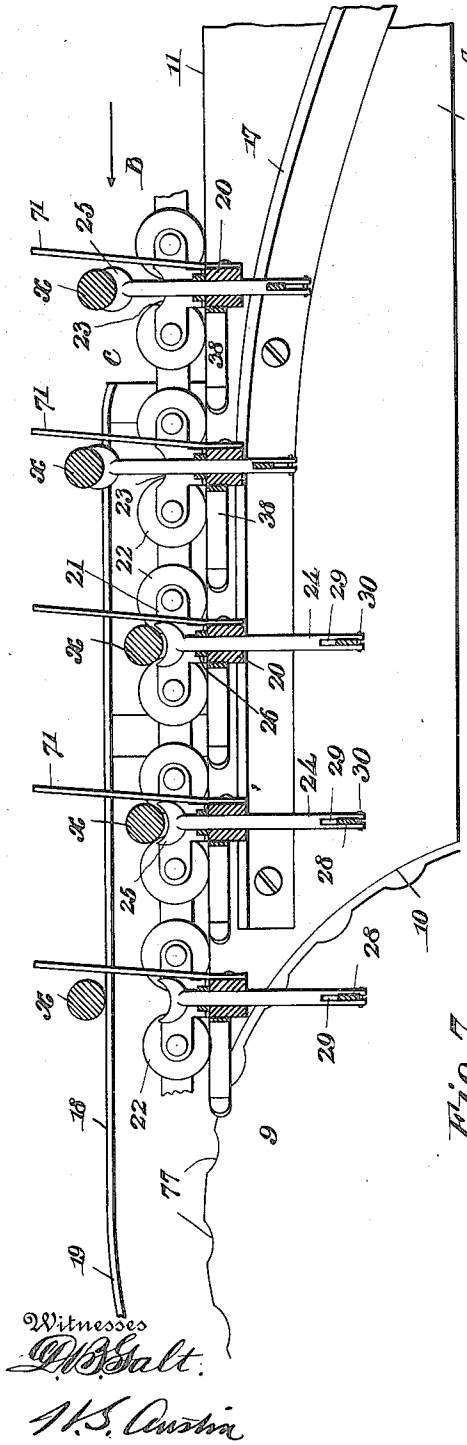

Fig. 7.

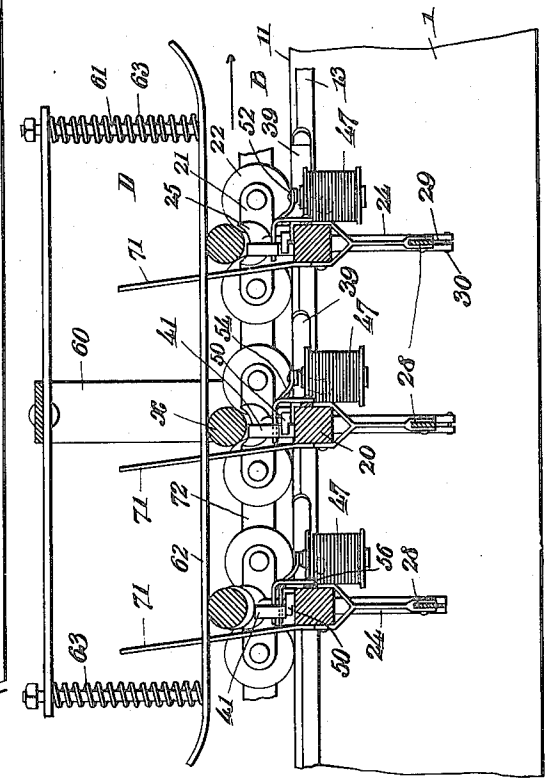

Fig. 6.

Witnesses

W. B. Galt.

W. S. Austin

Inventor

Adrianus M. de Jeu.

By Joshua R. H. Potts

Attorney

A. M. DE JEU.

CARBON ASSORTING DEVICE.

APPLICATION FILED JUNE 19, 1912. RENEWED NOV. 11, 1914.

1,123,703.

Patented Jan. 5, 1915.

5 SHEETS—SHEET 5.

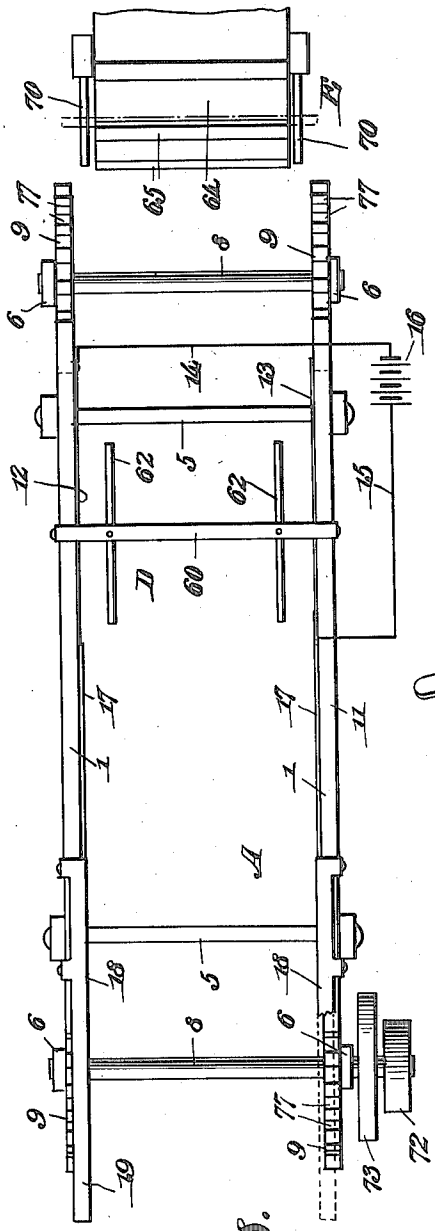

Fig. 8.

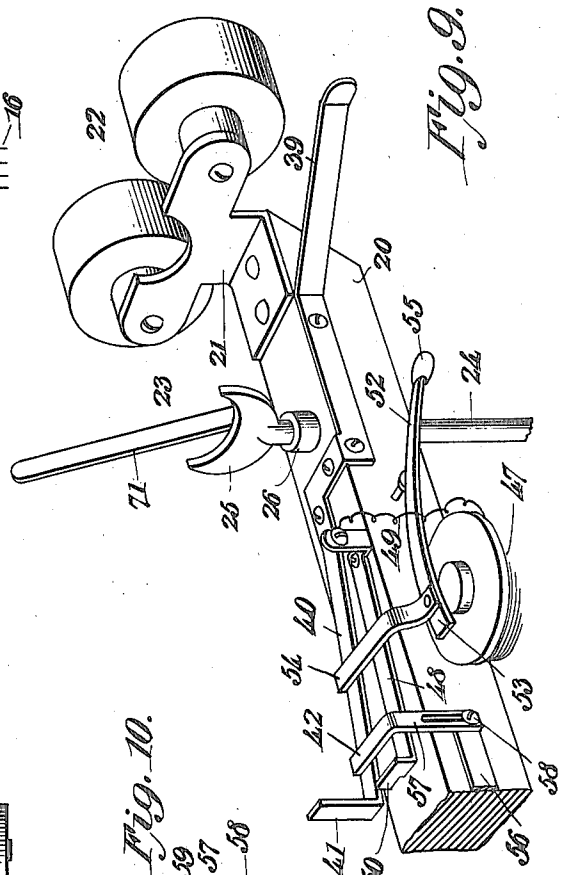

Fig. 9.

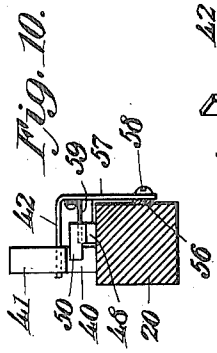

Fig. 10.

Witnesses

D. B. Galt.

J. L. Austin

Inventor

Adrianus M. de Jeu.

By Joshua R. H. Potts

Attorney

UNITED STATES PATENT OFFICE.

ADRIANUS MARINUS DE JEU, OF CLEVELAND, OHIO.

CARBON-ASSORTING DEVICE.

1,123,703. Specification of Letters Patent. Patented Jan. 5, 1915.

Application filed June 19, 1912, Serial No. 704,699. Renewed November 11, 1914. Serial No. 871,635.

To all whom it may concern:

Be it known that I, ADRIANUS M. DE JEU, a subject of the Queen of the Netherlands, residing at Cleveland, county of Cuyahoga, and State of Ohio, have invented certain new and useful Improvements in Carbon-Assorting Devices, of which the following is a specification.

My invention relates to assorting devices and particularly to devices especially adapted for assorting carbons such as are used in electric arc lamps.

While I have hereinafter described my invention as a carbon assorting device it is to be understood that it is adapted for assorting any articles of similar form within the capacity of the device.

The object of my invention is to provide an improved assorting device by means of which the straight carbons may be rapidly separated from the bent or crooked carbons.

A further object of my invention is to provide a device of the character under consideration which may be used for assorting carbons or other articles of different diameters without the necessity of adjusting the device for the various sizes.

A further object of my invention is to provide improved means for feeding the carbons to the assorting device.

Other objects will appear hereinafter.

With these objects in view my invention consists generally in an endless conveyer comprising a plurality of carriers suitably connected, a selecting device carried by each of the carriers for discarding crooked carbons, and means adapted to be set in operation by a crooked carbon for actuating the selecting device.

My invention further consists in a device as stated in which the carriers are provided with rollers which are continually driven and upon which the carbons are adapted to rest.

My invention further consists in a selecting device characterized as above stated and in which the selecting device is set in operation by the rotary motion of the carbon supported on the rollers, and further characterized by a yielding presser member to insure proper rotation of the carbon.

My invention further consists in a selecting device comprising a plurality of connected carriers and means for depositing the carbon from a magazine or hopper one at a time upon said carriers.

My invention further consists in various details of construction and arrangements of parts all as will be fully described hereinafter and particularly pointed out in the claims.

My invention will be more readily understood by reference to the accompanying drawings forming a part of this specification and in which—

Figure 1 is a diagrammatic side elevation of a selecting or assorting device and feed mechanism for the same, embodying my invention in its preferred form. Fig. 2 is a side elevation of the assorting device upon an enlarged scale and illustrating the adjacent end of the feed mechanism. Fig. 3 is a detail transverse section of the selecting device illustrating one of the carriers in front elevation and the parts in the position they assume when a straight carbon is deposited upon the same. Fig. 4 is a plan view of one of the carriers and the adjacent portions of the track upon which it is mounted. Fig. 5 is a view similar to Fig. 3 illustrating the parts in the position they assume after having been actuated by a bent carbon, a bent carbon being shown in the carrier and passing under the presser member. Fig. 6 is a detail longitudinal section illustrating a plurality of carriers, each with its carbon, passing under the presser member. Fig. 7 is a detail longitudinal section at the discharge end of the device illustrating the final steps in separating the straight from the crooked carbons. Fig. 8 is a top plan view of the frame of the selecting device, the carriers being removed. Fig. 9 is a perspective view of one end of one of the carriers, and Fig. 10 is a detail transverse section of one of the carriers taken on the line x—x of Fig. 4 and illustrating a slight modification.

Referring now to the drawings A indicates the frame of the assorting mechanism, B the conveyer thereon comprising a plurality of connected carriers C, D the presser member, E the feed mechanism for depositing the carbons one at a time on the carriers C and F the table or magazine from which the carbons are fed.

The frame A comprises a pair of upper

longitudinal members 1—1, a pair of lower longitudinal members 2, vertical members 3—3 rigidly connecting the upper and lower members 1 and 2 and extended downwardly forming legs 4—4 for the device, and transverse brace members 5 rigidly connecting the members 3. The upper members 1—1 are parallel and substantially horizontal, and form tracks for the upper lap of the conveyer B to travel upon. The lower members 2—2 are similarly arranged and serve as tracks for the lower or return lap of the conveyer. The ends of the lower members 2 are extended beyond the ends of the members 1 to support upwardly extending brackets 6—6 provided with bearings 7 for shafts 8 of wheels 9—9 upon which the conveyer is mounted. The upper edges of the members 1 are in a plane substantially tangent to the top of the wheels 9 and the ends of said members are shaped as at 10 to conform to the peripheries of said wheels in order to bring the upper edges or tracks 11 as close to the wheels 9 as possible, so that the carriers shall pass from the tracks and on to the wheels without dropping or sagging the conveyer.

Secured to the inner faces of the members 1 and extending longitudinally thereof a considerable distance from the feed end of the device is a pair of contact plates 12 and 13, connected respectively by conductors 14 and 15 to the opposite poles of a battery 16 or other source of electric supply. Also secured to the inner faces of the members 1 are flanges 17 which constitute cam tracks and which extend upwardly and forwardly from points beneath the contact plates 12 and 13, that is, the adjacent ends of the cam tracks 17 and the contact plates overlap for a purpose which will appear hereinafter. Supported above the discharge end of the device is a pair of bars 18. These bars extend from points above the adjacent end of the cam tracks 17 horizontally to points above the adjacent wheels 9, and are then curved forwardly and downwardly as at 19, and serve as guides or ways for the crooked and discarded carbons.

The endless conveyer B is composed of a plurality of similar carriers C and as these carriers are all identical in construction and operation a detailed description of one will be sufficient. In Figs. 3, 4, 5 and 9 I have illustrated a carrier in detail. Each carrier comprises an elongated body member 20 which extends transversely of the device, an upwardly extending bracket 21 secured to each end thereof and a pair of rollers 22 rotatably mounted upon each of said brackets. The rollers 22 travel upon the upper edges of the longitudinal members 1 and 2 and when upon the tracks 11 of the upper members 1 said rollers support a carbon X as indicated in Figs. 3, 5 and 6. As the carbons rest upon the peripheries of the rollers 22 it is obvious that a rotary motion is imparted to them. If preferred the brackets 21 may be recessed as at 23 in their upper edges between the rollers to avoid contact with the carbon. This will depend upon the distance between the rollers 22 of each pair and the diameter of the carbon or other device carried thereby.

Each carrier is equipped with a selecting device which is electrically set by means of the rotating crooked carbon and mechanically operated. Mounted for vertical reciprocation adjacent each end of the carrier is a vertically disposed rod 24. These extend through suitable apertures formed in the body 20 and are provided at their upper ends with forked or recessed members 25 which normally lie beneath the carbon and spaced therefrom so as not to interfere with the rotation of the same.

26 indicates a collar on the rod 24 to limit the downward movement. A pair of brackets 27—27 extend downwardly from the body, 20 toward the center, and in the lower ends of these brackets are pivotally supported substantially horizontally disposed levers 28 which are adapted to actuate the rods 24 to lift a crooked carbon from the rollers 22. The lower ends of the rods 24 are slotted as at 29 to receive the corresponding lever 28 and a pin 30 extending through the lower portion of the slotted end limits the downward movement of the lever. The slots 29 are of greater length than the width of the lever in order to admit of a limited free movement of the same without actuating the members 24. The levers 28 are preferably formed of flat metal and arranged on edge to facilitate pivotally mounting the same on the brackets 27 and to extend through the slots 29. The inner ends 31 and the outer ends 32 are bent into horizontal position as indicated, the inner ends to be engaged by a centrally arranged vertically reciprocating plunger 33 and the outer ends to engage the cam tracks 17 in the manner hereinafter described. The plunger 33 is arranged at the center of the carrier and mounted for vertical reciprocation therein. Its lower end is provided with an enlarged head 34 to engage the ends 31 of the levers and between said head and the body 20 is interposed a spring 35. The plunger 33 is normally retracted or held in raised position permitting the levers to drop into the positions shown in Fig. 3, in which positions the ends 32 are below the lowermost ends of the cam tracks 17.

When the plunger is released by a crooked carbon, in a manner hereinafter described, it depresses the inner ends of the levers 28 and raises the outer ends above the

level of the lower ends of the cam tracks and as the carrier moves forwardly said cam tracks elevate the levers and the rods 24, raising the carbons from the rollers 22 and into position to be engaged by or deposited upon the bars 18. Extending through the upper end of the plunger 33 is a horizontally disposed pin 36, one end of which is arranged in a vertically disposed guide 37 secured to the upper face of the carrier.

It is obvious that if a crooked carbon is supported in the carriers it will be necessary to initially actuate the levers 28 by releasing the plunger 33 before the carrier reaches the rear or lowermost end of the cam tracks 17. To this end I provide the following electrically operated controlling mechanism. Fixed to the respective ends of the carrier body 20 are spring tongues 38 and 39 which serve as wipers to engage the electrically connected contact plates 12 and 13 hereinbefore described. 40 indicates an upwardly and inwardly extending spring tongue secured to the upper face of the carrier body and terminating in an upturned end 41 adjacent the center of the carrier. The tongue 40 is electrically connected to the wiper 39 and is preferably formed integrally therewith as illustrated clearly in Fig. 9. An adjustable arm 42 limits the upward movement of the tongue 40 and is electrically connected to the wiper 38. 43 indicates an electromagnet arranged in the circuit between the arm 42 and the wiper 38. Pivotally mounted on the carrier body 20 as at 44 is a lever one arm 45 of which is arranged above the electromagnet 43 and the other end 46 extending beneath the pin 36. As hereinbefore stated the contact plates 12 and 13 extend to the feed end of the members 1 and it is obvious that as soon as the wipers 38 and 39 engage said plates, and as long as the tongue 40 engages the arm 42, the electromagnet 43 will be energized, attracting the arm 45 and raising the arm 46, thereby raising the plunger 33 and maintaining the same in retracted position. This allows the ends 32 of the levers 28 to drop, and unless the circuit above described is broken, said ends 32 will remain depressed and pass under the cam track 17. The end 41 of the tongue 40 extends upwardly almost to engagement with a straight carbon resting upon the rollers 22, and it is therefore obvious that if the bent carbon is supported upon the rollers and rotated thereby it will engage the end 41, depress the tongue 40 and break the circuit. This deënergizes the electromagnet 43, releases the plunger 33 and permits the same to actuate the levers 28 to raise the ends 32 above the plane of the ends of the cam tracks 17.

After the circuit through the electromagnet 43 has been broken by means of a crooked carbon, it is necessary to maintain the broken circuit otherwise the ends 32 would be permitted to drop before they reach the cam tracks. To this end I provide an electromagnet 47 which is energized upon the breaking of the circuit to the electromagnet 43 and also provide means operated thereby for maintaining the broken circuit.

48 indicates a spring tongue fixed to the body 20 and lying substantially parallel with the tongue 40. This is electrically connected, as indicated at 49, with one end of the winding of the electromagnet 47, and its free end is off-set as at 50 to extend beneath the tongue 40. The end 50 is upturned as illustrated and lies in close proximity to said tongue. The other end of the winding of the electromagnet 47 is electrically connected as indicated at 51 to the wiper 38. It is obvious that when the tongue 40 is depressed out of engagement with the arm 42 and thereby breaking the circuit to the electromagnet 43, the circuit will be made through the electromagnet 47.

52 indicates a lever pivotally mounted on the carrier, one end 53 of which constitutes an armature for the electromagnet 47 and is attracted and depressed by said electromagnet when energized. The arm 53 is provided with an off-set tongue 54 which engages the tongue 40 when depressed and holds the same out of engagement with the arm 42, in this manner maintaining a broken circuit to the electromagnet 43. The opposite end of the lever 52 is weighted as at 55 to restore the lever to normal position when the electromagnet 47 is deënergized.

In order that the device may be used to assort carbons or other articles of either large or small diameter, and also in order that the device may be adjusted to regulate its sensitiveness with relation to the degree of curvature of the articles, I adjustably mount the arm 42. By raising or lowering said arm the height of the end 41 is regulated. If articles of large diameter are to be assorted it is obvious that when resting upon the rollers 22 their lower edges will be at a greater distance from the body 20 than when articles of smaller diameter are resting thereon. Consequently it is necessary to raise the end 41, which may be done by raising the arm 42. Conversely when articles of smaller diameter are being assorted it is necessary to lower the end 41 as they lie closer to the body 20. It is also obvious that this adjustment will regulate the sensitiveness of the device to different degrees of curvature of the articles being assorted. To secure the proper adjustment and maintain the proper electrical connection, a bar or conductor 56 is secured to the front face of the body 20, and the arm 42 is formed with a downwardly projecting slotted portion 57

engaging the bar 56 and through which a set screw 58 extends. If a wide range of adjustment is desired I provide an insulated lug or tongue 59 on the arm 42 which engages the tongue 48 and maintains proper relative position between the tongue 40 and the contact ends 50 of the tongue 48. This modified form is illustrated in Fig. 10.

To insure proper rotation of the carbons on the carriers, I provide the presser members D. This comprises a yoke or bracket 60 spanning the frame A adjacent the feed end, vertically disposed rods 61 extending through perforations therein, horizontal longitudinally disposed shoes 62 at the lower ends of said rods and springs 63 interposed between said bracket and said shoes whereby said shoes are held in yielding engagement with the carbons X.

I do not limit my invention to the particular arrangement of the shoes 62, but I prefer to provide two such shoes as illustrated and arrange them toward the sides of the device in order to engage the carbons adjacent their ends, by which arrangement one or more straight carbons under the shoes will not prevent engagement with and proper rotation of the bent carbons. In Fig. 6 I have illustrated three carriers and the carbon supported thereby passing under the presser members, the carriers traveling in the direction of the arrow. The carbons in the right hand and center carriers are indicated as being straight and the one in the left hand carrier as being crooked, and it will be noted that in the former the levers 28 have not been actuated whereas in the latter it has, as has also the spring tongue 40. The several carriers C are connected at the ends by links *c* which are preferably secured to the shafts of the rollers 22, thereby uniting the carriers into an endless conveyer.

The feed mechanism comprises an endless belt provided with spaced slats, a magazine table and suitable mechanism for feeding the carbons one at a time from the table to the slats on said belt. 64 indicates the belt, 65 the slats, F the table and 66 the mechanism for feeding the carbons from the table to the belt. The table F is inclined and its lower end is arranged above the belt 64. At the discharge end of the magazine table is arranged a reciprocating member 67 which is actuated intermittently by a cam wheel 68 on the shaft of one of the belt drums 69 to feed the carbons one at a time to the slats 65 on the belt. The discharge end of the belt 64 is arranged adjacent the feed end of the assorting device proper and said belt deposits the carbons upon forwardly projecting arms 70. Each of the carriers is provided with a pair of upwardly and slightly rearwardly inclined arms 71 which lift the carbons from the arms 70 and deposit the same upon the rollers 22.

One of the shafts 8 is extended and provided with a pair of pulleys 72 and 73 respectively. A belt 74 extends from a motor not shown, to the pulley 72, and a belt 75 extends from the pulley 73 to the pulley 76 on one of the shafts of the belt 64, by which arrangement the conveyer B and belt 64 are simultaneously driven and properly timed. In this connection it should be noted that the peripheries of the wheels 9 are recessed as at 77 to receive portions of the rollers 22.

The operation of the device is as follows: The carbons, or other articles to be assorted, are placed upon the inclined table F and the device set in motion. The cam wheel 68 causes reciprocation of the member 67 allowing one carbon at a time to drop upon the belt 64, and the cam wheel is so time that one carbon is dropped between the successive slats thereon. The belt or apron 64 deposits the carbons one at a time upon the arms 70, and the conveyer B is so timed that the arms 71 thereon remove each carbon from the arms 70 before another carbon is deposited thereon. This transfer of the carbons to the conveyer takes place as the carriers are passing upwardly around the wheels 9 at the feed end of the device and just above the center thereof, and as the carriers pass upwardly to the top of said wheels the carbons are rolled inwardly on the arm 71 and deposited with their ends resting upon the wheels 22. As the carriers reach the top of the wheels, or on a level with the track 11, the wipers 38 and 39 come in contact with the contact plates 12 and 13 respectively, closing the circuit through the electromagnet 43 and energizing the same. The energized electromagnet 43 actuates the lever 45—46 and raises the plunger 33, permitting the ends 32 of the levers 28 to drop below the level of the lower rear end of the cam tracks 17. Further movement brings the carbons beneath the presser member or shoes 62 thereby insuring rotation of the carbons. If the carbon is straight it passes on through the device and is dropped from the conveyer B at the discharge end thereof into a suitable receptable provided for their reception but not illustrated in the drawing. When a crooked or bent carbon is rotated upon the rollers 22 and beneath the presser shoe 62 it engages and depresses the end 41 of the spring tongue 40, breaking the circuit to the electromagnet 43 as hereinbefore described and closing the circuit to the electromagnet 47. This releases the plunger 33 which in turn raises the ends 32 of the levers 28 above the level of the rear end of the cam tracks 17 and the arm 54 insures the parts remaining in this position until

the ends 32 of the levers are well upon the tracks 17. It is for this purpose that the adjacent ends of the contact plates 12 and 13 and of the tracks 17 overlap, which arrangement also insures the passage of the ends 32 beneath the track 17 when a straight carbon is on the carrier. Further movement of the carrier with the crooked carbon causes the ends 32 to ride up on the cam tracks 17, thereby raising the rods 24 and lifting the carbon from the rollers 22 above the level of the bars 18 upon which they deposit the same. This action is clearly illustrated in Fig. 7 of the drawings, the carriers moving in the direction of the arrow. After the bent carbon is deposited upon the bars 18 the arms 71 move the same along thereon to the bent end whence they roll off into a separate receptacle not shown.

Having described my invention what I claim as new and desire to secure by Letters Patent is:—

1. In an assorting device, the combination of means for carrying and rotating a carbon; means for diverting a carbon from the path of movement normally imparted by said carrier; means controlled by the carbon while being rotated for actuating said diverting means, and means on said carrying means adapted to move the carbons while so diverted.

2. In an assorting device, the combination of means for carrying and rotating a carbon; means for guiding carbons along a path of movement substantially parallel to that provided by said carrier; and means controlled by a carbon's rotation for diverting the carbon so as to engage said guiding means.

3. In an assorting device, the combination with means for carrying and rotating a carbon; of means controlled by the rotation of such carbon for diverting the latter into a path other than that imparted normally by said carrier and having a direction the same as that of such normal path.

4. In an assorting device, a carrier, carbon elevating means thereon, means for raising said elevating means, a selecting device actuated by the carbon for governing the last said means, and ways to receive a carbon from said elevating means, substantially as described.

5. In an assorting device, a track, a carrier provided with a pair of rollers at each end adapted to travel on said track, said rollers being adapted to support a carbon and rotate the same thereon, discarding means carried by said carrier and means operable by the rotation of a bent carbon for setting said discarding means, substantially as described.

6. In an assorting device, a track, a carrier adapted to travel on said track, means for rotating a carbon on said carrier, ways provided above said track for receiving and discharging crooked carbons, means on said carrier for elevating a carbon to deposit the same on said ways, actuating means for said elevating means, and means controlled by the rotation of the carbon on the carrier for setting said elevating means into cooperation with said actuating means, substantially as described.

7. In an assorting device, an endless conveyer comprising a plurality of connected similar carriers each adapted to support a carbon, means for rotating the carbons on said carriers, means supported above said conveyer adjacent the discharge end of the device to receive discarded carbons, and selecting mechanism controlled by the rotation of the carbons on said carriers for elevating and depositing crooked carbons on said receiving means, substantially as described.

8. In an assorting device, a track, a carrier adapted to travel on said track, cam tracks arranged below the first said track, means for supporting and rotating a carbon on said carrier, discarding mechanism adapted to engage and be actuated by said cam track to discard a bent carbon, and means actuated by the rotation of a bent carbon for setting said discarding mechanism in position to engage said cam tracks, substantially as described.

9. In an assorting device, a track comprising a pair of parallel members, a carrier provided with a pair of rollers at each end adapted to travel on said track, said rollers being adapted to support a carbon and rotate the same thereon, a pair of vertically reciprocating rods on said carrier provided with forked upper ends adapted to engage under the carbon when raised, a pair of levers supported by said carrier and adapted to raise said rods, cam tracks for actuating said levers, a plunger for setting said levers to be actuated by said cam tracks, and means actuated by the rotation of the carbon for controlling the operation of said plunger, substantially as described.

10. In an assorting device, a track comprising a pair of parallel members, a carrier provided with a pair of rollers at each end adapted to travel on said track, said rollers being adapted to support a carbon, and rotate the same thereon, carbon elevating means on said carrier, levers supported by said carrier and adapted to actuate said elevating means, cam tracks for actuating said levers, and means controlled by the rotation of the carbon for setting said levers with relation to said cam tracks, substantially as described.

11. In an assorting device, a track comprising a pair of parallel members, a car-

rier provided with a pair of rollers at each end adapted to travel on said track, said rollers being adapted to support a carbon and rotate the same thereon, a pair of vertically reciprocating rods on said carrier provided with forked upper ends arranged beneath the carbon, a pair of levers arranged beneath said carrier and supported thereby for raising said rods, cam tracks for actuating said levers, a spring pressed plunger adapted when released to engage said levers and set the same in position to be actuated by said cam tracks, means normally holding said plunger in retracted position, and means actuated by the rotation of a crooked carbon for operating the last said means to release said plunger, substantially as described.

12. In an assorting device, a carrier, means for supporting and rotating a carbon thereon, a pair of vertically reciprocating rods on said carrier, provided with carbon engaging upper ends arranged beneath the carbon a pair of levers arranged beneath said carrier for actuating said rods, cam tracks for operating said levers, a spring pressed plunger adapted when released to engage said levers and set the same in position to be actuated by said cam tracks, means normally holding said plunger in retracted position, and means actuated by the rotation of a crooked carbon for operating the last said means to release said plunger, substantially as described.

13. In an assorting device, a carrier, means for supporting and rotating a carbon thereon, a pair of vertically reciprocating rods on said carrier provided with carbon engaging upper ends arranged beneath the carbon, a pair of levers arranged beneath said carrier for raising said rods, cam tracks for operating said levers, a spring pressed plunger adapted when released to engage said levers and set the same in position to be actuated by said cam tracks, electro-magnetic means normally holding said plunger in retracted position, means actuated by the rotation of a bent carbon for controlling said electro-magnetic means to release said plunger, substantially as described.

14. In an assorting device, a carrier, means for supporting and rotating a carbon thereon, a pair of vertically reciprocating carbon elevating devices on said carrier, a pair of levers arranged beneath said carrier for operating said elevating devices, cam tracks for actuating said levers, a spring pressed plunger adapted when released to engage said levers and set the same in position to be actuated by said cam tracks, means normally holding said plunger in retracted position, means actuated by the rotation of a bent carbon for operating the last said means to release said plunger, and means for maintaining said levers in set position until in engagement with said cam tracks, substantially as described.

15. In an assorting device, a track comprising a pair of parallel members, a carrier adapted to travel thereon, means for supporting and rotating a carbon on said carrier, a carbon elevating device on said carrier, a lever on said carrier adapted to operate said elevating device, stationary means adapted to engage said lever to actuate the same, a plunger adapted to engage said lever to set the same in position to engage said stationary means, means normally holding said plunger in retracted position, means actuated by the rotation of a bent carbon for operating the last said means to release said plunger, and means for maintaining said lever in set position until brought into engagement with said stationary means, substantially as described.

16. In an assorting device, a frame including a pair of parallel members forming a track, in combination with an endless conveyer comprising a plurality of connected similar carriers, each of said carriers comprising a body, a pair of rollers mounted at each end of said body and arranged on said track, said rollers being adapted to support and rotate a carbon, a carbon elevating device on said body, a lever pivotally mounted on said body and adapted to operate said elevating device, a cam track on said frame members, a spring pressed plunger adapted when released to engage said lever to set the same in position to engage said cam track, electro-magnetic means normally holding said plunger in retracted position, and means actuated by the rotation of a bent carbon for operating the last said means to release said plunger, substantially as described.

17. In an assorting device, a carrier, means for supporting and rotating a carbon thereon, a pair of vertically reciprocating rods on said carrier provided with carbon engaging upper ends, the lower ends of said rods being provided with slots, a pair of levers arranged beneath said carrier and having one arm of each extending through the slot in the respective rod, said slots being adapted to permit a limited movement of the levers without actuating the rods, cam tracks for actuating said levers, a spring pressed plunger adapted when released to engage said levers and set the same in position to be actuated by said cam tracks, means normally holding said plunger in retracted position and means actuated by the rotation of a bent carbon for operating the last said means to release said plunger, substantially as described.

18. In an assorting device, a carrier, carbon discarding means on said carrier, a

lever for operating said discarding means, a cam track for actuating said lever, lever setting means adapted when released to set the lever to engage said track, means for normally holding said lever setting means in retracted position, an electro-magnet controlling the last mentioned means, a pair of contacts normally in engagement to close the circuit through said magnet, one of said contacts being adapted to be moved out of engagement with the other by the rotation of a bent carbon, substantially as described.

19. In an assorting device, a carrier, means for rotating a carbon thereon, carbon discarding means on said carrier, a lever for actuating said discarding means, a cam track adapted to be engaged by said lever to operate the same, a plunger adapted when released to engage said lever to set the same in position to engage said cam track, electro-magnetic means normally holding said plunger in retracted position, a fixed contact member, a spring tongue contact engaging under said fixed contact and having an upturned end adapted to be engaged and depressed by a bent carbon when rotated, substantially as described.

20. In an assorting device, a carrier, means for rotating a carbon thereon, carbon discarding means on said carrier, a lever for actuating said discarding means, a cam track adapted to be engaged by said lever to operate the same, a plunger adapted when released to engage said lever to set the same in position to engage said cam tracks, electro-magnetic means normally holding said plunger in retracted position, a stationary contact member and a spring tongue contact engaging under said stationary contact to close the circuit to said electro-magnetic means, said spring tongue contact having an upturned end adapted to be engaged and depressed by a bent carbon when rotated, and means for adjusting said contacts with relation to the carbon, substantially as described.

21. In an assorting device, a carrier, means for rotating a carbon thereon, carbon discarding means on said carrier, a lever for actuating said discarding means and having a limited initial movement, a plunger adapted when released to engage said lever to impart initial movement thereto, a cam track in the path of the end of said lever when actuated by said plunger, a lever controlling said plunger, an electro-magnet adapted when energized to operate said lever to retract said plunger and hold the same in retracted position, a pair of contacts closing the circuit to said magnet, one of said contacts being in the path of rotation of a bent carbon, and adapted to be depressed thereby, a third contact arranged below the depressible contact, a second electro-magnet, a circuit to said second magnet closed by said depressible and said third contacts and means operable by said second magnet for maintaining its own circuit closed and the circuit to the first mentioned magnet broken, substantially as described.

22. In an assorting device, a frame, an endless conveyer thereon comprising a plurality of connected similar carriers, means on each of said carriers for supporting and rotating a carbon, means for feeding carbons one at a time to the successive carriers at one end of the device, ways supported above the opposite end of the device for receiving discarded carbons, means controlled by the rotation of a bent carbon for raising the same and depositing it upon said ways, and means on said carriers to engage said carbons after being deposited on said ways and move the same thereon to the discharge end, substantially as described.

23. In an assorting device, an endless conveyer comprising a plurality of connected similar carriers, selecting mechanism upon each of said carriers, a support arranged adjacent the feed end of the device, means for depositing carbons one at a time upon said support, and arms on each of said carriers adapted to remove the carbons from said support and deposit the same in position upon the carriers, substantially as described.

24. In an assorting device, a frame including a pair of parallel longitudinally disposed members, the upper edges thereof constituting a track, an endless conveyer comprising a plurality of connected similar carriers, the upper lap of said conveyer being adapted to travel on said track, cam tracks on said frame members, contact plates secured to the said frame members and connected to the opposite poles of a source of electric supply, said plates extending beyond the adjacent ends of said cam tracks, discarded carbon receiving means supported above said conveyer and extending from above the opposite ends of said tracks to the discharge end of the device, each of said carriers being provided with means for supporting and rotating a carbon thereon, a pair of wipers engaging said contact plates respectively, carbon elevating means, levers pivotally mounted on the carrier and connected with said elevating means, one end of said levers being adapted to engage said cam tracks to operate said elevating means, a plunger adapted when released to engage said levers to raise said ends into position to engage said tracks, electro-magnetic means connected to said wipers and adapted to normally maintain said plunger in retracted position, and means operable by the rotation of a bent carbon for breaking the circuit to said electro-magnetic means to release said plunger, substantially as described.

25. In an assorting device, a pair of parallel members constituting a track, an endless conveyer comprising a plurality of connected similar carriers, each of said carriers provided with a pair of rollers at each end adapted to travel on said track, said rollers being adapted to support and rotate a carbon thereon, a selecting device on each of said carriers controlled by the rotation of a bent carbon, and a presser member arranged above said conveyer and adapted to engage the carbons on the carriers, substantially as described.

In testimony whereof I have signed my name to this specification in the presence of two subscribing witnesses.

ADRIANUS MARINUS DE JEU.

Witnesses:

YKE A. HEPLAMA,

MARINE LEUNK.