April 23, 1935. W. E. MUSGRAVE 1,998,684

ERASER ATTACHMENT FOR LEAD PENCILS

Filed April 30, 1934

Fig. 1.

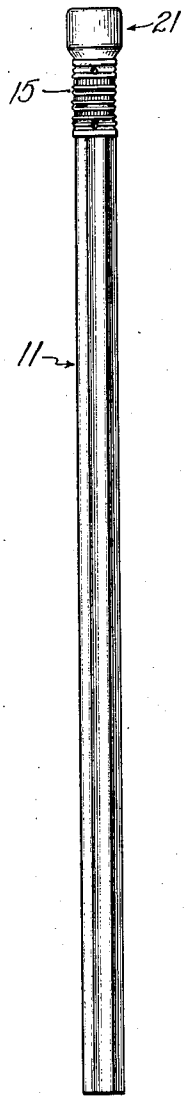

Fig. 2.

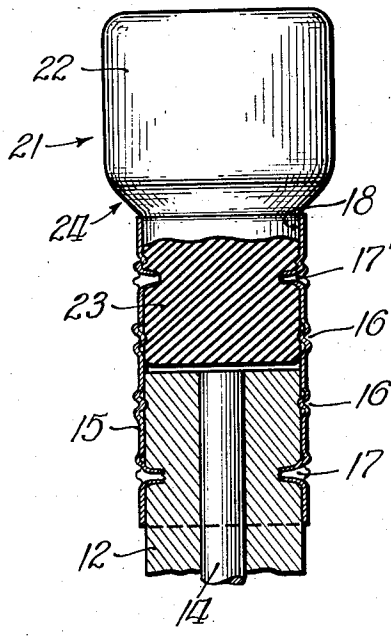

Fig. 3.

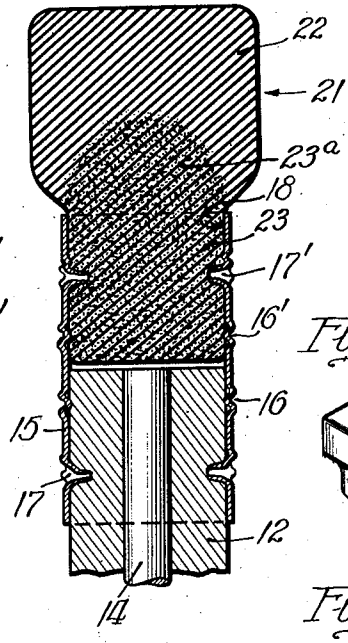

Fig. 6.

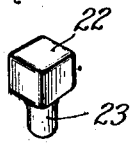

Fig. 7.

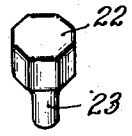

Fig. 4.

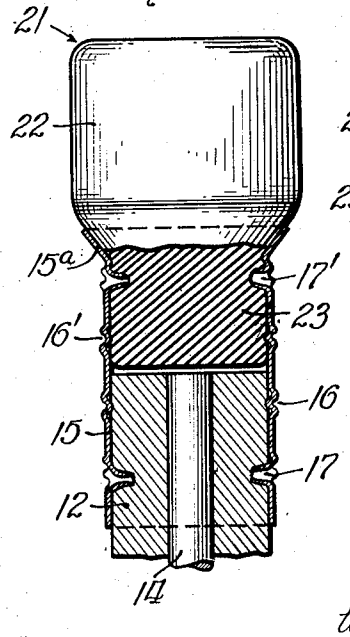

Fig. 5.

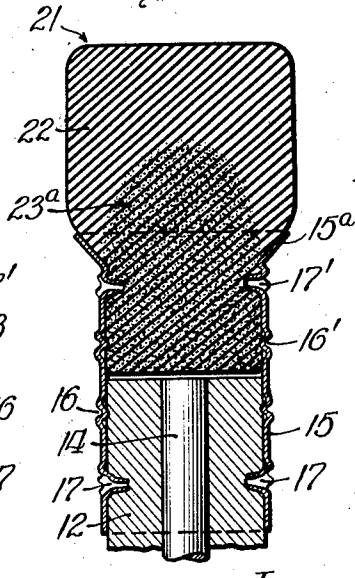

Fig. 8.

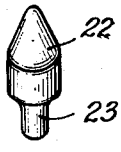

Inventor:
William Edgar Musgrave
By: Brown, Jackson, Boettcher & Dienner
Atty's.

Patented Apr. 23, 1935 1,998,684

UNITED STATES PATENT OFFICE

1,998,684

ERASER ATTACHMENT FOR LEAD PENCILS

William Edgar Musgrave, Chicago, Ill.

Application April 30, 1934, Serial No. 723,038

3 Claims. (Cl. 120—38)

My invention relates to eraser attachments for lead pencils and the like.

The general object of the invention is to provide an improved eraser attachment which will have a much longer life than the majority of erasers now supplied on pencils. For example, my improved eraser supplied on the end of a conventional wood pencil lasts substantially as long as the pencil.

More specifically, it is one of the objects of the invention to provide an improved eraser characterized by a head portion which is considerably larger than the diameter of the pencil, and by a shank portion which is of substantially the same diameter as that of the pencil. The relatively small shank portion is receivable within a ferrule on the end of the pencil, by which the eraser is attached to the pencil, and the relatively large head portion protrudes outwardly beyond this ferrule. The shank portion which extends down into the ferrule is waste rubber in the sense that it cannot be used for erasing, and by reducing this shank portion down substantially to the diameter of the pencil there is effected a decided saving in the cost of these rubber erasers. Furthermore, in one embodiment of my invention, this reduced shank portion adapts itself to attachment in a conventional ferrule of substantially the same diameter from end to end thereof, so that the eraser is usable in conventional designs of pencils without requiring any alteration or change in the size or shape of the ordinary ferrule. The enlarged head portion affords much more rubber for erasing purposes than the conventional eraser which is ordinarily of the same diameter from end to end. It also affords a larger area of erasing surface. Practically the entire body of this enlarged head portion can be used until the eraser is worn down substantially to the small diameter shank portion, or until the eraser is worn down to the top edge of the ferrule.

Another object of the invention is to reenforce the eraser at the point of juncture between the reduced shank portion and the enlarged head portion, where considerable flexing strain is borne by a reduced cross-section of rubber. One of these reenforcing features is the provision of a beveled or tapered annular surface formed in the eraser at this point of juncture for distributing the flexing stresses over an appreciable length of the eraser. Another reenforcing feature is that of making the shank portion of a stiffer consistency of rubber, and preferably extending this stiffer material upwardly into the body of the enlarged head portion. Another reenforcing feature is to provide a beveled annular shoulder or lip protruding outwardly from the upper edge of the ferrule for cooperating with the aforementioned beveled surface or shoulder formed on the eraser.

Other objects and advantages of the invention will appear from the following detail description of certain preferred embodiments thereof. In the accompanying drawing illustrating such embodiments:—

Figure 1 is an elevational view showing my improved eraser attachment applied to a conventional wood pencil;

Figure 2 is a fragmentary sectional view, on an enlarged scale, showing one embodiment of my improved construction;

Figure 3 is a similar view illustrating the construction wherein the shank portion is made of a stiffer consistency of rubber and wherein this stiffer consistency is extended up into the body of the enlarged head portion;

Figure 4 is a similar view showing the provision of a beveled shoulder or lip on the upper end of the ferrule for cooperating with the beveled surface formed in the eraser between the shank portion and the head portion;

Figure 5 is a similar view showing a construction wherein the reenforcing features illustrated in Figures 3 and 4 are employed conjointly.

Figures 6, 7 and 8 are detail perspective views illustrating different shapes which may be given the enlarged head portion of the eraser.

A conventional pencil is indicated at 11, comprising the wood body portion 12 enclosing the lead 14. This pencil may be cylindrical, hexagonal, or of any other desired shape. Affixed to the upper end of this pencil is a metallic ferrule 15. The attachment may be effected in any desired manner, represented by annular beads 16 which are creased into the wood of the pencil, and by punch pricks 17 punched into the pencil. That portion of the ferrule projecting beyond the body of the pencil defines a socket 18 for receiving the shank portion of the eraser. It will be noted that in the embodiments illustrated in Figures 2 and 3 the ferrule 15 is of substantially the same diameter from end to end thereof, so that the entire depth of the eraser receiving socket 18 is of substantially the same diameter as the pencil.

My improved eraser 21 comprises the aforementioned head portion 22 and shank portion 23. At the juncture between the head and shank there is preferably formed a beveled annular surface or shoulder 24. The shank portion 23 is secured

within the socket portion 18 of the ferrule in any suitable manner, represented by annular beads 16' and prick punchings 17' similar to those referred to above. If desired, the eraser might be cemented in the socket 18.

The provision of the tapered surface 24 reenforces the juncture between the enlarged head portion and the reduced shank portion by virtue of distributing flexing stresses over a greater length of the rubber, rather than concentrating them substantially at the top edge of the ferrule 15. This surface may consist of a longer, more gradual taper for distributing the flexing stresses over a greater length of the rubber, if desired. Likewise, the head portion 22 may be otherwise proportioned so long as it increases the amount of rubber available for erasing purposes. In the exemplary proportions illustrated, the head portion affords more than twice as much useful rubber than if it were of the same diameter as the shank portion. The embodiment of Figure 2 represents the eraser as being of the same consistency of rubber in both the head and shank portions.

In the embodiment illustrated in Figure 3, the shank portion 23 is composed of a stiffer consistency of rubber, and, preferably, this stiffer material is extended up into the body of the head portion 22, substantially as indicated at 23a. This stiffer consistency may be obtained by a greater proportion of abrasive material, by an increased amount of sulphur or by the use of other curing agents having this stiffening characteristic, by a longer interval of curing, by a higher curing temperature, or by any well known practice for making this portion of the rubber more resistant to tearing or breaking at the juncture point between the head and shank of the eraser. There is complete molecular fusion or cohesion between the rubber of the relatively stiff shank extension 23a and the rubber of the remaining head portion surrounding this shank extension, whereby there is no possibility of separation between the two. As illustrative of one method of making such an eraser, the rubber of stiffer consistency constituting the portions 23, 23a may be molded separately and partially cured before the rubber constituting the remainder of the head portion is molded and cured over the shank extension 23a; although it will be understood that the entire eraser might be molded and cured as a unit. Attention is directed to the fact that by extending the shank extension 23a of relatively stiffer consistency up into the head portion 22, the eraser is materially reenforced against flexing stresses adjacent to the top edge of the ferrule 15 without reducing the amount of rubber available for erasing purposes, since the shank extension 23a affords an effective erasing medium, being only slightly stiffer or possibly more abrasive. When employing this method of reenforcing the eraser, the head portion 22 may be extended down to a square shoulder projecting outwardly at right angles directly above the top edge of the ferrule 15, if desired; although in the preferred embodiment using the stiffer consistency of shank portion I retain the beveled surface 24, substantially as shown.

In the embodiment illustrated in Figure 4, the ferrule 15 is formed with an outwardly diverging flange or lip 15a around its upper edge. The tapered surface 24 of the eraser fits snugly against the tapered surface of this flange 15a, whereby the juncture between the head portion and shank portion is reenforced by the ferrule against flexing stresses. The provision of this tapered flange does not objectionably decrease the amount of rubber in the head portion available for erasing purposes.

The embodiment illustrated in Figure 5 combines the reenforcing features disclosed in Figures 3 and 4. The shank portion 23 is composed of rubber of a stiffer consistency, and this stiffer material is extended up into the head portion, as indicated at 23a and as previously described; and the ferrule 15 is provided with the outwardly tapered lip 15a for engagement against the tapered surface 24 of the eraser. In such a construction, the eraser is doubly reenforced against the flexing stresses at the base of the head portion.

The head portion may be given different distinctive shapes for utilitarian, ornamental or advertising purposes. For example, it may be square or cubical in outline, as illustrated in Figure 6, hexagonal or octagonal, as illustrated in Figure 7, or it may be provided with a conical tip, as illustrated in Figure 8. In any of these modified formations, reenforcement may be established between the enlarged head portion and the reduced shank portion, such as by the provision of the beveled surface 24, the extension of the shank portion 23a of stiffer consistency up into the body of the head portion, and/or the provision of the beveled flange 15a on the ferrule.

By virtue of the reduced shank portion 23, which is of no larger diameter than that of the conventional eraser socket 18 of the ordinary pencil, each and every one of the above described embodiments of my improved eraser can be affixed within the regular ferrule of the ordinary pencil. It will also be understood that my invention is adaptable to mechanical feed pencils, fountain pens and the like.

While I have illustrated what I regard to be the preferred embodiments of my invention, nevertheless it will be understood that such are merely exemplary and that various changes in the size, shape, proportion and minor details of construction may be made without departing from the essence of the invention.

For example, with particular reference to Figures 3 and 5, while my preferred embodiment of eraser utilizing different compositions or treatments of rubber for the head and shank portions is one wherein the shank portion 23, 23a is of a stiffer consistency than the head portion, nevertheless this relation might be reversed or modified so that this shank portion 23, 23a would consist of extremely elastic or pliable rubber whereby to minimize the possibility of tearing or breaking from lateral flexing at the juncture between the head and the shank. As another alternative construction, where rubber of stiffer consistency is employed in the shank portion 23, 23a, this same stiffer rubber might also be extended throughout the head portion so that the entire eraser would be of this same relatively stiff consistency.

I claim:—

1. An article of manufacture for attachment to a pencil, comprising a ferrule adapted to be permanently and immovably secured to one end of said pencil and being of substantially the same diameter from end to end thereof, and an eraser consisting of a shank portion of relatively small diameter and a head portion of relatively large diameter, said shank portion being secured within said ferrule and said head portion protruding

outwardly beyond said ferrule, said shank portion being composed of a stiffer consistency of rubber than said head portion, and including an extension projecting upwardly into the body of said head portion.

2. An article of manufacture for attachment to a pencil, comprising a ferrule for mounting on one end of said pencil, and an eraser consisting of a shank portion of relatively small diameter, a head portion of relatively large diameter, and a beveled annular shoulder joining said shank portion with said head portion, said shank portion being secured within said ferrule and said head portion and shoulder protruding outwardly beyond said ferrule, a stiffer consistency of rubber composing said shank portion and extending upwardly into the body of said head portion.

3. An article of manufacture for attachment to a pencil, comprising a ferrule adapted to be permanently and immovably secured to one end of said pencil and formed with an outwardly flaring annular lip at its upper edge, and an eraser consisting of a shank portion of relatively small diameter, a head portion of relatively large diameter, and a beveled annular shoulder at the juncture between said head portion and said shank portion, said shank portion being fixedly secured within said ferrule and said shoulder abutting against said outwardly flaring lip on said ferrule, said shank portion being composed of a relatively stiffer consistency of rubber than the major part of said head portion, said relatively stiffer consistency of rubber extending up into said head portion and having molecular cohesion with the rubber of said head portion, and minimizing lateral flexing of the eraser at the juncture between said head portion and said shank portion.

WILLIAM EDGAR MUSGRAVE.