(19) Europäisches Patentamt
European Patent Office
Office européen des brevets

(11) EP 0 667 068 B1

(12) EUROPEAN PATENT SPECIFICATION

(45) Date of publication and mention of the grant of the patent:
12.02.1997 Bulletin 1997/07

(21) Application number: **94926602.7**

(22) Date of filing: **24.08.1994**

(51) Int Cl.[6]: **H04B 7/04**, H01Q 21/29, H04B 7/26, H04Q 7/36

(86) International application number:
PCT/US94/09657

(87) International publication number:
WO 95/06365 (02.03.1995 Gazette 1995/10)

(54) DUAL DISTRIBUTED ANTENNA SYSTEM

Dual verteiltes Antennensystem

SYSTEME D'ANTENNES A DOUBLE DISTRIBUTION

(84) Designated Contracting States:
AT BE CH DE DK ES FR GB GR IE IT LI LU MC NL PT SE

(30) Priority: **27.08.1993 US 112392**

(43) Date of publication of application:
16.08.1995 Bulletin 1995/33

(73) Proprietor: **QUALCOMM INCORPORATED**
San Diego, California 92121 (US)

(72) Inventors:
- **DEAN, Richard, F.**
  Escondido, CA 92029 (US)
- **ANTONIO, Franklin, P.**
  Del Mar, CA 92014 (US)
- **GILHOUSEN, Klein, S.**
  Bozeman, MT 59715 (US)
- **WHEATLEY, Charles, E., III**
  Del Mar, CA 92014 (US)

(74) Representative: **Walsh, Michael Joseph et al**
TOMKINS & CO.
5, Dartmouth Road
Dublin 6 (IE)

(56) References cited:
EP-A- 0 419 429
WO-A-92/10890
GB-A- 2 237 706
US-A- 5 347 535

- **1993 43RD IEEE VEHICULAR TECHNOLOGY CONFERENCE, May 1993, SECAUCUS,NJ,USA pages 611 - 616 MOGENSEN 'GSM Base-Station Antenna Diversity Using Soft Decision Combining on Up-link and Delayed-Signal Transmission on Down-link'**

Note: Within nine months from the publication of the mention of the grant of the European patent, any person may give notice to the European Patent Office of opposition to the European patent granted. Notice of opposition shall be filed in a written reasoned statement. It shall not be deemed to have been filed until the opposition fee has been paid. (Art. 99(1) European Patent Convention).

EP 0 667 068 B1

Printed by Jouve, 75001 PARIS (FR)

Description

BACKGROUND OF THE INVENTION

I. Field of the Invention

The present invention relates to communication systems, particularly indoor communication systems including cellular telephones, personal communication services (PCS), wireless private branch exchange (PBX) and wireless local loop telephone systems. More specifically, the present inventions relates to a novel and improved distributed antenna system for microcellular communication systems to facilitate indoor communications using spread spectrum signals.

II. Description of the Related Art

The use of code division multiple access (CDMA) modulation techniques is one of several techniques for facilitating communications in which a large number of system users are present. Other multiple access communication system techniques, such as frequency hopping spread spectrum, time division multiple access (TDMA), frequency division multiple access (FDMA) and amplitude modulation schemes such as amplitude companded single sideband (ACSSB) are known in the art. However the spread spectrum modulation technique of CDMA has significant advantages over these modulation techniques for multiple access communication systems. The use of CDMA techniques in a multiple access communication system is disclosed in US-A-4,901,307.

In the just mentioned patent, a multiple access technique is disclosed where a large number of mobile telephone system users each having a transceiver communicate through satellite repeaters or terrestrial base stations (also referred to as cell-sites stations, cell-sites, or for short, cells) using code division multiple access (CDMA) spread spectrum communication signals. In using CDMA communications, the frequency spectrum can be reused multiple times thus permitting an increase in system user capacity. The use of CDMA results in a much higher spectral efficiency than can be achieved using other multiple access techniques.

The terrestrial channel experiences signal fading that is characterized by Rayleigh fading. The Rayleigh fading characteristic in the terrestrial channel signal is caused by the signal being reflected from many different features of the physical environment. As a result, a signal arrives at a mobile unit receiver from many directions with different transmission delays. At the UHF frequency bands usually employed for mobile radio communications, including those of cellular mobile telephone systems, significant phase differences in signals traveling on different paths may occur. The possibility for destructive summation of the signals may result, with on occasion deep fades occurring.

Terrestrial channel fading is a very strong function of the physical position of the mobile unit. A small change in position of the mobile unit changes the physical delays of all the signal propagation paths, which further results in a different phase for each path. Thus, the motion of the mobile unit through the environment can result in a quite rapid fading process. For example, in the 850 MHz cellular radio frequency band, this fading can typically be as fast as one fade per second per mile per hour of vehicle speed. Fading this severe can be extremely disruptive to signals in the terrestrial channel resulting in poor communication quality. Additional transmitter power can be used to overcome the problem of fading. However, such power increases effect both the user by excessive power consumption, and the system by increased interference.

The direct sequence spread spectrum CDMA modulation techniques disclosed in US-A-4,901,307 offer many advantages over narrow band modulation techniques used in communication systems employing satellite or terrestrial repeaters. The terrestrial channel poses special problems to any communication system particularly with respect to multipath signals. The use of COMA techniques permit the special problems of the terrestrial channel to be overcome by mitigating the adverse effect of multipath, e.g. fading, while also exploiting the advantages thereof.

In a CDMA communication system, the same wideband frequency channel can be used for communication by all base stations. Typically a FDMA scheme is used where one frequency band is used for communications from the base stations to the remote or mobile stations (forward link) and another for communications from the remote or mobile stations to the base stations (reverse link). The CDMA waveform properties that provide processing gain are also used to discriminate between signals that occupy the same frequency band. Furthermore the high speed pseudonoise (PN) modulation allows many different propagation paths to be separated, provided the difference in path delays exceed the PN chip duration, i.e. 1/bandwidth. If a PN chip rate of approximately 1 MHz is employed in a CDMA system, the full spread spectrum processing gain, equal to the ratio of the spread bandwidth to system data rate, can be employed to discriminate against paths that differ by more than one microsecond in path delay from each other. A one microsecond path delay differential corresponds to differential path distance of approximately 1,000 feet (approximately 300 metres). The urban environment typically provides differential path delays in excess of one microsecond, and up to 10-20 microseconds are reported in some areas.

In narrow band modulation systems such as the analog FM modulation employed by conventional telephone systems, the existence of multiple paths results in severe multipath fading. With wideband CDMA modulation, however, the different paths may be discriminated against in the demodulation process. This discrimi-

nation greatly reduces the severity of multipath fading. Multipath fading is not totally eliminated in using CDMA discrimination techniques because there occasionally exists paths with delayed differentials of less than the PN chip duration for the particular system. Signals having path delays on this order cannot be discriminated against in the demodulator, resulting in some degree of fading.

It is therefore desirable in such communication systems that some form of diversity be provided which would permit a system to reduce fading. Diversity is one approach for mitigating the deleterious effects of fading. Three major types of diversity exist: time diversity, frequency diversity, and space diversity.

Time diversity can best be obtained by the use of repetition, time interleaving, and error detection and correction coding which is a form of repetition. The present invention employs each of these techniques as a form of time diversity.

CDMA by its inherent nature of being a wideband signal offers a form of frequency diversity by spreading the signal energy over a wide bandwidth. Therefore, frequency selective fading affects only a small part of the CDMA signal bandwidth.

Space or path diversity is obtained by providing multiple signal paths through simultaneous links from a mobile user through two or more base stations. Furthermore, path diversity may be obtained by exploiting the multipath environment through spread spectrum processing by allowing a signal arriving with different propagation delays to be received and processed separately. Examples of path diversity are illustrated in US-A-5,101,501 and US-A-5,109,390.

The deleterious effects of fading can be further controlled to a certain extent in a CDMA system by controlling transmitter power. A fade which decreases the power received by the base station from the mobile unit can be compensated for by increasing the power transmitted by the mobile station. The power control function operates in accordance with a time constant. Depending on the time constant of the power control loop and the length of time of a fade, the system may compensate for the fade by increasing the transmit power of the mobile unit. A system for base station and mobile unit power control is disclosed in US-A-5,056,109.

The existence of multipath can provide path diversity to a wideband PN CDMA system. If two or more paths are available with differential path delay greater than one chip duration two or more PN receivers can be employed to separately receive these signals at a single base station or mobile unit. Since these signals typically exhibit independence in multipath fading, i.e., they usually do not fade together, outputs of the two receivers can be diversity combined. Therefore a loss in performance occurs only when both receivers experience fades at the same time. Hence, one aspect of the present invention is the provision of two ore more PN receivers in combination with a diversity combiner. In order to exploit the existence of multipath signals, to overcome fading, it is necessary to utilize a waveform that permits path diversity combining operations to be performed.

A method and system for constructing PN sequences that provide orthogonality between the users so that mutual interference is reduced is disclosed in US-A-5,103,459. Using these techniques in reducing mutual interference allows higher user capacity and better link performance. With orthogonal PN codes, the cross-correlation is zero over a predetermined time interval, resulting in no interference between the orthogonal codes, provided only that the code time frames are time aligned with each other.

The above mentioned patents disclose a novel multiple access technique wherein a large number of mobile unit telephone system users communicate through satellite repeaters or terrestrial base stations using code division multiple access spread spectrum modulation that allows the spectrum to be used multiple times. The resulting system design has a much higher spectral efficiency than can be achieved using previous multiple access techniques.

In cellular telephone systems, a large geographic area is provided with mobile telephone service by installing a number of base stations, each positioned to cover a cell, and the set of cells situated so as to provide coverage of the entire geographic area. If service demand exceeds the capacity that can be provided by a set of base stations providing coverage over a certain area, the cells are subdivided into smaller cells and more base stations are added. This process has been carried out to the extent that some major metropolitan areas have nearly 400 base stations.

GB-A-2 237 706 describes a base station having two transmitting antennas which both transmit the same signal to a mobile station, the signal via one antenna being delayed by a time delay unit to ensure de-correlation between the transmitted signals. It is stated that multipath fading is unlikely to occur simultaneously in both signal paths to the single antenna of the mobile station wherein an equalizer, such as a Viterbi equalizer, decodes the originally transmitted signal from the two superimposed signals received by antenna. Diversity is obtained without the need for two antennas at the mobile station where space limitations would probably prevent this. The base station receives the signal transmitted from the single antenna at the mobile station over two signal paths respectively directed to the two antennas of the base station. The signals received are de-correlated by a time delay connected to one of these antennas and summed, and passed to an equalizer for decoding.

US-A-5,347,535 describes a CDMA communication system using a spreading code having a plurality of mobile stations and at least one base station. The mobile stations and the base station are provided with respective receiving sections, each of which has a path diversity function for reducing multipath fading. The

base station includes an array antenna having a plurality of integrated antenna elements spaced by a distance substantially equal to one to several wavelengths from each other so as to produce a space diversity effect. A plurality of delay devices are coupled with the respective antenna elements, for applying time delays to signals which pass through the respective antenna elements. The time delays are different from each other by a one symbol period of the spreading code or more.

In a further development of the cellular telephone idea, it is desired to provide a number of very small cells, called microcells, which would provide coverage of a very limited geographic area. Usually, it is considered that such areas are limited to a single floor of an office building and the mobile telephone service can be viewed as a cordless telephone system that may or may not be compatible with the mobile cellular telephone system. The rationale for providing such a service is similar to the reasoning for use of Private Branch Exchange (PBX) systems in business offices. Such systems provide for low cost phone service for a large number of calls between phones within the business while providing simplified dialing for internal phone numbers. A few lines are also provided to connect the PBX system to the public telephone system, allowing calls to be made and received between telephones in the PBX system and telephones located elsewhere. It is desirable for the microcell system to provide a similar level of service but with the added feature of cordless operation anywhere within the service area of the PBX.

In the indoor communication system environment, path delays are typically much shorter in duration than experienced in the outdoor communication system environment. In buildings and other indoor environments where indoor communication systems are used, it is necessary to provide a form of diversity which enables discrimination between multipath signals.

US-A-5,437,055 describes a system for mitigating the effect of fading in a digital communication system. The problem addressed is that deep signal nulls occur when signals from multiple paths are precisely aligned in amplitude and phase canceling the signal at the receiving antenna and creating a fade. In an indoor system, moving either transmitter or receiver a short distance can shift a fade away from the frequency of interest. The solution is a system which provides an actual or perceived movement of an antenna such that the effects of fading can be averaged over a time interval. The signal processing capability of modern digital transceivers can correct errors due to the time varying fades using the described system. Thus, a dual-antenna element using the described system can provide diversity receive and transmit paths to maintain capacity. It is stated that the described system may also provide improved capacity due to enhanced stability in power control.

The primary problem solved by the disclosed invention is the provision of a simple antenna system that provides high capacity, simple installation, good coverage and excellent performance. Another problem solved by the present invention is that it achieves the above coverage while maintaining compatibility with the mobile cellular system and while taking a negligible amount of capacity away from the mobile system. This is achieved in the disclosed invention by combining the capacity properties of CDMA with a new distributed antenna design that confines the radiation to a very limited and carefully controlled area.

The implementation of spread spectrum communication techniques, particularly CDMA techniques, in an indoor environment provides features which vastly enhance system reliability and capacity over other communication systems. CDMA techniques as previously mentioned further enable problems such as fading and interference to be readily overcome. Accordingly, CDMA techniques further promote greater frequency reuse, thus enabling a substantial increase in the number of system users.

SUMMARY OF THE INVENTION

The invention is defined by the features of claim 1, the characterizing features of which distinguish the invention from the teaching of GB-A-2 237 706. Further embodiments are defined in the dependent claims.

A key aspect in implementing an indoor communication system is the usage of the dual set of distributed antennas of the present invention. In this concept, two sets of antennas are fed by a common signal with only time delay processing to distinguish signals. The transmit output of the base station is fed to a string of antenna elements, for example with a coaxial cable. The antenna elements connect to the cable using power splitters. The resulting signals, amplified and frequency converted as necessary, are fed to the antennas. The salient features of this distributed antenna concept are as follows: (1) simple and inexpensive dual antenna node design; (2) neighboring antennas have time delays inserted in feed structure so signals received and transmitted from neighboring antennas are distinguishable by PN temporal processing; (3) exploitation of direct sequence CDMA's ability to discriminate against multipath; and (4) creation of deliberate multipath that satisfies discrimination criteria.

In the present invention, two sets of antenna cables are positioned in parallel thus creating a series of nodes comprised of two antenna elements. Signals transmitted from antennas of different antenna elements at a common node are provided different delay paths between the base station and the antenna. The antenna elements may comprise down conversion circuitry thus reducing the cabling path loss between the antenna elements and the base station and allowing the use of readily available SAW devices as delay elements.

Another advantage is that little site specific engineering is required for installation. Normally, antenna placement is determined only by physical constraints,

together with the requirement that every location desiring service must be covered by a set of two antennas. There is no concern for the overlapping of antenna patterns. In fact, overlapping coverage is desirable in that it provides diversity operation to all terminals in the overlap area. Overlap is, however, not required.

The advantages of the distributed antenna concept are dear when considering the inherent simplicity of the base station equipment required to support indoor communications of the type such as cellular telephone, PCS, wireless PBX, wireless local loop or wireless home extension telephone.

BRIEF DESCRIPTION OF THE DRAWINGS

The features, objects, and advantages of the present invention will become more apparent from the detailed description set forth below when taken in conjunction with the drawings:

Figure 1 is an illustration of an exemplary antenna pattern for a distributed antenna system of the present invention;
Figure 2 is a block diagram of a basic exemplary dual element distributed antenna system and base station interface;
Figure 3 is a block diagram of a basic exemplary E-structure element distributed antenna system alternative to Figure 2;
Figure 4 is a block diagram of an exemplary implementation of a remote or mobile unit transceiver;
Figure 5 is a block diagram of a basic exemplary dual element distributed antenna system with an alternative base station interface;
Figure 6 is a block diagram of an exemplary microcell base station;
Figure 7 is a block diagram of a dual element distributed antenna system using an active element structure;
Figure 8 is an alternative block diagram of a dual element distributed antenna system using an active element structure;
Figure 9 is a block diagram of a basic exemplary dual element distributed antenna system comprised of three parallel arrays of antennas;
Figure 10 is a block diagram of an exemplary placement of a dual element distributed antenna system comprising a plurality of parallel arrays; and
Figure 11 is a block diagram of a dual element distributed antenna system comprising two parallel arrays of antennas and comprising a base station having multiple independent receivers.

DETAILED DESCRIPTION OF THE PREFERRED EMBODIMENTS

A single set of antennas and delay elements provides the most basic implementation of the distributed antenna function. Details of the single set of antennas are disclosed in U.S-A-5,280,472 as mentioned above. However a system employing a single set of antennas can experience service quality reductions that can be alleviated by a dual set of antennas. A CDMA system, to achieve high capacity, uses a strict power control mechanism. Each mobile unit transmits enough power to communicate with the antenna with the lowest path loss to the mobile unit. Communications with all other antennas thus have less than optimal energy.

The effects of multipath fading may cause a momentary degradation of service if a mobile unit is positioned in dose proximity to a first antenna and positioned at some great distance from other antennas. Under this condition the mobile unit transmits enough power to communicate with the first antenna but not enough power to communicate reliably with the distant antennas. If under this condition the mobile unit were to abruptly experience a severe multipath fade with respect to the first antenna, the reduced signal level at the first antenna and the low signal level at the distant antennas may cause a degradation in service. Communication between the base station and the mobile unit would be sub-optimal until the power control loop increased the transmit power from the mobile unit or until the mobile unit moved to alleviate the multipath fading.

The sub-optimal performance created as described above can be mitigated by placing two antennas at each node. Thus, as opposed to evenly distributing single antennas, the mobile unit in general has similar distance, and hence path loss, between pairs of collocated antennas. If the mobile unit is positioned in dose proximity to a pair of collocated antennas and positioned at some great distance from other antennas and the mobile unit abruptly experiences a severe multipath fade with respect to one of the collocated antennas, the second collocated antenna should have sufficient signal level to maintain communication with the mobile unit without degradation.

To obtain maximum benefit from the present invention, the collocated antennas should exhibit an independence in fading meaning that the probability that a severe fade would occur for both antennas at the same mobile unit location is small. To achieve independent fading, a degree of diversity between the collocated antennas is required.

One way to achieve diversity in collocated antennas is to place the antennas some distance apart. The distance should allow the two antennas to have substantially the same coverage area while being spaced apart enough to provide independent fading. Placing two antennas at one base station to obtain diversity is common practice in macrocellular systems. In a macrocellular system, two antennas having relatively large coverage areas, generally on the order of several miles, are placed at one base station.

Typically the antennas are placed about 10 to 20 wavelengths (about 6 to 12 feet at the most common

frequency used for cellular communications) apart to obtain path diversity and thus independence in fading.

A second method to achieve diversity in collocated antennas is to provide each antenna of a set of collocated antennas with a different polarization, such as vertical and horizontal polarization. A standard indoor environment is bounded in three dimensions. A mobile unit within the three dimensional structure has a variety of signal paths to/from a fixed antenna involving multiple reflections from the surfaces of the structure. Depending on the angles involved, each reflection of a signal may rotate the polarization of the reflected signal. Therefore two signals having different polarization reflecting from the same set of surfaces form two signal paths having different phase characteristics. Because the signals have different phase characteristics, they also have different fading characteristics. Due to this process, two collocated antennas where the antennas have two different polarizations possess a high degree of independence in fading even if the antennas are placed very dose to one another.

Figure 1 provides an illustration of an exemplary antenna pattern for a dual set of antennas configured in accordance with the present invention. The antenna pattern, as illustrated in Figure 1, is generated by two series of omnidirectional antennas. Each set of antennas (30 A-J and 35 A-J) defines an antenna pattern 40A - 40J that is preferably overlapping with the pattern of neighboring antennas. For example, antennas 30A and 35A define the antenna pattern 40A. Neighboring antennas refer to antennas having overlapping or contiguous antenna patterns which are not collocated antennas at a common node. The overlapping of patterns provides continuous antenna coverage for the desired area. The two sets of antennas are coupled in series in an exemplary manner. The first set of antennas is coupled as indicated by line 10. The second set of antennas is coupled as indicated by line 20. The second set of antennas is approximately in parallel with the first set of antennas such that each antenna of the first set is collocated with an antenna of the second set.

As mentioned previously, control of signal power is an important aspect of a CDMA telephone system in order to realize high user capacity. A conventional omnidirectional antenna radiates a signal roughly equal in all directions. The signal strength is reduced with radial distance from the antenna according to the propagation characteristics of the physical environment. The propagation characteristics may vary from inverse second power to inverse 5.5 power law of the radial distance between the mobile unit and the fixed antennas.

A base station that is designed to serve a certain radius must transmit at a sufficient power level so that a mobile unit at the edge of the cell covered by the base station receives an adequate signal power level. Mobile units that are doser than the edge of the cell receive a greater than adequate signal level. Directional antenna beams can be formed using a variety of techniques known in the art. However, the forming of directional beams cannot alter the propagation law. Coverage of a desired area by a signal can be obtained by a combination of antenna pattern, antenna placement, and transmitter power.

The use of a distributed antenna system provides the desired antenna pattern, such as coverage of a hallway of a building, where each antenna element provides limited coverage. In providing limited antenna coverage the power necessary to reach a mobile unit within the smaller coverage area is correspondingly reduced since propagation loss is reduced.

However, there is a problem with multiple antennas all radiating the same signal. There may be areas, particularly near points equidistant from two or more of the antennas where signals may be received from the two antennas that cancel each other. Points where the signal may cancel are separated by approximately one-half wavelength. At 850 MHz this is equal to 17.6 cm or about 7 inches. If two signals arrive at the receive antenna at equal strength but opposite in phase, then they may so cancel. Essentially, this is man-made multipath fading. As with natural multipath fading, diversity is the best method for mitigation of fading. The CDMA system design provides several methods of diversity for mitigation of multipath fading.

The above mentioned patents disdose a cellular telephone system that uses a CDMA modulation with a 1.25MHz bandwidth, multiple forms of diversity, and very careful transmitter power control. One method of exploiting diversity is the provision of a "rake" receiver architecture in which multiple receivers are provided, each capable of receiving a signal that has traveled a different path and therefore exhibits a different delay. Induded is a separate searcher receiver which continuously scans the time domain looking for the best paths and assigning the multiple data receivers accordingly.

Another method of diversity is path diversity. In path diversity, the signal is radiated from multiple antennas, providing more than one propagation path. If two or more antennas can provide acceptable communication paths to the mobile unit receiver then fading mitigation through path diversity can be obtained.

In the microcell system it is desired to provide multiple antennas in order to provide coverage in a desired coverage area but the capacity demand for the system does not require that each antenna be supplied with a separate set of signals as in the conventional cellular system. Instead, to minimize the cost and complexity of the system, it is desired to feed some or all of the antennas in the microcell system with the same RF signals. In areas of the microcell system where good paths are possible to two or more of the antennas then path diversity can be obtained.

What is desired is a simple, low cost way to distinguish the signals feeding the different antennas without adding significantly to the complexity of the system. The method for so doing in the present invention is the ad-

dition of delay elements in the feeder lines between the base station transceiver and the antennas elements within an array of antennas.

Figure 2 illustrates an embodiment using a dual set of antennas with delay elements. Base station 100 provides signals to and accepts signals from the antenna array comprising node 200A - 200N. Analog transmitter 120 produces the RF signal for transmission by the distributed antenna array. The signal is split to form two signals to be transmitted by the parallel paths by splitter 160. The first transmit path is delayed by delay element 150 and then coupled to the first receive path by combiner 140 that may be replaced with a duplexer. The second transmit path is directly coupled to the second receive path by combiner 170 that may also be replaced with a duplexer. Combiner 180 sums the two receive paths, one of which has been delayed by delay element 155, and analog receiver 110 accepts the combined incoming RF signal for processing.

The combined receive and transmit signals are cabled via distribution cables 130 and 132 to first node 200A comprising two distribution elements 190. Each element 190 comprises coupler 192 for coupling a portion of the signal between antenna 196 and a respective distribution cable 130 or 132. Each element 190 also comprises delay element 194 for delaying signals and providing diversity from other antenna elements on distribution cable 130 or 132. Delay element 150 provides the diversity of signals of collocated antennas at a common node. Delay element 194 provides time diversity of signals from neighboring antennas. To retain complete time diversity of each neighboring antenna, the delay time of delay element 194 should be different than the delay time of delay element 150. An exemplary relationship in the delay period of delay elements 150 and 194 is such that the delay between the base station and every antenna in the system is different by at least one chip duration The difference in delay can be achieved by selecting the delay time of element 150 to be greater than the sum of the delays in a single path (e.g. the delay of element 150 is N times the delay of element 194). It can also be achieved by selecting the delay time of element 150 to be an appropriate submultiple of the delay of element 194 (e.g. the delay of element 150 is equal to one chip duration and the delay of element 194 is two chip durations). A second node 200B, containing like elements, is cascaded in series with first node 200A. The set of antennas continues in this manner for the length of the dual sets.

An alternative embodiment of Figure 2 is illustrated in Figure 3. Figure 3 has an E-structure while performing the same function as the parallel structure of Figure 2. Within base station 102, analog transmitter 240 and analog receiver 250 are coupled by combiner 260 to distribution cable 230. Each node in the E-structure comprises a first coupler 212 that couples signals between distribution cable 230 and antenna 218. A second coupler 214 couples signals between distribution cable 230 and second antenna 222 via delay element 220. Delay element 220 is used to provide time diversity at node 210A between antennas 218 and 222. A second delay element 216 is positioned in series with cable 230 and provides diversity between nodes, e.g. between nodes 201A and 210B. Components 212 - 222 can be rearranged within each node in a variety of fashions to perform the same basic function.

If the multiple antenna systems described above are provided with delay lines in the feeders such that the signal from each antenna is at least one chip duration delayed from its neighbors, then the multiple receiver architecture of the mobile units allows the signal from each antenna to be received separately and to be coherently combined in such a way that cancellation does not occur. In fact, fading due to other reflections in the environment can be greatly mitigated by the disclosed technique because a form of path diversity is provided.

The mobile units contain one or more data receivers and a searcher receiver. The searcher receiver scans the time domain determining what paths exist and which are the strongest paths. The available data receivers are then assigned to demodulate the signals traveling the strongest available paths. The base station receivers contain a similar capability.

Figure 4 illustrates in block diagram form an exemplary mobile unit CDMA telephone set. The mobile unit indudes an antenna 300 which is coupled through duplexer 302 to analog receiver 304 and transmit power amplifier 306.

Receiver 304 receives the RF frequency signals from duplexer 302 for amplification and frequency downconversion. The signals are also filtered and digitized for providing to digital data receivers 310A - 310N and searcher receiver 314. Further details of an exemplary embodiment of receivers 304, 310A - 310N and 314 are illustrated in the above-mentioned US-A-5,103,459 and 5,109,390.

Receiver 304 also performs a power control function for adjusting the transmit power of the mobile unit. Receiver 304 generates an analog power control signal that is provided to transmit power control circuitry 308.

The digitized signal at the output of analog receiver 304 may contain the signals of many on-going calls together with the pilot carriers transmitted by the current base station and all neighboring base station. The function of the receivers 310A - 310N are to correlate the samples with the proper PN sequence. This correlation process provides a property that is well-known in the art as "processing gain" which enhances the signal-to-interference ratio of a signal matching the proper PN sequence while not enhancing other signals. Correlation output is then synchronously detected using the pilot carrier from the closest base station as a carrier phase reference. The result of this detection process is a sequence of encoded data symbols.

A property of the PN sequence as used in the present invention is that discrimination is provided

against multipath signals. When the signal arrives at the mobile receiver after passing through more than one path, or in the present invention through more than one. antenna, there is a difference in the reception time of the signal. If this time difference exceeds one chip duration, then the correlation process discriminates between the signals. The data receiver can track and demodulate either of the earlier or later arriving signal. If two or more data receivers, typically three, are provided then multiple independent paths can be tracked and processed in parallel.

Searcher receiver 314, under control of control processor 316 is continuously scanning the time domain around the nominal time of a received pilot signal of the base station for other multipath pilot signals. Receiver 314 measures the strength of any reception of a desired waveform at times other than the nominal time. Receiver 314 compares signal strength in the received signals. Receiver 314 provides a signal strength signal to control processor 316 indicative of the strongest signals. Processor 316 provides control signals to data receivers 310A - 310N for each to process a different one of the strongest signals.

The outputs of receivers 310A - 310N are provided to diversity combiner and decoder circuitry 318. The diversity combiner circuitry contained within circuitry 318 adjusts the timing of the two streams of received symbols into alignment and adds them together. This addition process may be proceeded by multiplying the two streams by a number corresponding to the relative signal strengths of the two streams. This operation can be considered a maximal ratio diversity combiner. The resulting combined signal stream is then decoded using a forward error correction (FEC) decoder also contained within circuitry 318. The usual digital baseband equipment is a digital vocoder systerm. The CDMA system is designed to accommodate a variety of different vocoder designs.

Baseband circuitry 320 typically includes a digital vocoder (not shown) which may be a variable rate type. Baseband circuitry 320 further serves as an interface with a handset or any other type of peripheral device. Baseband circuitry 320 provides output information signals to the user in accordance with the information provided thereto from circuitry 318.

In the mobile unit-to-base station link (reverse link), user analog voice signals are typically provided through a handset as an input to baseband circuitry 320. Baseband circuitry 320 indudes an analog to digital (A/D) converter (not shown) which converts the analog signal to digital form. The digital signal is provided to the digital vocoder where it is encoded. The vocoder output is provided to a forward error correction (FEC) encoding circuit (not shown). In the exemplary embodiment the error correction encoding implemented is of a convolutional encoding scheme. The digitized encoded signal is output from baseband circuitry 320 to transmit modulator 322.

Transmit modulator 322 encodes the transmit data, which in the exemplary embodiment is a 64-ary orthogonal signaling technique based upon Walsh codes, and then modulates the encoded signal on a PN carrier signal whose PN sequence is common amongst all mobile units, but is of a different code phase offset assigned to the mobile station for the call. In the alternative the PN sequence may be chosen according to the assigned address function for the call. The PN sequence is determined by control processor 316 from call setup information that is transmitted by the base station and decoded by receivers 310A - 310N and control processor 316. Control processor 316 provides the PN sequence information to transmit modulator 322 and to receivers 310A - 310N for call decoding. As a further detail an outer PN code may be used upon the PN spread signal. Further details on data modulation are disclosed in US-A-5,103,459.

Transmit modulator 322 further converts the modulated signal to analog form for modulating upon an IF carrier. The IF signal output from transmit modulator 322 is provided to transmit power control circuitry 308. In circuitry 308 transmission signal power is controlled by the analog power control signal provided from receiver 304. Control bits transmitted by the microcell base station in the form of power adjustment commands are processed by data receivers 310A - 310N and provided to control processor 316. These power adjustment commands are used by control processor 316 in setting the power level in mobile unit transmission. In response to these commands, control processor 316 generates a digital power control signal that is provided to circuitry 308. Further information on the relationship of receivers 310A - 310N and 314, control processor 316 and transmit power control 308 with respect to power control is available in the above-mentioned US-A-5,056,109.

Transmit power control circuitry 308 outputs the power controlled modulated signal to transmit power amplifier circuitry 306. Circuitry 306 amplifies and converts the IF signal to an RF frequency. Circuitry 306 includes an amplifier which amplifies the power to a final output level. The intended transmission signal is output from circuitry 306 to duplexer 302. Duplexer 302 couples the signal to antenna 300 for transmission to the microcell base station.

The base station structure is similar to the mobile unit structure of Figure 4. The preferred embodiment of the base station described below contains elements corresponding to Figure 5 which illustrates an alternative base station structure embodiment of the structure of Figure 2. In Figure 5 the mobile unit signals received by the base station for each of the parallel paths are not combined at RF and instead are separately received and demodulated in the base station and coherently combined as digital bits. Separate demodulation of the two returning paths has several advantages including increased signal to interference ratios due to the coherent combining and less fluctuations in power control

both of which lead to high mobile unit-to-base station link capacity.

In Figure 5, the nodes and elements are identical to corresponding elements- in Figure 2. Base station 100' has a modified RF structure as shown in Figure 5. Additional analog receiver 115 functions independently of analog receiver 110 with each coupled to different demodulators as further illustrated in Figure 6. Combiner 180 and delay element 155 of Figure 2 have been eliminated since there is no need for these components in this particular embodiment.

Figure 6 illustrates in block diagram form the exemplary embodiment of a microcell base station. In Figure 6, the receiver system is comprised of analog receiver 110 and optional analog receiver 115 corresponding to like components of Figures 2 and 5. The receiver system is further comprised of independent searcher receiver 500 and digital data receivers 510A - 510N associated with analog receiver 110; independent searcher receiver 515 and digital data receivers 520A - 520N associated with analog receiver 115; and diversity and combiner & decoder circuitry 530. It should be noted that for the antenna implementation of Figure 2 the base station need not include searcher receiver 515, digital data receivers 520A - 520N, and analog receiver 115 The receiver system may also include associated with each analog receiver 110 and 115 any number of digital data receivers. It should be understood that as few as one digital data receiver (e.g. data receiver 510A) associated with each analog receiver may be employed. However in order to take full advantage of the functionality of a rake receiver it is preferred that two or more data receivers, e.g. typically three or four, be employed for each antenna system. Further details of an exemplary embodiment are provided in US-A-5,103,459 and 5,109,390.

As illustrated in Figure 5 analog receivers 110 and 115 respectively output a digitized version of the composite signal formed from the transmissions of one or more mobile units. Searcher receivers 500 and 515 each track the multipath propagations of an individual mobile unit's transmissions. Data receivers 510A - 510N and 520A - 520N each are assigned to demodulate a particular multipath propagation of the modulated data signal to extract the encoded message data. The composite signal output from analog receivers 110 and 115 is also provided to other sets of searcher receivers and corresponding data receivers (not shown) which are identical in construction to searcher receivers 500 and 515 and data receivers 510A - 510N and 520A - 520N for tracking and demodulating signals transmitted by other mobile units.

The microcell base station of Figure 6 includes CDMA controller 540 which is coupled to data receivers 510A - 510N and 520A - 520N along with searcher receivers 500 and 515. CDMA controller 540 provides Walsh sequence and code assignment, signal processing, timing signal generation, power control and various other related functions.

Signals received on one of the sets of antennas are provided to analog receiver 110 and then to searcher receiver 500. Searcher receiver 500 is used to scan the time domain about the received signal to ensure that digital data receivers 510A - 510N are tracking and processing the strongest available time domain signals associated with a particular mobile unit. Searcher receiver 500 provides corresponding signals to CDMA controller 540 which in response thereto generates and provides control signals to digital data receivers 510A - 510N for selecting the appropriate received signal for processing.

Signals received on the second of the set of distributed antennas, if used, are provided to analog receiver 115 and then to searcher receivers 520A - 520N. Searcher receivers 515 is also used to scan the time domain about the received signal to ensure that digital data receivers 520A - 520N are tracking and processing the strongest available time domain signals associated with a particular mobile unit. Searcher receiver 515 provides corresponding signals to CDMA controller 540 which in response thereto generates and provides control signals to digital data receivers 520A - 520N for selecting the appropriate received signal for processing. The output signals from receivers 510A - 510N and 520A - 520N are then processed for optimal performance by diversity combiner & decoder 530.

The signal processing in the base station data receivers and searcher receivers is different in several aspects than the signal processing by similar elements in the mobile unit. In the mobile unit-to-base station link (reverse link) unlike the base station-to- mobile unit link (forward link), the mobile unit does not transmit a pilot signal that can be used for coherent reference purposes in signal processing at the base station. The mobile unit-to-base station link is characterized by a non-coherent modulation and demodulation scheme using 64-ary orthogonal signaling.

Referring again to Figure 6, searcher receiver 500 and digital data receivers 510A - 510N receive the composite signal output from analog receiver 110. In order to decode the spread spectrum signals transmitted to the particular base station receiver through which a single mobile unit communicates, the proper PN sequences must be generated. Further details on the generation of the mobile unit signals are illustrated in US-A-5,103,459.

Each data receiver tracks the timing of the received signal it is receiving. This is accomplished by the well known technique of correlating the received signal by a slightly early local reference PN and correlating the received signal with a slightly late local reference PN. The difference between these two correlations averages to zero if there is no timing error. Conversely, if there is a timing error, then this difference will indicate the magnitude and sign of the error and the receiver's timing is adjusted accordingly.

Signals from an external or internal network, such as a private branch exchange (PBX), are coupled to the appropriate transmit modulator vocoder 555 under control of CDMA controller 540. Transmit modulator 535 which under control of CDMA controller 540 spread spectrum modulates the data for transmission to the intended recipient mobile unit. Transmit modulator 535 is assigned to encode and modulate data intended for transmission to the particular mobile unit for which search receivers 500 and 515 along with data receivers 510A - 510N and 520A - 520N are assigned. Transmit modulator 535 modulates the vocoder data with an orthogonal code selected from a set of orthogonal codes with the signal then modulated with a PN spreading code. The PN spread signal is then converted to analog form and provided to transmit power control circuitry 550.

Transmit power control circuitry 550 under the control of CDMA controller 540 controls the transmission power for the signal. The output of circuitry 550 is provided to summer 560 where it is summed with the output of transmit modulator/transmit power control circuits of other channel units. The output of summer 560 is provided to the analog transmit 120. Analog transmitter 120 amplifies the signal for output via the distributed antenna for radiating to the mobile units within the base station service area. Further details on exemplary transmitter circuitry of Figure 6 are illustrated in US-A-5,103,459.

Figure 6 further illustrates pilot/control channel generators and transmit power control circuitry 545. Circuitry 545 under control of CDMA controller 540 generates and controls the power of the pilot signal, the sync channel, and the paging channel for coupling to analog transmitter 120.

It is implicit in the previously described embodiments of the distributed antenna that most RF signal processing, including frequency conversion, amplification, and filtering is performed by the analog receiver and analog transmit circuitry within the base station. There are advantages however to moving these functions to the antenna elements of each node by creating an active antenna element.

Figure 7 illustrates an embodiment of the active elements. Base station 600 comprises analog receivers 605 and 635 which receive signals at an intermediate frequency (IF) from the array of distributed antennas or nodes 720A - 720N each comprised of a pair of active elements 705. In this particular arrangement analog receiver 605 receives signals along distribution cable 720 from a first set of active elements 705 while analog receiver 635 receives signals along distribution cable 725 from a second set of active elements 705. Analog transmitter 625 produces signals at an IF frequency that is split by splitter 630 into two signals for transmission by the parallel paths. Delay element 620 delays the transmit IF signal provided upon distribution cable 722 which is intended for a first one of the set of active elements 705 contained within nodes 720A - 720N. The corresponding non-delayed transmit IF signal from splitter 630 is provided upon distribution cable 722 to the second one of the set of active elements 705 contained within the nodes 720A - 720N.

Active elements 705 require both dc power and a frequency reference signal. These signals may be generated for individual active elements or the pair of active elements in the node. A preferred method of supplying these signals is to add them to the IF signals on distribution cables 720, 722, 725 and 727. Reference frequency sources 610 and 612 each produce a reference frequency signal which is used in a phase lock loop within the corresponding element. Preferably the reference frequency signal is within a different frequency band than the receive IF signal to facilitate ease of filtering at the base station and element. In the exemplary embodiment adders 640 and 642 add the reference frequency signals for transmission down cables 720 and 725. Likewise power supplies 615 and 617 supply dc power for the active elements via adders 645 and 647 and cables 722 and 727. It should be understood that the reference frequency signal and dc power may be provided on either the transmit or receive distribution cables, or other various arrangements, in accordance with the connection of elements in elements 705.

Each node of the distributed antenna is comprised of two active elements 705. Since all elements 705 are identical, except for the cables to which they are connected, only the function of a single element 705 connected to a pair distribution cables need be discussed. Element 705 receives the IF transmit signals on cable 722 and couples it through delay element 650 which provides time diversity between neighboring antennas. A portion of the IF transmit signal is coupled from the main path by coupler 655. The coupled signal is upconverted by mixer 690 for transmission at an appropriate RF frequency. The signal is coupled to antenna 700 via duplexer 695.

Antenna 700 also receives the signal transmitted by the mobile unit and couples the signal to the receive portion of the element via duplexer 695. The received signal is down converted to an IF signal by mixer 675 and coupled by coupler 660 to cable 720. The signals coupled by coupler 660 upon cable 720 is combined with the signals received by other node elements which are delayed by delay element 665. An actual implementation of the element may also comprise gain stages in the receive path, for example located between duplexer 695 and mixer 675, for noise figure considerations. Likewise the transmit path might also comprise gain stages to increase the level of the signal at the antenna. Also filter elements may be added to facilitate the signal processing

Mixers 675 and 690 within element 705 must be driven by local oscillator (LO) 685 at an appropriate frequency. In this embodiment the LOs are created within the element. LO 680 is a phase lock loop (PLL) that provides the driving LO for mixer 675 and LO 685 is a PLL

that provides the driving LO for mixer 690. The reference frequency is used to lock the PLL circuits to a common phase and is coupled from the receive path by low pass filter (LPF) 670 that low pass filters the signal on cable 720 to extract the reference frequency signal. Also dc power is coupled (not shown) from cable 722 for all active functions performed within the element. An alternate frequency plan may facilitate the use of a single LO.

The advantages of the active elements are numerous and the cost of the simple hardware is minimal. The active elements may be implemented with readily available mobile unit technology. The IF signal experiences less cable loss per foot of cable than the RF signal does and thus decreases the need for amplification. The delay elements are inexpensive at IF frequencies compared to RF frequencies. At IF the delay elements may be SAW filters that provide delay with little phase error across the signal bandwidth and provide filtering for unwanted signals. SAW filters cascade in series easily while higher frequency elements can require a high isolation to perform correctly.

The active element can also be implemented without the frequency conversion circuitry. Figure 8 illustrates an alternative embodiment of the active element distributed antenna. In Figure 8 the active amplification elements are added in the transmit and receive paths within the antenna element.

In Figure 8, base station 800 comprises analog receivers 805 and 835 which receive signals from the array of distributed antennas or nodes 920A - 920N each comprised of active elements 905. In this particular arrangement analog receiver 805 receives signals along distribution cable 920 from a first set of active elements 905 while analog receiver 835 receives signals along distribution cable 925 from a second set of active elements 905. Analog transmitter 825 produces a signal that is split by splitter 830 into two signals for transmission by the parallel paths. Delay element 820 delays the transmit signal provided upon distribution cable 922 which is intended for a first one of the set of active elements 905 contained within nodes 920A - 920N. The corresponding non-delayed transmit signal from splitter 830 is provided upon distribution cable 927 to the second one of the set of active elements 905 contained within the nodes 920A - 920N.

Again active elements 905 require dc power to operate. As discussed with reference to Figure 8, one method of supplying the signal is to add it to the signals on the distribution cables. Power supply 815 supplies dc power for the active elements as added to cable 922 by adder 845. Similarly, power supply 817 supplies dc power for the active elements as added to cable 927 by adder 847.

Each node of the distributed antenna is comprised of two active elements 905. Element 905 receives the transmit signal on cable 922 and couples it through delay element 750 which provides time diversity between neighboring nodes. A portion of the transmit signal is coupled from the main path by coupler 755. The coupled signal is amplified by amp 790 for transmission at an appropriate level. The signal is coupled to antenna 800 via duplexer 795.

Antenna 800 also receives the signal transmitted by the mobile unit and couples the signal to the receive portion of the element via duplexer 795. The received signal is amplified by low noise amplifier 775 and coupled by coupler 760 to the signals received by other element that have been delayed by delay element 765. An actual implementation of the element may also comprise filter elements to facilitate the signal processing. DC power is coupled (not shown) from cable 922 for all active functions performed within the element.

The active elements of Figure 8 may be used in an outdoor environment incorporating a distributed antenna. For instance, in downtown areas having tall buildings spaced closely together, a single antenna base station may not sufficiently provide consistent signal levels over the desired coverage area. An array of antennas could be used to cover problem areas. In such a scenario, the nodes of the distributed antennas would be placed in close proximity to each other and natural propagation paths may not provide the necessary delay time required for separate demodulation of the multipath signals. A distributed antenna of the present invention would be the ideal solution in such a scenario. The increased distance between nodes in an outdoor environment, and the subsequent higher power requirement for transmit and increase in cable loss for receive, would necessitate the use of active elements. In particular the configuration of Figure 8 is a realistic implementation of the system.

The present invention has been presented in the exemplary embodiments as nodes coupled in series to form an array. In the event of a node failure or a fault in the interconnect cabling, nodes located in the series connection beyond the failure or fault, with respect to the base station could be rendered useless in the antenna system. In order to overcome this potential drawback nodes may be coupled in parallel or series/parallel combination to provide continued coverage in the event of a node failure or interconnect cabling fault. A series/parallel combination of nodes is illustrated in Figure 9 which represents a modified embodiment of the exemplary embodiment of Figure 2. New elements 930, 932, 934, and 936, which do not correspond to elements in Figure 2, are shown external to base station 101. However these elements could function equivalently if incorporated within the base station New elements 930 and 934 are splitters which couple the two antenna arrays to base station 101. The first antenna arrav comprised of nodes 200A' - 200N' receives and supplies signals on distribution cables 130' and 132'. The second parallel antenna array comprised of nodes 200A" - 200N" receives and supplies signals on distribution cable 130" and 132" though added delay elements 932 and 936 respectively. The delay value of delay elements 932 and

936 is ideally chosen such that each antenna in the system exhibits a different delay with respect to the base station.

The topology presented in Figure 9 can take on a variety of alternative forms. The nodes and elements of Figure 9 could be replaced with the nodes and elements of Figure 3, 5, 7, or 8. Splitters 930 and 934 could couple more than two arrays to the base station. In fact in a model parallel topology, each node of the system could be independently connected to the base station The base station topology also could take on a variety of alternative embodiments. Base station 101 could be altered to contain analog receiver 115 making this topology similar to that of Figure 5.

The placement of antennas in a system comprising a series/parallel combination of nodes could take on a variety of forms. One placement topology is illustrated in Figure 10. Figure 10 comprises a base station and three parallel sets of series arrays. The topology of base station 940 is arbitrary in this example and could be a simple variation of any base station described herein. Each antenna node, 950A - 950N, 950A' - 950N', and 950A" - 950N", is a dual antenna node in accordance with the present invention. Antenna nodes 950A - 950N comprise the first array. Antenna nodes 950A' - 950N' comprise the second array. Antenna nodes 950A" - 950N" comprise the third array. Ideally every antenna node of Figure 10 has a different delay with respect to the base station. The placement of the antenna nodes in Figure 10 is illustrative of a distribution of antennas which would provide a good deal of protection against a fault. Instead of placing the second array after the first array and the third array after the second, the nodes of each array are interspersed with nodes of the other arrays. In this configuration, a fault in one array does not necessarily cause a complete lack of service at any point in the coverage area of the base station. Instead of creating a location where no service is provided, a fault condition produces a soft failure of the system that may lower the performance of the entire system

For high capacity areas, a parallel or series/parallel combination of nodes has additional advantages over the simple series connection of an entire array. A CDMA link is limited as to a maximum number of separate signals that it can efficiently combine in a given communication channel. If more than the maximum number of signals are present, the system capacity is exceeded and overall system quality is degraded. Once the signals have been summed together, as in the case of a single series of nodes, there is no way to separate the signals such that they can be sent to multiple receivers and individually demodulated. The base station circuitry needs to limit the number of signals that are transmitted to the mobile units within the range of its antennas. Each signal transmitted by the base station increases the noise level at every mobile unit which is not the intended destination of the signal. By using a parallel or series/parallel combination of nodes and a plurality of receivers and transmitters, the signal handling capability of a single base station can be increased.

To realize an increase in system capacity at a single base station, a system is designed in which there are at least two independent arrays. In this case, an independent array is defined as any set of nodes where each node has a different delay with respect to the base station and where each node in the system can belong to only one array. In this scheme there is no disadvantage to having two nodes with the same delay with respect to the base station as long as the two nodes belong to different independent arrays. The independent arrays are placed such that there is some area which is covered by only one independent array. Each independent array is supplied a transmit signal from a dedicated transmitter and supplies a receive signal to a dedicated receiver. When a mobile unit is positioned in the coverage area of only one of the independent arrays, the transmitter corresponding to the arrays to which the mobile is not communicating may stop transmitting signals for that mobile station and thus reduce the interference to the other mobile units. Likewise, when a mobile unit is positioned in the coverage area of only one of the independent arrays, the receivers corresponding to arrays to which the mobile is not communicating are free from interference from that mobile unit. When a mobile unit is positioned in the coverage area of two independent arrays, the two transmitters supply the same information signal to the mobile unit but each transmitter uses a different spreading sequence to modulate the information signal thereby increasing the total signal received at the mobile unit while decreasing the chance of destructive summation. Likewise when a mobile unit is positioned in the coverage area of two independent arrays, the two receivers can individually receive the signal and can then combine the energy from each path in the demodulation process to provide a total increased signal level. (This process is very similar to the process which is employed by base stations comprised of multiple sectors in a standard CDMA cellular system.) Note that the topology of Figure 9 comprising analog receiver 115 does not function to increase the capacity of the base station 101 since receiver 115 receives an input from each node of the two parallel arrays shown

An exemplary embodiment of this concept is shown in Figure 11 which is based upon the configuration of Figure 8. The first antenna array comprised of nodes 920A' - 920N' is coupled to analog transmitter 825 through cable 927', adder 847, and splitter 830. The first antenna array is also coupled to transmitter 825 through cable 922', adder 845, delay 820, and splitter 830. The second antenna array comprised of nodes 920A" - 920N" is coupled to analog transmitter 825" through cable 927", adder 847", and splitter 830". The second antenna array is also coupled to analog transmitter 835 through cable 922", adder 845", delay 820", and splitter 830".

Use of the dual sets of parallel antennas affords ad-

vantages to the system during general operation as well as reducing the worst case effects of multipath fading. The coherent combining of the separate paths within the base station increases the signal-to-noise ratio on the mobile unit-to-base station link. The use of the present invention also decreases power control fluctuations of the mobile unit. Both of these factors lead to higher capacity and improved system performance. The advantages of the collocated antennas are much greater than the advantages gained by merely uniformly placing twice as many antennas in series.

There are many obvious variations of the embodiments of Figures 2, 3, 5, 7, 8, 9, 10, and 11 including the simple rearrangement of components within each element. Actual implementation of these embodiments may require power splitting, gain, and filtering among other functions. The previous description of the preferred embodiments is provided to enable any person skilled in the art to make or use the present invention. The various modifications to these embodiments will be readily apparent to those skilled in the art, and the generic principles defined herein may be applied to other embodiments without the use of the inventive faculty.

Claims

1. A digital communication system in which at least one remote terminal communicates with other terminals through a base station using digitally modulated communication signals, said base station having an antenna system comprising:

   a set of antennas (30A-30J, 35A-35J);

   signal distribution means (10,20) for coupling said communication signals between said base station and the antennas of said set; and

   delay means (194) operatively coupled to said antennas of said set and said signal distribution means (10,20) for providing a predetermined delay in said communication signals coupled between said base station and said antennas;

   characterized in that

   said set of antennas comprises a first set of spaced apart antennas (30A-30J) and a second set of spaced apart antennas (35A-35J), each antenna of said second set of antennas positioned with a corresponding antenna of said first set of antennas (30A-30J);

   said signal distribution means comprises first signal distribution means (10) for coupling said communication signals between said base station and said antennas (30A-30J) of said first set and second signal distribution means (20) for coupling said communication signals between said base station and said antennas (35A-35J) of said second set; and

   said delay means comprises first delay means (194) operatively coupled to said antennas (30A-30J) of said first set and said first signal distribution means (10) for providing a predetermined delay in said communication signals coupled between said base station and said antennas (30A-30J) and second delay means (194) operatively coupled to said antennas (35A-35J) of said second set and said second signal distribution means (20) for providing a predetermined delay in said communication signals coupled between said base station and said antennas (35A-35J).

2. A digital communication system according to claim 1 characterized in that said antennas (30A-30J) of said first set have a predetermined antenna pattern with said antennas of said first set positioned with overlapping patterns.

3. A digital communication system according to claim 2 characterized in that said antennas (35A-35J) of said second set have a predetermined antenna pattern wherein each antenna of said second set is positioned with substantially overlapping patterns with said corresponding antenna (30A-30J) of said first set.

4. A digital communication system according to any one of the preceding claims characterized in that said remote terminal communicates with said terminals through said base station by transmitting spread spectrum modulated remote system user information signals to said base station for transfer to intended recipient terminals.

5. A digital communication system according to any one of the preceding claims characterized in that said communication signals are generated by spread spectrum modulating information signals according to predetermined pseudorandom noise (PN) spreading codes each comprised of a predetermined sequence of binary chips each of a predetermined chip duration, and in that said delay means (194) comprises a plurality of delay elements (194) disposed between adjacent coupled ones of said antennas (30A-30J) of said first set and between adjacent coupled ones of said antennas (35A-35J) of said second set, each delay element (194) providing a delay in said communication signals on an order of at least one chip duration.

6. A digital communication system according to any

one of the preceding claims characterized in that said signal distribution means comprises:

first transmission cabling (10) serially interconnecting said first set of antennas (30A-30J) and interconnecting a first one (30A) of said first set of antennas to said base station; and

second transmission cabling (20) serially interconnecting said second set of antennas (35A-35J) and interconnecting a first one (35A) of said second set of antennas to said base station.

7. A digital communication system according to any one of claims 1 to 5 characterized in that said signal distribution means comprises first transmission cabling (230) serially interconnecting said first set of antennas (218) and interconnecting a first one of said first set of antennas to said base station (102); and

each antenna (222) of said second set of antennas is operatively coupled to an antenna (218) of said first set of antennas.

8. A digital communication system according to claim 7 characterized in that said delay means comprises:

a first plurality of delay elements (220) each disposed between an antenna (222) of said second set of antennas and a corresponding antenna (218) of said first set of antennas, each delay element (220) providing a delay in said communication signals on an order of at least one chip duration; and

a second plurality of delay elements (216), each disposed between adjacent coupled ones of said antennas (218) of said first set of antennas, each delay element (216) providing a delay in said communication signals on an order of at least one chip duration.

9. A digital communication system according to any preceding claim characterized in that it comprises:

a third set of spaced apart antennas, each antenna of said third set of antennas positioned with a corresponding antenna of said first set of antennas;

signal distribution means for coupling said communication signals between said base station and said antennas of said third set of antennas; and

delay means operatively coupled to said antennas of said third set and said signal distribution means for providing a predetermined delay in said communication signals coupled between said base station and said antennas.

10. A digital communication system according to claim 9 characterized in that said signal distribution means comprises third transmission cabling serially interconnecting said third set of antennas and interconnecting a first one of said third set of antennas to said base station.

11. A digital communication system according to any preceding claim characterized in that said base station comprises:

communication terminal means for spread spectrum modulating a remote user directed information signal and providing a spread spectrum modulated remote user directed information signal to said sets of spaced apart antennas (30A-30J, 35A-35J) via said distribution means (10, 20) and said delay means (194) respectively, and for receiving from each said set of spaced apart antennas (30A-30J, 35A-35J) and separately demodulating a respective aggregate spread spectrum modulated remote system user information signal;

each said set of antennas (30A-30J, 35A-35J) in operation receiving a plurality of spread spectrum modulated remote system user information signals, each of said spread spectrum modulated remote system user information signals of a predetermined time delay with respect to one another, combining said plurality of spread spectrum modulated remote system user information signals to form a respective aggregate spread spectrum modulated remote system user information signal and providing said aggregate spread spectrum modulated remote system user information signals to said communication terminal means.

12. A digital communication system according to any of claims 1 to 5 characterized in that said signal distribution means comprises:

a primary antenna coupled to said base station; and

a plurality of secondary antennas electromagnetically coupled to said primary antenna, with each secondary antenna coupled to a corresponding one of said plurality of spaced apart antennas and respective one of said delay elements.

13. A digital communication system according to any

one of the preceding claims characterized in that said set (30A-30J, 35A-35J) of antennas comprises omnidirectional antennas.

14. A digital communication system according to any of claims 1 to 12 characterized in that said set (30A-30J, 35A-35J) of antennas comprises directional antennas.

15. A digital communication system according to claim 14 characterized in that at least one of said set (30A-30J, 35A-35J) of antennas is an omnidirectional antenna.

16. A digital communication system according to any of claims 1 to 12 characterized in that said set (30A-30J, 35A-35J) of antennas comprises polarized antennas.

17. A digital communication system according to claim 16 characterized in that said first set of spaced apart antennas (30A-30J) comprises vertically polarized antennas and said second set of spaced apart antennas (35A-35J) comprises horizontally polarized antennas.

18. A digital communication system according to claim 1 characterized in that the antenna system is comprised of a series of nodes (210A-210N) each node comprising:

a first directional coupler (212) having two pass through ports and a coupling port, a first one of said pass through ports coupled to a first external bi-directional port of said node;

a first antenna (218) which is an antenna of said first set (30A-30J) of spaced apart antennas coupled to said coupling port of said first directional coupler (212);

a second directional coupler (214) having two pass through ports and a coupling port, a first one of said pass through ports coupled to a second one of said pass through ports of said first directional coupler (212);

a first delay device (220) which is an element of said delay means having two ports, a first one of said two ports coupled to said coupling port of said second directional coupler (214);

a second antenna (222) which is an antenna of said second set of spaced apart antennas (35A-35J) coupled to a second one of said two ports of said first delay device (220); and

a second delay device (216) which is an element of said delay means having two ports, a first one of said two ports coupled to a second one of said two pass through ports of said second directional coupler (214) and a second one of said two ports providing a second external bi-directional port of said node.

19. A digital communication system according to claim 1 characterized in that the antenna system is comprised of a series of nodes (720A-720J), each node comprising:

a first and second active element (705), each of which comprises:

an antenna (700) of said first set (30A-30J) or said second set (35A-35J) having a bi-directional signal port;

a duplexer (695) having a combined port coupled to said bi-directional port of said antenna (700) and having a receive signal port and transmit signal port;

a first mixer (690) having an intermediate frequency (IF) input port, a radio frequency (RF) output port, and a local oscillator (LO) port, said RF output port coupled to said transmit signal port of said duplexer (695);

a first directional coupler (655) having two through ports and a coupled port, said coupled port coupled to said IF input port of said first mixer (690), a first of said two through ports providing a first external connection of said active element;

a first delay device (650) which is an element of said delay means having two ports, a first port coupled to a second of said two through ports of said first directional coupler (655) and a second port providing a second external connection of said active element;

a second mixer (675) having an intermediate frequency (IF) output port, a radio frequency (RF) input port, and a local oscillator (LO) port, said RF input port coupled to said receive signal port of said duplexer (695);

a second directional coupler (660) having two through ports and a coupled port, said coupled port coupled to said IF output port of said second mixer (675), a first of said two through ports providing a third external connection of said active element; and

a second delay device (665) which is an ele-

ment of said delay means having two ports, a first port coupled to a second port of said two through ports of said second directional coupler (660) and a second port providing a fourth external connection of said active element.

20. A digital communication system according to claim 19 characterized in that said first and second active element of each node further comprises:

a first LO generator (685) having a reference input port and a LO output port, said LO output port coupled to said LO port of said first mixer (690); and

a second LO generator (680) having a reference input port and a LO output port, said LO output port coupled to said LO port of said second mixer (675).

21. A digital communication system according to claim 20 characterized in that each of said reference input ports is coupled to one of said through ports of said first directional coupler (655).

22. A digital communication system according to claim 20 characterized in that each of said reference input ports is coupled to one of said through ports of said second directional coupler (660).

23. A digital communication system according to claim 20 characterized in that each of said reference input ports is coupled to one of said through ports of said second directional coupler (660) through said second delay device (665).

24. A digital communication system according to claim 20 characterized in that each of said reference input ports is coupled to one of said through ports of said first directional coupler (655) through said first delay device (650).

25. A digital communication system according to claim 20 characterized in that each of said reference input ports is coupled to one of said through ports of said first directional coupler (655) through a low pass filter (670).

26. A digital communication system according to any preceding claim characterized in that the spacing between an antenna of said first set (30A-30J) of spaced apart antennas and a corresponding antenna of said second set (35A-35J) is on the order 10 to 20 wavelengths of the radio frequency used for communication between the remote terminal and the base station.

Patentansprüche

1. Digitales Kommunikations- oder Nachrichtensystem bei dem mindestens ein entfernt gelegener Anschluß mit anderen Anschlüssen über eine Basisstation in Verbindung steht, und zwar unter Verwendung digital modulierter Kommunikations- oder Nachrichtensignale, wobei die Basisstation ein Antennensystem besitzt das folgendes aufweist:

einen Satz von Antennen (30A-30J, 35A-35J) : Signalverteilungsmittel (10, 20) zum Koppeln der Nachrichtensignale zwischen der Basisstation und den Antennen des Satzes; und Verzögerungsmittel (194) betriebsmäßig gekoppelt mit den Antennen des Satzes und den Signalverteilungsmitteln (10, 20) zum Vorsehen einer vorbestimmten Verzögerung in den Nachrichtensignalen gekoppelt zwischen der Basisstation und den Antennen;

dadurch gekennzeichnet,

daß der Satz von Antennen einen ersten Satz von beabstandeten Antennen (30A-30J) aufweist und einen zweiten Satz von beabstandeten Antennen (35A-35J), wobei jede Antenne des zweiten Satzes von Antennen mit einer entsprechenden Antenne des ersten Satzes von Antennen (30A-30J) positioniert ist;
daß die Signalverteilungsmittel erste Signalverteilungsmittel (10) aufweisen zum Koppeln der Nachrichtensignale zwischen der Basisstation und den Antennen (30A-30J) des ersten Satzes und zweite Signalverteilungsmittel (20) zum Koppeln der Nachrichtensignalen zwischen der Basisstation und den Antennen (35A-35J) des zweiten Satzes; und
daß die Verzögerungsmittel erste Verzögerungsmittel (194) aufweisen betriebsmäßig gekoppelt mit den Antennen (30A-30J) des ersten Satzes und den ersten Signalverteilungsmitteln (10) zum Vorsehen einer vorbestimmten Verzögerung in den Nachrichtensignalen gekoppelt zwischen der Basisstation und den Antennen (30A-30J) und zweite Verzögerungsmittel (194) betriebsmäßig gekoppelt mit den Antennen (35A-35J) des zweiten Satzes und den zweiten Signalverteilungsmitteln (20) zum Vorsehen einer vorbestimmten Verzögerung in den Nachrichtensignalen gekoppelt zwischen der Basisstation und den Antennen (35A-35J).

2. Digitales Nachrichtensystem nach Anspruch 1, dadurch gekennzeichnet, daß die Antennen (30A-30J) des ersten Satzes ein vorbestimmtes Antennenmuster besitzen, wobei die Antennen des ersten Satzes mit überlappenden Mustern positioniert

sind.

3. Digitales Nachrichtensystem nach Anspruch 2, dadurch gekennzeichnet, daß die Antennen (35A-35J) des zweiten Satzes ein vorbestimmtes Antennenmuster besitzen, wobei jede Antenne des zweiten Satzes mit im wesentlichen überlappenden Mustern mit der entsprechenden Antenne (30A-30J) des ersten Satzes positioniert ist.

4. Digitales Nachrichtensystem nach einem der vorhergehenden Ansprüche, dadurch gekennzeichnet, daß der entfernte Anschluß mit den erwähnten Anschlüssen über die Basisstation in Verbindung steht, und zwar durch Übertragen spread spectrum modulierter (spreizspektrummodulierter) Signale mit Information eines entfernten Systembenutzers zur Basisstation zur Übertragung zu den beabsichtigten Empfangsanschlüssen.

5. Digitales Nachrichtensystem nach einem der vorhergehenden Ansprüchen, dadurch gekennzeichnet, daß die Nachrichtensignale durch spread-spectrum-modulierte Informationssignale erzeugt werden, und zwar entsprechend vorbestimmte pseudo-Zufallsrauschspreizcodes (pseudorandom noise (PN) spreading codes), wobei jedes eine vorbestimmte Sequenz von binären Chips aufweist jeweils von einer vorbestimmten Chipdauer, und ferner dadurch gekennzeichnet, daß die Verzögerungsmittel (194) eine Vielzahl von Verzögerungselementen (194) aufweisen, und zwar angeordnet zwischen benachbarten gekoppelten Antennen (30A-30J) des ersten Satzes und zwischen benachbarten gekoppelten Antennen der erwähnten Antennen (35A-35J) des zweiten Satzes, wobei jedes Verzögerungselement (194) eine Verzögerung in den Nachrichtensignalen vorsieht in einer Größenordnung von mindestens einer Chipdauer.

6. Digitales Nachrichtensystem nach einem der vorhergehenden Ansprüche, dadurch gekennzeichnet, daß die Signalverteilungsmittel folgendes aufweisen:

erste Übertragungskabelmittel (10) serienmäßig den ersten Satz von Antennen (30A-30J) verbindend und eine erste Antenne (30A) des ersten Satzes von Antennen mit der Basisstation verbindend; und
zweite Übertragungskabelmittel (20) serienmäßig den zweiten Satz von Antennen (35A-35J) verbindend und eine erste Antenne (35A) des zweiten Satzes von Antennen mit der Basisstation verbindend.

7. Digitales Nachrichtensystem nach einem der Ansprüche 1 bis 5, dadurch gekennzeichnet, daß die Signalverteilungsmittel folgendes aufweisen: erste Übertragungskabelmittel (230) zur serienmäßigen Verbindung des ersten Satzes von Antennen (218) und zur Verbindung einer ersten Antenne des ersten Satzes von Antennen mit der Basisstation (102); und

wobei jede Antenne (222) des zweiten Satzes von Antennen betriebsmäßig mit einer Antenne (218) des ersten Satzes von Antennen gekoppelt ist.

8. Digitales Nachrichtensystem nach Anspruch 7, dadurch gekennzeichnet, daß die Verzögerungsmittel folgendes aufweisen:

eine erste Vielzahl von Verzögerungselementen (220) jeweils angeordnet zwischen einer Antenne (222) des erwähnten zweiten Satzes von Antennen und eine entsprechende Antenne (218) des ersten Satzes von Antennen, wobei jedes Verzögerungselement (220) eine Verzögerung in den Nachrichtensignalen vorsieht, und zwar in einer Größenordnung von mindestens einer Chipdauer; und
eine zweite Vielzahl von Verzögerungselementen (216), deren jedes zwischen benachbarten gekoppelten Antennen der erwähnten Antennen (218) des ersten Satzes von Antennen angeordnet ist, wobei jedes Verzögerungselement (216) eine Verzögerung in den Nachrichtensignalen in einer Größenordnung von mindestens einer Chipdauer vorsieht.

9. Digitales Nachrichtensystem nach irgendeinem der vorhergehenden Ansprüche, dadurch gekennzeichnet, daß es folgendes aufweist: einen dritten Satz von beabstandeten Antennen, wobei jede Antenne des dritten Satzes von Antennen mit einer entsprechenden Antenne des ersten Satzes von Antennen positioniert ist;

Signalverteilungsmittel zum Koppeln der Nachrichten Signale zwischen der Basisstation und den erwähnten Antennen des dritten Satzes von Antennen; und
Verzögerungsmittel betriebsmäßig gekoppelt mit den Antennen des dritten Satzes und den Signalverteilungsmitteln zum Vorsehen einer vorbestimmten Verzögerung in den Nachrichtensignalen gekoppelt zwischen der Basisstation und den Antennen.

10. Digitales Nachrichtensystem nach Anspruch 9, dadurch gekennzeichnet, daß die Signalverteilungsmittel dritte Übertragungskabelmittel aufweisen, und zwar zur serienmäßigen Verbindung des dritten Satzes von Antennen und zum Verbinden der ersten Antenne des dritten Satzes von Antennen mit

der Basisstation.

11. Digitales Nachrichtensystem nach einem der vorhergehenden Ansprüche, dadurch gekennzeichnet, daß die Basisstation folgendes aufweist:

Verbindungsanschlußmittel zur Spreizspektrummodulation eines an einen entfernten Benutzer gerichteten Informationssignals und Vorsehen eines spread spectrum modulierten an den entfernten Benutzer gerichteten Informationssignals an die Sätze von beabstandeten Antennen(30A-30J, 35A-35J) über die Verteilungsmittel (10, 20) beziehungsweise die Verzögerungsmittel (194), und zum Empfang von jeder Antenne des Satzes von beabstandeten Antennen (30A-30J, 35A-35J) und zur gesonderten Demodulation eines entsprechenden zusammengeführten spread spectrum modulierten Informationssignals für den entfernten Systembenutzer; wobei
jede Antenne des Satzes von Antennen (30A-30J, 35A-35J) im Betrieb eine Vielzahl von spread-spectrum-modulierten Informationssignalen für den entfernten Systembenutzer empfängt, wobei jedes der spread spectrum modulierten Informationssignale des entfernten Systembenutzers eine vorbestimmte Zeitverzögerung bezüglich einander besitzt, Kombinieren der Vielzahl von spread spectrum moduliertren Informationssignalen für den entfernten Systembenutzer, Bildung eines entsprechenden zusammengefaßten spread spectrum modulierten Informationssignals für den entfernten Systembenutzer und Vorsehen der zusammengefaßten spread-spectrum-modulierten Informationssignale für den entfernten Systembenutzer zu den Nachrichtenanschlußmitteln.

12. Digitales Nachrichtensystem nach einem der Ansprüche 1 bis 5, dadurch gekennzeichnet, daß die Signalverteilungsmittel folgendes aufweisen:

eine Primärantenne gekoppelt mit der Basisstation; und
eine Vielzahl von Sekundärantennen die elektromagnetisch mit der Primärantenne gekoppelt sind, wobei jede Sekundärantenne mit einer entsprechenden Antenne der Vielzahl von beabstandeten Antennen und einem entsprechenden der Verzögerungselemente gekoppelt ist.

13. Digitales Nachrichtensystem nach einem der vorhergehenden Ansprüche, dadurch gekennzeichnet, daß der Satz (30A-30J, 35A-35J) der Antennen Einrichtungsantennen aufweist.

14. Digitales Nachrichtensystem nach einem der Ansprüche 1 bis 12, dadurch gekennzeichnet, daß der Satz (30A-30J, 35A-35J) von Antennen Richtantennen aufweist.

15. Digitales Nachrichtensystem nach Anspruch 14, dadurch gekennzeichnet, daß mindestens eine Antenne des Satzes (30A-30J, 35A-35J) von Antennen eine Allrichtungsantenne ist.

16. Digitales Nachrichtensystem nach einem der Ansprüche 1 bis 12, dadurch gekennzeichnet, daß der Satz (30A-30J, 35A-35J) von Antennen polarisierte Antennen aufweist.

17. Digitales Nachrichtensystem nach Anspruch 16, dadurch gekennzeichnet, daß der erste Satz von beabstandeten Antennen (30A-30J) vertikal polarisierte Antennen aufweist und daß der zweite Satz von beabstandeten Antennen (35A-35J) horizontal polarisierte Antennen aufweist.

18. Digitales Nachrichtensystem nach Anspruch 1, dadurch gekennzeichnet, daß das Antennensystem eine Reihe von Knoten (210A-210N) aufweist, wobei jeder Knoten folgendes aufweist:

einen ersten Richtungskoppler (212) mit zwei Durchlaufanschlüssen und einem Kopplungsanschluß, wobei der erste Durchlaufanschluß der Durschlaufanschlüsse mit einem ersten externen bi-direktionalen Anschluß des Knotens gekoppelt ist;
eine erste Antenne (218) die eine Antenne des ersten Satzes (30A-30J) der beabstandeten Antennen ist, und zwar gekoppelt mit dem Kopplungsanschluß des ersten Richtungskopplers (212);
einen zweiten Richtungskoppler (214) mit zwei Durchlaßanschlüssen und einem Kopplungsanschluß , wobei der erste der Durchlaßanschlüsse mit einem zweiten der Durchlaßanschlüsse des ersten Richtungskopplers (212) gekoppelt ist;
eine erste Verzögerungsvorrichtung (220) die ein Element der Verzögerungsmittel ist, und zwar mit zwei Anschlüssen, wobei der erste Anschluß der zwei Anschlüsse mit dem Kopplungsanschluß des zweiten Richtungskopplers (214) gekoppelt ist;
eine zweite Antenne (222) die eine Antenne des zweiten Satzes von beabstandeten Antennen (35A-35J) ist, und zwar gekoppelt mit einem zweiten Anschluß der zwei Anschlüsse der ersten Verzögerungsvorrichtung (220); und
eine zweite Verzögerungsvorrichtung (216) die ein Element der Verzögerungsmittel ist mit zwei Anschlüssen, wobei ein erster Anschluß der

zwei Anschlüsse gekoppelt ist mit einem zweiten der zwei Durchlaßanschlüsse des zweiten Richungskopplers (214) und wobei ein zweiter Anschluß der zwei Anschlüsse einen zweiten externen bi-direktionalen Anschluß des Knotens vorsieht.

19. Digitales Nachrichtensystem nach Anspruch 1, dadurch gekennzeichnet, daß das Antennensystem eine Reihe von Knoten (720A-720J) aufweist, wobei jeder Knoten folgendes aufweist:

ein erstes und zweites aktives Element (705), von denen jedes folgendes aufweist:
eine Antenne (700) des ersten Satzes (30A-30J) oder der erwähnte zweite Satz (35A-35J) besitzt einen bi-direktionalen Signalanschluß;
einen Duplexer (695) mit kombiniertem Anschluß gekoppelt mit dem bi-direktionalen Anschluß der Antenne (700) und mit einem Aufnahmesignalanschluß und einem Übertragungssignalanschluß;
einen ersten Mischer (690) mit einem Zwischenfrequenz(ZF)-Eingangsanschluß, einem Hochfrequenz(HF)-Ausgangsanschluß, und einen Überlagerungsoszillator(LO)-Anschluß, wobei der HF(RF)-Ausgangsanschluß mit dem Übertragungssignalanschluß des Duplexers (695) gekoppelt ist;
einen ersten Richtungskoppler (655) mit zwei Durchanschlüssen und einem gekoppelten Anschluß, wobei der gekoppelte Anschluß mit dem ZF(IF)-Eingangsanschluß des ersten Mischers (690) gekoppelt ist, und wobei ein erster der zwei Durchanschlüsse eine erste externe Verbindung des aktiven Elements vorsieht;
eine erste Verzögerungsvorrichtung (650) die ein Element der Verzögerungsmittel ist mit zwei Anschlüssen, wobei der erste Anschluß mit einem zweiten der zwei Durchanschlüsse des ersten Richtungskopplers (655) gekoppelt ist und ein zweiter Anschluß eine zweite externe Verbindung des aktiven Elements vorsieht;
einen zweiten Mischer (675) mit einem Zwischenfrequenz-(ZF; IF)-Ausgangsanschluß, einem Hochfrequenz (HF; RF)-Eingangsanschluß, und einem Überlagerungsoszillator (local oscillator=LO)-Anschluß, wobei der HF (RF)-Eingangsanschluß mit dem Empfangssignalanschluß des Duplexers (695) gekoppelt ist;
einen zweiten Richtungskoppler (660) mit zwei Durchanschlüssen und einem gekoppelten Anschluß, wobei der gekoppelte Anschluß mit dem (ZF; IF)-Ausgang des zweiten Mischers (675) gekoppelt ist, und wobei ein erste der zwei Durchanschlüsse eine dritte externe Verbindung des aktiven Elements vorsieht; und
eine zweite Verzögerungsvorrichtung (665) die ein Element der Verzögerungsmittel ist mit zwei Anschlüssen, wobei ein erster Anschluß mit einem zweiten Anschluß der zwei Durchanschlüsse des zweiten Richtungskopplers (660) gekoppelt ist, und wobei ein zweiter Anschluß eine vierte externe Verbindung des aktiven Elements vorsieht.

20. Digitales Nachrichtensystem nach Anspruch 19, dadurch gekennzeichnet, daß das erwähnte erste und zweite aktive Element jedes Knotens ferner folgendes aufweist:

einen ersten LO-Generator (685) mit einem Referenzeingangsanschluß und einem LO-Ausgangsanschluß, wobei der LO-Ausgangsanschluß gekoppelt ist mit dem LO-Anschluß des ersten Mischers (690); und
einen zweiten LO-Generator (680) mit einem Referenzeingangsanschluß und einem LO-Ausgangsanschluß, wobei der LO-Ausgangsanschluß mit dem LO-Anschluß des zweiten Mischers (675) gekoppelt ist.

21. Digitales Nachrichtensystem nach Anspruch 20, dadurch gekennzeichnet, daß jeder der Referenzeingangsanschlüsse mit einem der Durchanschlüsse des ersten Richtungskopplers (655) gekoppelt ist.

22. Digitales Nachrichtensystem nach Anspruch 20, dadurch gekennzeichnet, daß jeder der Referenz- oder Bezugseingangsanschlüsse mit einem der Durchanschlüsse des zweiten Richtungskopplers (660) gekoppelt ist.

23. Digitales Nachrichtensystem nach Anspruch 20, dadurch gekennzeichnet, daß jeder der Referenzeingangsanschlüsse mit einem der Durchanschlüsse des zweiten Richtungskopplers (660) gekoppelt ist, und zwar durch die erwähnte zweite Verzögerungsvorrichtung (665).

24. Digitales Nachrichtensystem nach Anspruch 20, dadurch gekennzeichnet, daß jeder der Referenzeingangsanschlüsse mit einem der Durchanschlüsse des ersten Richtungskopplers (655) gekoppelt ist, und zwar durch die erwähnte erste Verzögerungsvorrichtung (650).

25. Digitales Nachrichtensystem nach Anspruch 20, dadurch gekennzeichnet, daß jeder der Bezugseingangsanschlüsse mit einem der Durchanschlüsse des ersten Richtungskopplers (655) gekoppelt ist, und zwar durch einen Tiefpaßfilter (670).

26. Digitales Nachrichtensystem nach einem vorherge-

henden Anspruch, dadurch gekennzeichnet, daß der Abstand zwischen einer Antenne des ersten Satzes (30A-30J) von beabstandeten Antennen und eine entsprechende Antenne des zweiten Satzes (35A-35J) in der Größenordnung von 10 bis 20 Wellenlängen der Hochfrequenz liegt, die für die Verbindung zwischen dem entfernt gelegenen Anschluß und der Basisstation verwendet wird.

Revendications

1. Système de communication numérique dans lequel au moins un terminal éloigné communique avec d'autres terminaux par l'intermédiaire d'une station de base utilisant des signaux de communication modulés numériquement, la station de base comportant un système d'antenne comprenant :

   un ensemble d'antennes (30A-30J, 35A-35J) ;
   des moyens de distribution de signal (10, 20) pour coupler les signaux de communication entre la station de base et les antennes de l'ensemble ; et
   des moyens de retard (194) couplés opérativement aux antennes de l'ensemble et au moyen de distribution de signal (10, 20) pour fournir un retard prédéterminé dans les signaux de communication couplés entre la station de base et les antennes ;

   caractérisé en ce que :

   l'ensemble d'antennes comprend un premier ensemble d'antennes espacées (30A-30J) et un second ensemble d'antennes espacées (35A-35J), chaque antenne du second ensemble d'antennes étant positionnée avec une antenne correspondante du premier ensemble d'antennes (30A-30J) ;
   les moyens de distribution de signal comprennent un premier moyen de distribution de signal (10) pour coupler les signaux de communication entre la station de base et les antennes (30A-30J) du premier ensemble et un second moyen de distribution de signal (20) pour coupler les signaux de communication entre la station de base et les antennes (35A-35J) du second ensemble ; et
   les moyens de retard comprennent des premiers moyens de retard (194) couplés opérativement aux antennes (30A-30J) du premier ensemble et au premier moyen de distribution de signal (10) pour fournir un retard prédéterminé dans les signaux de communication couplés entre la station de base et les antennes (30A-30J) et des seconds moyens de retard (194) couplés opérativement aux antennes (35A-35J) du second ensemble et au second moyen de distribution de signal (20) pour fournir un retard prédéterminé dans les signaux de communication couplés entre la station de base et les antennes (35A-35J).

2. Système de communication numérique selon la revendication 1, caractérisé en ce que les antennes (30A-30J) du premier ensemble ont un diagramme d'antenne prédéterminé, les antennes du premier ensemble étant disposées avec des diagrammes en recouvrement.

3. Système de communication numérique selon la revendication 2, caractérisé en ce que les antennes (35A-35J) du second ensemble ont un diagramme d'antenne prédéterminé, chaque antenne du second ensemble étant positionnée avec des diagrammes sensiblement en recouvrement avec les antennes correspondantes (30A-30J) du premier ensemble.

4. Système de communication numérique selon l'une quelconque des revendications précédentes, caractérisé en ce que le terminal éloigné communique avec lesdits terminaux par l'intermédiaire de la station de base en émettant des signaux d'information d'utilisateur de système éloigné modulés en spectre large vers la station de base pour transfert vers des terminaux récepteurs visés.

5. Système de communication numérique selon l'une quelconque des revendications précédentes, caractérisé en ce que les signaux de communication sont produits par des signaux d'information à modulation à large spectre selon des codes d'élargissement prédéterminés à bruit pseudoaléatoire (PN) dont chacun est constitué d'une séquence prédéterminée d'éléments binaires ayant chacun une durée élémentaire prédéterminée, et en ce que les moyens de retard (194) comprennent une pluralité d'éléments de retard (194) disposés entre des antennes adjacentes couplées (30A-30J) du premier ensemble et entre des antennes adjacentes couplées (35A-35J) du second ensemble, chaque élément de retard (194) fournissant un retard dans lesdits signaux de communication par suite d'un ordre d'au moins une durée élémentaire.

6. Système de communication numérique selon l'une quelconque des revendications précédentes, caractérisé en ce que les moyens de distribution de signaux comprennent :

   un premier câblage de transmission (10) interconnectant en série le premier ensemble d'antennes (30A-30J) et interconnectant une première antenne (30A) du premier ensemble

d'antennes à la station de base ; et
un second câblage de transmission (20) interconnectant en série le second ensemble d'antennes (35A-35J) et interconnectant une première antenne (35A) du second ensemble d'antennes à la station de base.

7. Système de communication numérique selon l'une quelconque des revendications 1 à 5, caractérisé en ce que :

lesdits moyens de distribution de signaux comprennent un premier câblage de transmission (230) interconnectant en série le premier ensemble d'antennes (218) et interconnectant une première antenne du premier ensemble d'antennes à la station de base (102) ; et
chaque antenne (222) du second ensemble d'antennes est opérativement couplée à une antenne (218) du premier ensemble d'antennes.

8. Système de communication numérique selon la revendication 7, caractérisé en ce que les moyens de retard comprennent :

une première pluralité d'éléments de retard (220) dont chacun est disposé entre une antenne (222) du second ensemble d'antennes et une antenne correspondante (218) du premier ensemble d'antennes, chaque élément de retard (220) fournissant un retard dans les signaux de communication par suite d'un ordre d'au moins une durée élémentaire ; et
une seconde pluralité d'éléments de retard (216) dont chacun est disposé entre des antennes adjacentes couplées (218) du premier ensemble d'antennes, chaque élément de retard (216) fournissant un retard dans les signaux de communication par suite d'un ordre d'au moins une durée élémentaire.

9. Système de communication numérique selon l'une quelconque des revendications précédentes, caractérisé en ce qu'il comprend :

un troisième ensemble d'antennes espacées, chaque antenne du troisième ensemble d'antennes étant positionnée avec une antenne correspondante du premier ensemble d'antennes ;
des moyens de distribution de signal pour coupler les signaux de communication entre la station de base et les antennes du troisième ensemble d'antennes ; et
des moyens de retard opérativement couplés aux antennes du troisième ensemble et aux moyens de distribution pour fournir un retard prédéterminé dans les signaux de communication couplés entre la station de base et lesdites antennes.

10. Système de communication numérique selon la revendication 9, caractérisé en ce que les moyens de distribution de signaux comprennent un troisième câblage de transmission interconnectant en série le troisième ensemble d'antennes et interconnectant une première antenne du troisième ensemble d'antennes à la station de base.

11. Système de communication numérique selon l'une quelconque des revendications précédentes, caractérisé en ce que la station de base comprend :

des moyens de terminaux de communication pour moduler en large spectre un signal d'information dirigé vers un utilisateur éloigné et pour fournir un signal d'information modulé en large spectre et dirigé vers l'utilisateur éloigné aux ensembles d'antennes espacées (30A-30J, 35A-35J) par l'intermédiaire des moyens de distribution (10, 20) et desdits moyens de retard (194), respectivement, et pour recevoir à partir de chaque ensemble d'antennes espacées (30A-30J, 35A-35J) et démoduler séparément un signal global respectif d'information d'utilisateur du système éloigné modulé en large spectre ;
chaque ensemble d'antennes (30A-30J, 35A-35J) en fonctionnement recevant une pluralité de signaux d'information d'utilisateur du système éloigné modulé en spectre large, chacun des signaux d'information d'utilisateur du système éloigné modulé en spectre large ayant un retard prédéterminé par rapport aux autres, combinant la pluralité de signaux d'information d'utilisateur du système éloigné modulé en spectre large pour former un signal global respectif d'information d'utilisateur du système éloigné modulé en spectre large et fournissant les signaux globaux d'information d'utilisateur du système éloigné modulé en large spectre aux moyens de terminaux de communication.

12. Système de communication numérique selon l'une quelconque des revendications 1 à 5, caractérisé en ce que les moyens de distribution de signal comprennent :

une antenne primaire couplée à la station de base ; et
une pluralité d'antennes secondaires couplées électro-magnétiquement à l'antenne primaire, chaque antenne secondaire étant couplée à l'une correspondante de la pluralité d'antennes espacées et à l'un respectif des éléments de retard.

13. Système de communication numérique selon l'une quelconque des revendications précédentes, caractérisé en ce que ledit ensemble (30A-30J, 35A-35J) d'antennes comprend des antennes omnidirectionnelles.

14. Système de communication numérique selon l'une quelconque des revendications 1 à 12, caractérisé en ce que ledit ensemble (30A-30J, 35A-35J) d'antennes comprend des antennes directionnelles.

15. Système de communication numérique selon la revendication 14, caractérisé en ce qu'au moins une antenne dudit ensemble d'antennes (30A-30J, 35A-35J) est une antenne omnidirectionnelle.

16. Système de communication numérique selon l'une quelconque des revendications 1 à 12, caractérisé en ce que ledit ensemble (30A-30J, 35A-35J) d'antennes comprend des antennes polarisées.

17. Système de communication numérique selon la revendication 16, caractérisé en ce que le premier ensemble d'antennes espacées (30A-30J) comprend des antennes à polarisation verticale et le second ensemble d'antennes espacées (35A-35J) comprend des antennes à polarisation horizontale.

18. Système de communication numérique selon la revendication 1, caractérisé en ce que le système d'antenne est constitué d'une série de noeuds (210A-210N), chaque noeud comprenant :

un premier coupleur directionnel (212) ayant deux accès de passage et un accès de couplage, un premier accès de passage étant couplé à un premier accès bidirectionnel externe dudit noeud ;
une première antenne (218) qui est une antenne du premier ensemble (30A-30J) d'antennes espacées couplée à l'accès de couplage du premier coupleur directionnel (212) ;
un second coupleur bidirectionnel (214) ayant deux accès de passage et un accès de couplage, un premier des accès de passage étant couplé à un second des accès de passage du premier coupleur directionnel (212) ;
un premier dispositif de retard (220) qui est un élément desdits moyens de retard comportant deux accès, un premier des deux accès étant couplé à l'accès de couplage du second coupleur directionnel (214) ;
une seconde antenne (222) qui est une antenne du second ensemble d'antennes espacées (35A-35J) couplé à un second des deux accès du premier dispositif de retard (220) ; et
un second dispositif de retard (216) qui est un élément du moyen de retard ayant deux accès, un premier des deux accès étant couplé à un second des deux accès de passage du second coupleur directionnel (214) et un second des deux accès fournissant un second accès bidirectionnel externe dudit noeud.

19. Système de communication numérique selon la revendication 1, caractérisé en ce que le système d'antenne est constitué d'une série de noeuds (720A-720J), chaque noeud comprenant un premier et un second élément actif (705) dont chacun comprend :

une antenne (700) du premier ensemble (30A-30J) ou du second ensemble (35A-35J) ayant un accès de signal bidirectionnel ;
un duplexeur (695) comportant un accès combiné couplé audit accès bidirectionnel de l'antenne (700) et ayant un accès de réception de signal et un accès de transmission de signal ;
un premier mélangeur (690) ayant un accès d'entrée à fréquence intermédiaire (IF), un accès de sortie à radiofréquence (RF), et un accès d'oscillateur local (LO), l'accès de sortie RF étant couplé à l'accès de signal de transmission du duplexeur (695) ;
un premier coupleur directionnel (655) ayant deux accès de passage et un accès couplé, l'accès couplé étant couplé à l'accès d'entrée IF du premier mélangeur (690), un premier des deux accès de passage constituant une première connexion externe de l'élément actif ;
un premier dispositif de retard (650) qui est un élément du moyen de retard ayant deux accès, un premier accès couplé à un second des deux accès de passage du premier coupleur directionnel (655) et un second accès fournissant une seconde connexion externe de l'élément actif ;
un second mélangeur (675) ayant un accès de sortie à fréquence intermédiaire (IF), un accès d'entrée à radiofréquence (RF) et un accès d'oscillateur local (LO), l'accès d'entrée RF étant couplé à l'accès de signal de réception du duplexeur (695) ;
un second coupleur directionnel (660) ayant deux accès de passage et un accès couplé, l'accès couplé étant couplé à l'accès de sortie IF du second mélangeur (675), un premier des deux accès de passage constituant une troisième connexion externe de l'élément actif ; et
un second dispositif de retard (665) qui est un élément du moyen de retard ayant deux accès, un premier accès couplé à un second des deux accès de passage du second coupleur directionnel (660) et un second accès constituant une quatrième connexion externe de l'élément actif.

20. Système de communication numérique selon la revendication 19, caractérisé en ce que les premier et second éléments actifs de chaque noeud comprennent en outre :

un premier générateur LO (685) ayant un accès d'entrée de référence et un accès de sortie LO, l'accès de sortie LO étant couplé à l'accès LO du premier mélangeur (690) ; et
un second générateur LO (680) ayant un accès d'entrée de référence et un accès de sortie LO, l'accès de sortie LO étant couplé à l'accès LO du second mélangeur (675).

21. Système de communication numérique selon la revendication 20, caractérisé en ce que chacun des accès d'entrée de référence est couplé à l'un des accès de passage du premier coupleur bidirectionnel (655).

22. Système de communication numérique selon la revendication 20, caractérisé en ce que chacun des accès d'entrée de référence est couplé à l'un des accès de passage du second coupleur directionnel (660).

23. Système de communication numérique selon la revendication 20, caractérisé en ce que chacun des accès d'entrée de référence est couplé à l'un des accès de passage du second coupleur directionnel (660) par l'intermédiaire du second dispositif de retard (665).

24. Système de communication numérique selon la revendication 20, caractérisé en ce que chacun des accès d'entrée de référence est couplé à l'un des accès de passage du premier coupleur directionnel (655) par l'intermédiaire du premier dispositif de retard (650).

25. Système de communication numérique selon la revendication 20, caractérisé en ce que chacun des accès d'entrée de référence est couplé à l'un des accès de passage du premier coupleur directionnel (655) par l'intermédiaire d'un filtre passe-bas (670).

26. Système de communication numérique selon l'une quelconque des revendications précédentes, caractérisé en ce que l'écart entre une antenne du premier ensemble (30A-30J) d'antennes espacées et une antenne correspondante du second ensemble (35A-35J) est de l'ordre de 10 à 20 longueurs d'onde de la fréquence radio utilisée pour des communications entre le terminal éloigné et la station de base.

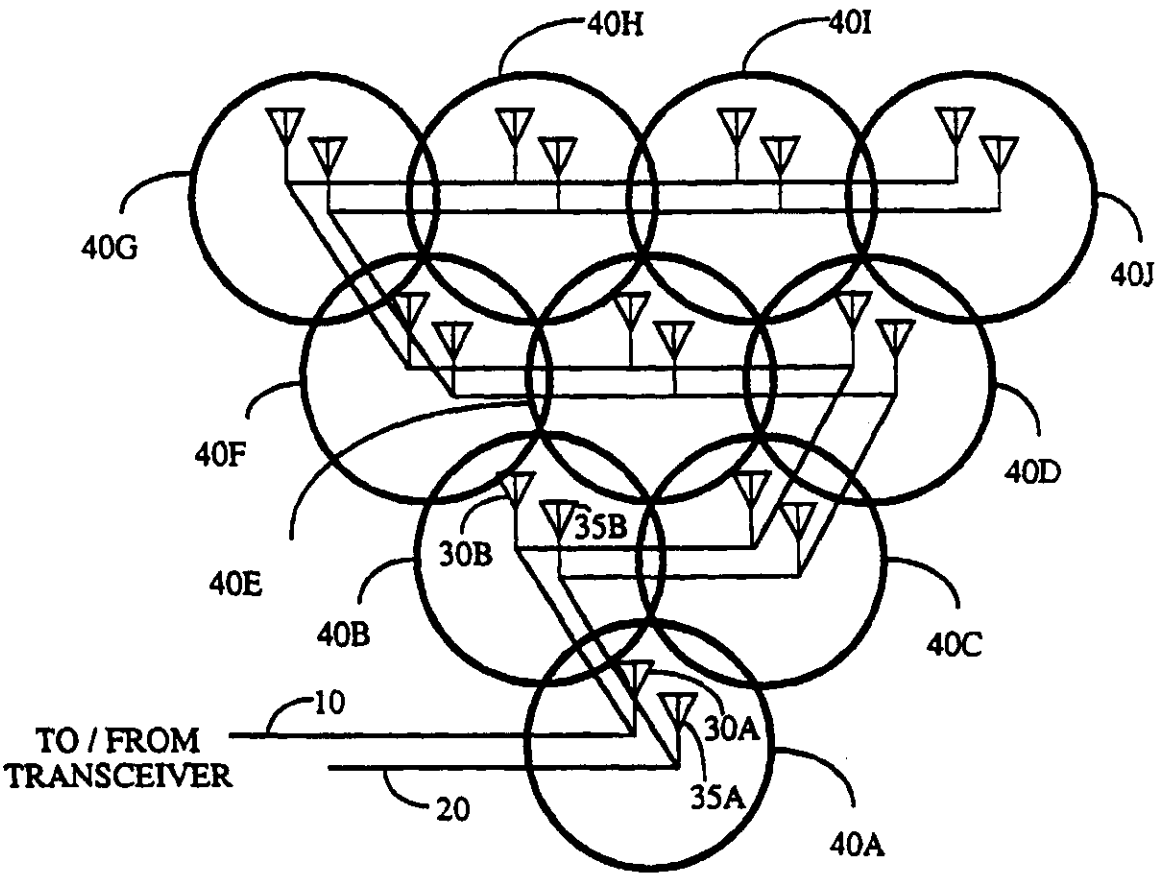
40H
40I
40G
40J
40F
40D
35B
30B
40E
40B
40C
10
TO / FROM
TRANSCEIVER
30A
35A
20
40A

FIG. 1

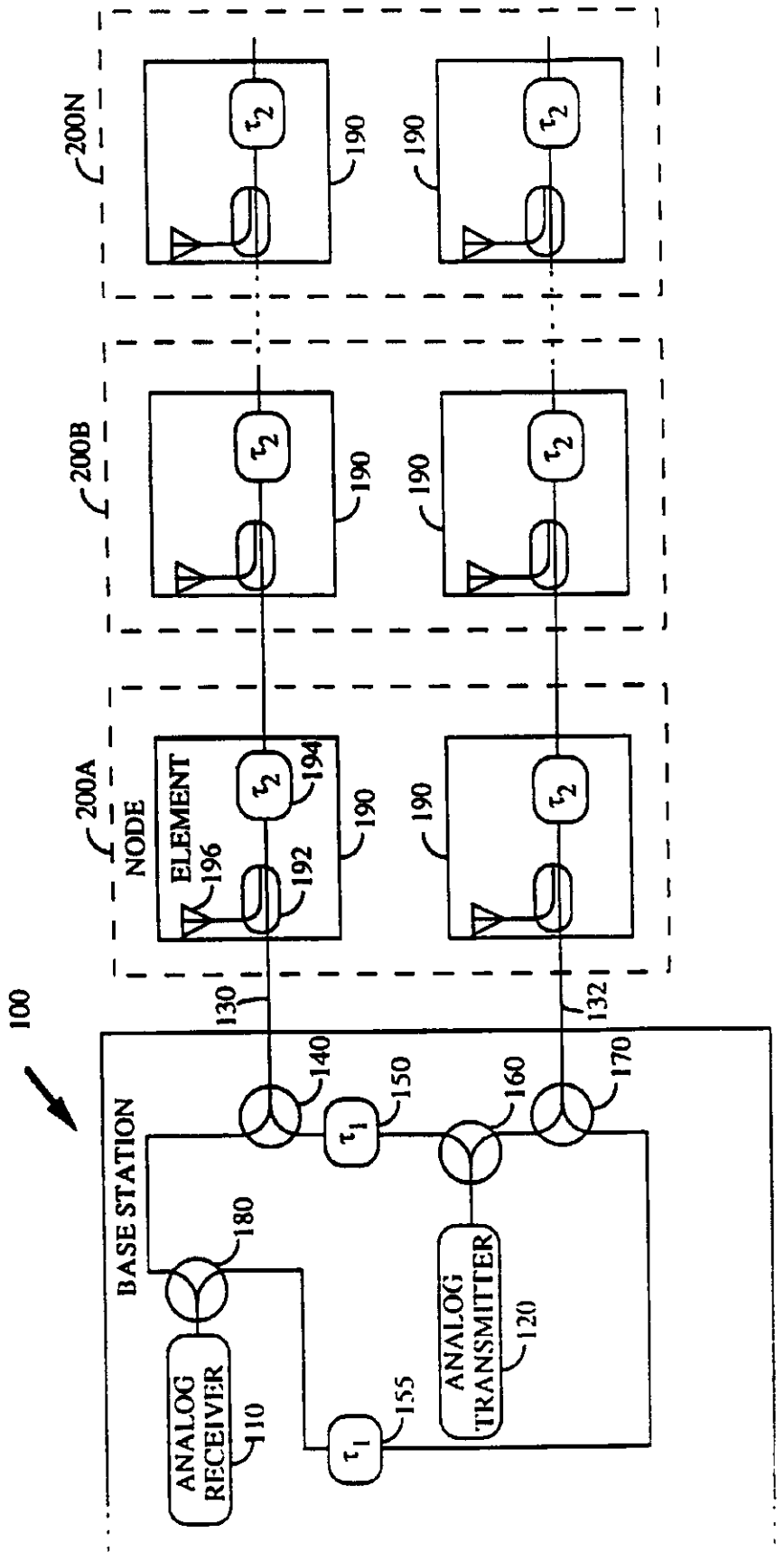
100
BASE STATION
ANALOG RECEIVER
110
ANALOG TRANSMITTER
120
130
132
140
150
155
160
170
180
200A
NODE
ELEMENT
192
194
196
200B
200N
190
τ_1
τ_2

FIG. 2

FIG. 3

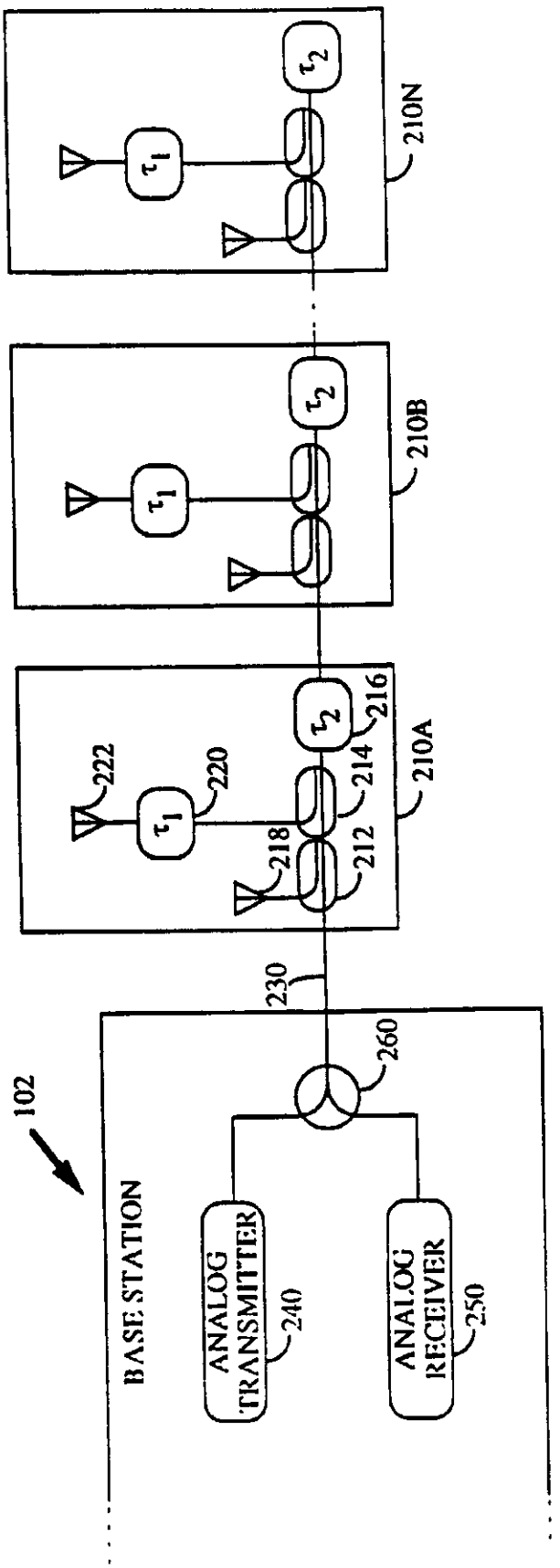
102
BASE STATION
ANALOG TRANSMITTER
240
ANALOG RECEIVER
250
260
230
210A
210B
210N
212
214
216
218
220
222
τ1
τ2

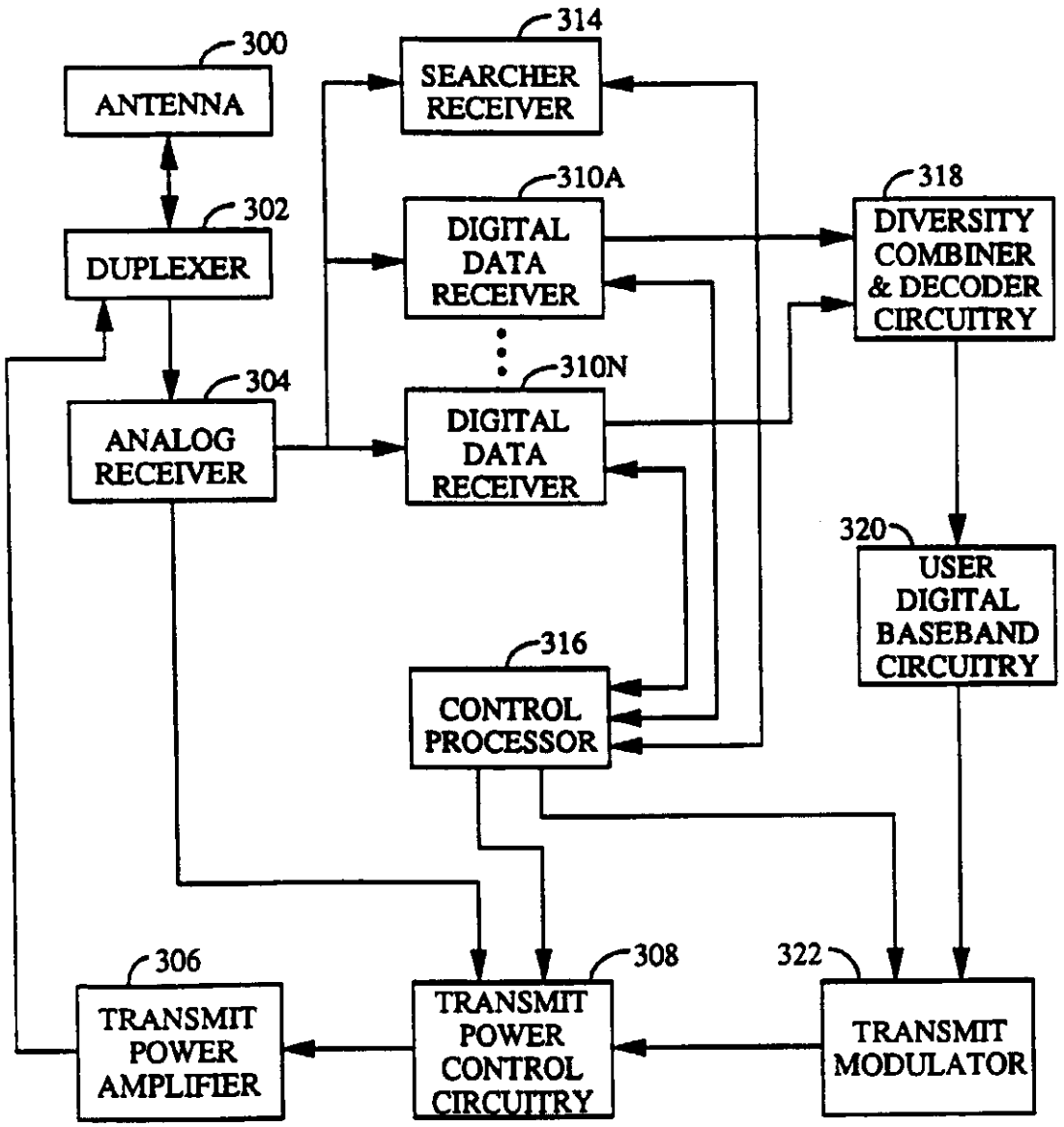
300
ANTENNA
302
DUPLEXER
304
ANALOG RECEIVER
314
SEARCHER RECEIVER
310A
DIGITAL DATA RECEIVER
310N
DIGITAL DATA RECEIVER
318
DIVERSITY COMBINER & DECODER CIRCUITRY
320
USER DIGITAL BASEBAND CIRCUITRY
316
CONTROL PROCESSOR
306
TRANSMIT POWER AMPLIFIER
308
TRANSMIT POWER CONTROL CIRCUITRY
322
TRANSMIT MODULATOR

FIG. 4

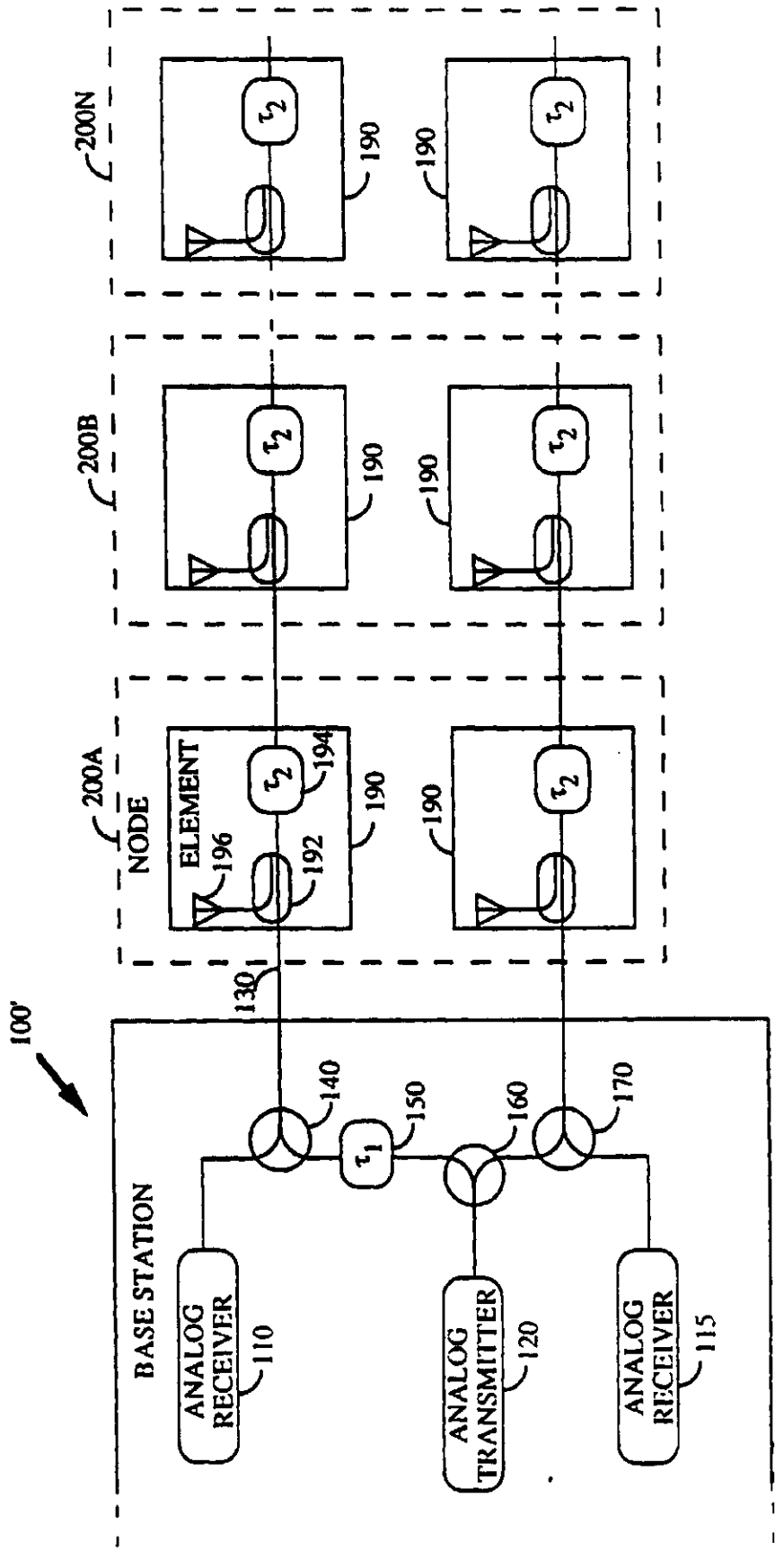
100'
BASE STATION
ANALOG RECEIVER
110
ANALOG TRANSMITTER
120
ANALOG RECEIVER
115
130
140
150
160
170
τ1
200A
NODE
ELEMENT
196
192
194
τ2
190
200B
200N

FIG. 5

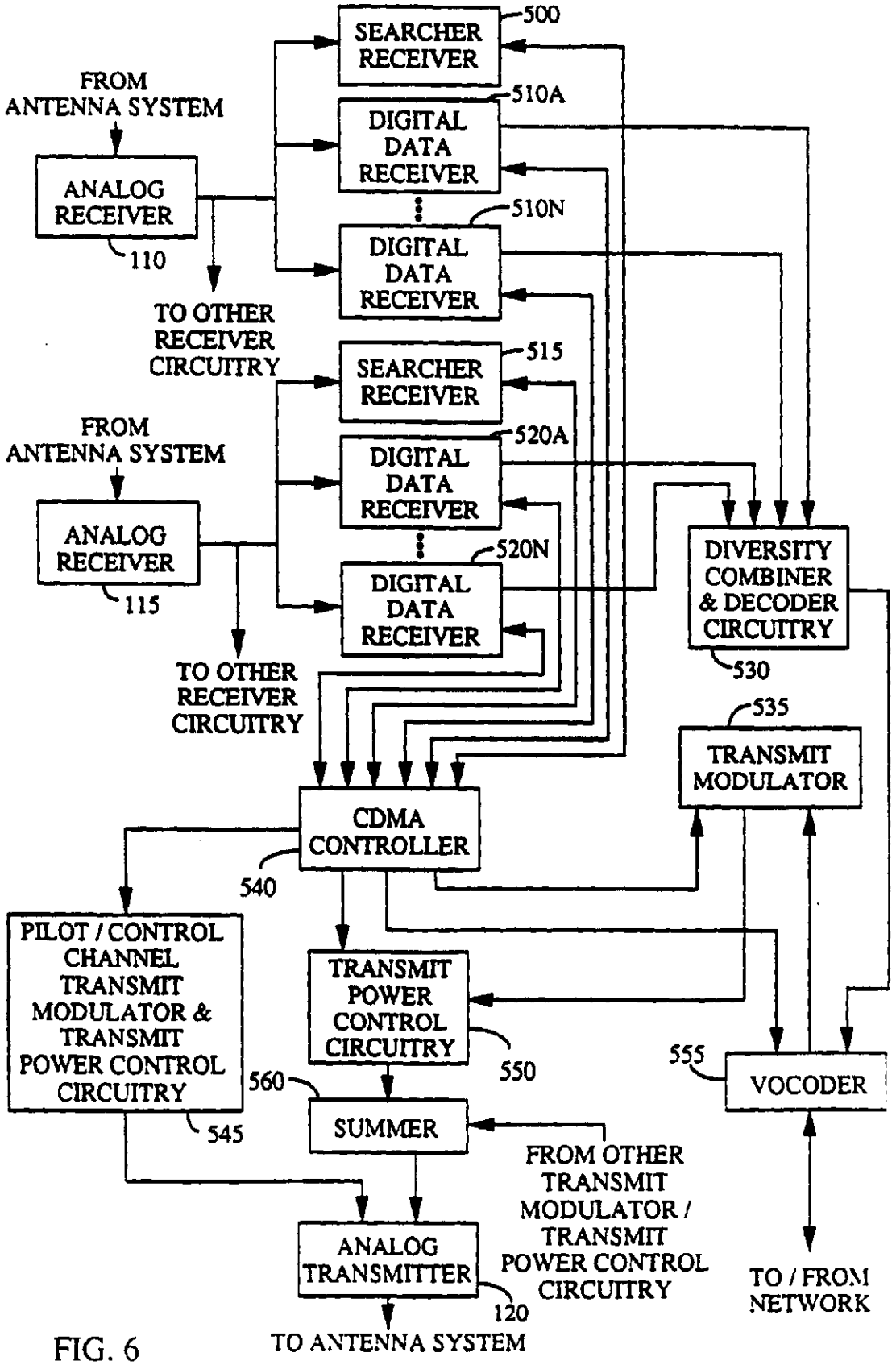
SEARCHER RECEIVER
500
FROM ANTENNA SYSTEM
DIGITAL DATA RECEIVER
510A
ANALOG RECEIVER
110
DIGITAL DATA RECEIVER
510N
TO OTHER RECEIVER CIRCUITRY
SEARCHER RECEIVER
515
FROM ANTENNA SYSTEM
DIGITAL DATA RECEIVER
520A
ANALOG RECEIVER
115
DIGITAL DATA RECEIVER
520N
DIVERSITY COMBINER & DECODER CIRCUITRY
530
TO OTHER RECEIVER CIRCUITRY
535
TRANSMIT MODULATOR
CDMA CONTROLLER
540
PILOT / CONTROL CHANNEL TRANSMIT MODULATOR & TRANSMIT POWER CONTROL CIRCUITRY
545
TRANSMIT POWER CONTROL CIRCUITRY
550
555
VOCODER
560
SUMMER
FROM OTHER TRANSMIT MODULATOR / TRANSMIT POWER CONTROL CIRCUITRY
ANALOG TRANSMITTER
120
TO / FROM NETWORK
TO ANTENNA SYSTEM

FIG. 6

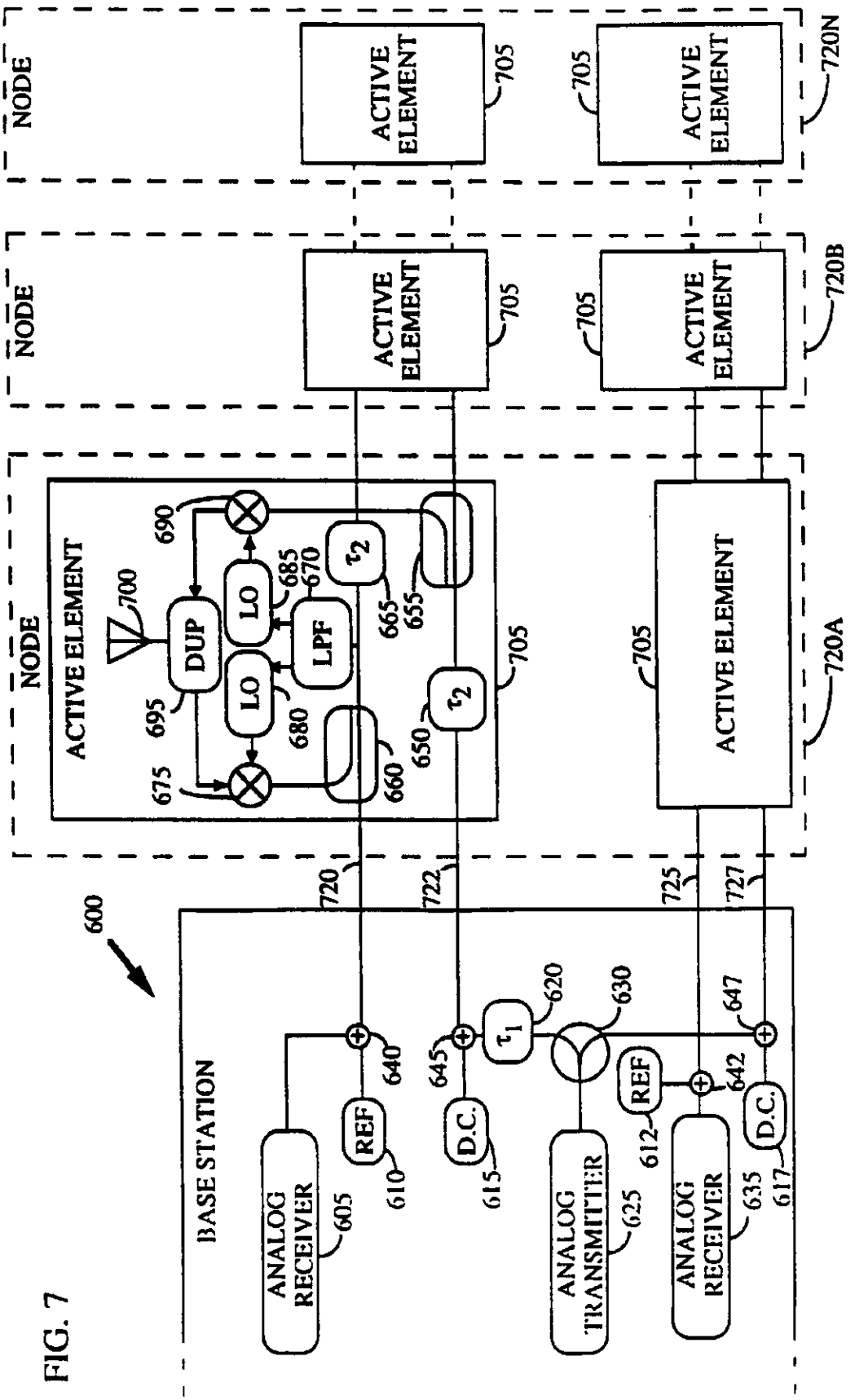
NODE
ACTIVE ELEMENT
705
720N
NODE
ACTIVE ELEMENT
705
720B
NODE
ACTIVE ELEMENT
700
DUP
LO
LO
LPF
690
685
670
695
680
675
660
665
655
650
τ_2
τ_2
705
ACTIVE ELEMENT
705
720A
720
722
725
727
600
BASE STATION
ANALOG RECEIVER
605
REF
610
640
D.C.
615
645
τ_1
620
630
ANALOG TRANSMITTER
625
REF
612
642
ANALOG RECEIVER
635
D.C.
617
647

FIG. 7

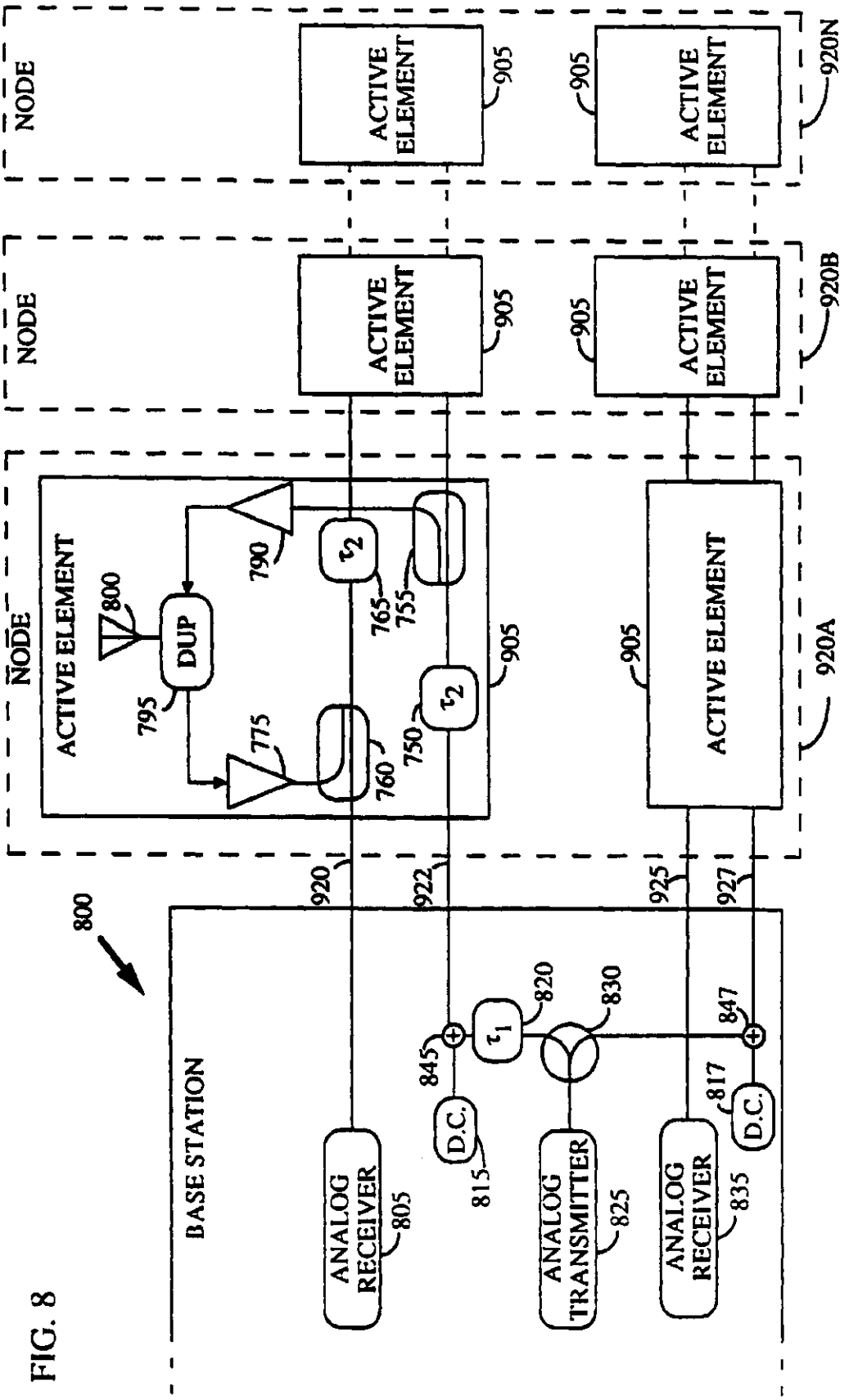
NODE
ACTIVE ELEMENT
905
920N
920B
920A
800
DUP
790
795
775
765
755
760
750
τ2
τ1
820
830
845
847
817
920
922
925
927
BASE STATION
ANALOG RECEIVER
805
D.C.
815
ANALOG TRANSMITTER
825
ANALOG RECEIVER
835
D.C.

FIG. 8

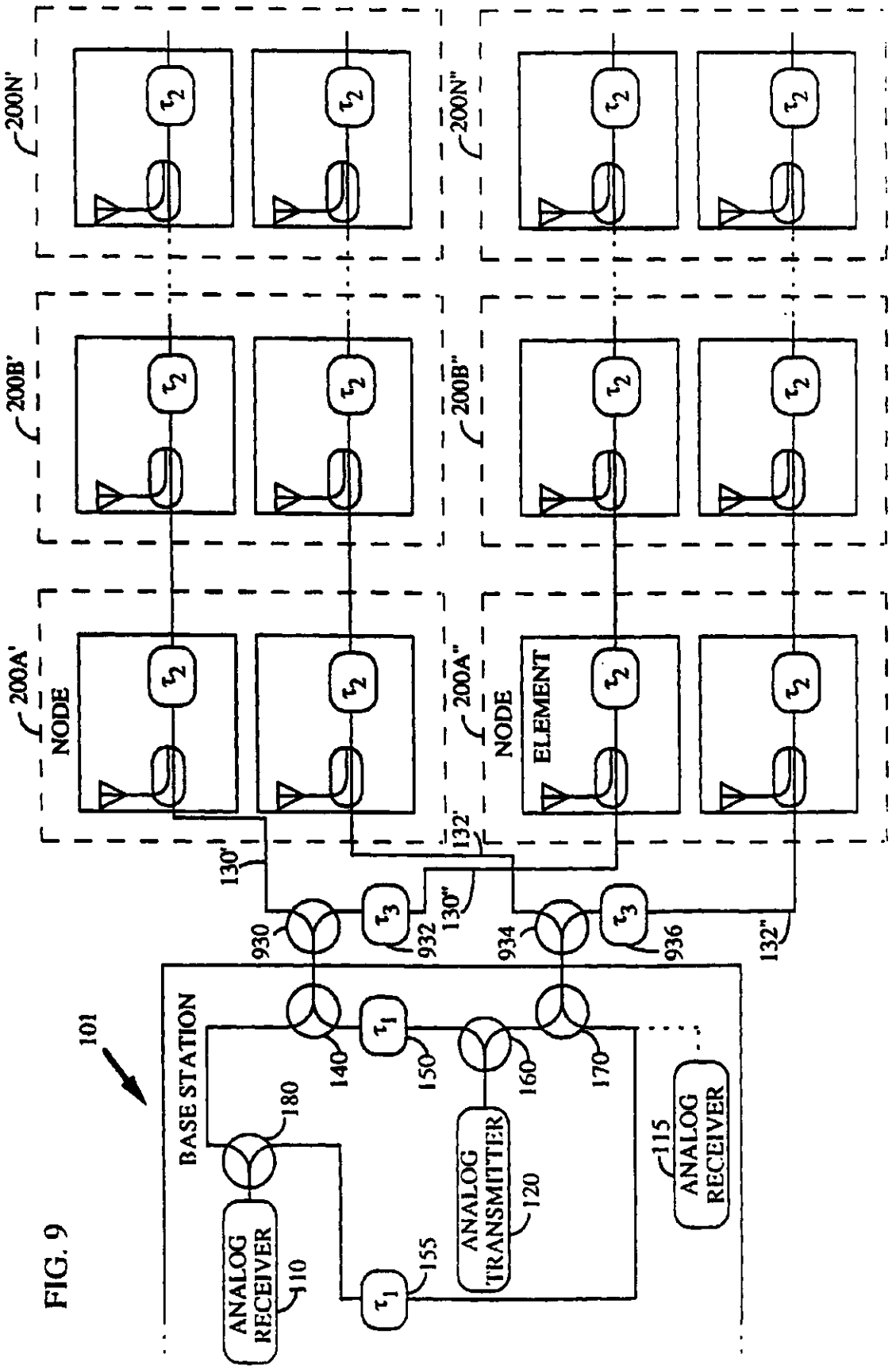
200N'
200N"
200B'
200B"
200A'
200A"
NODE
NODE
ELEMENT
τ_2
130'
132'
130"
132"
930
932
934
936
τ_3
101
BASE STATION
140
150
160
170
180
τ_1
155
ANALOG RECEIVER
110
ANALOG TRANSMITTER
120
115
ANALOG RECEIVER

FIG. 9

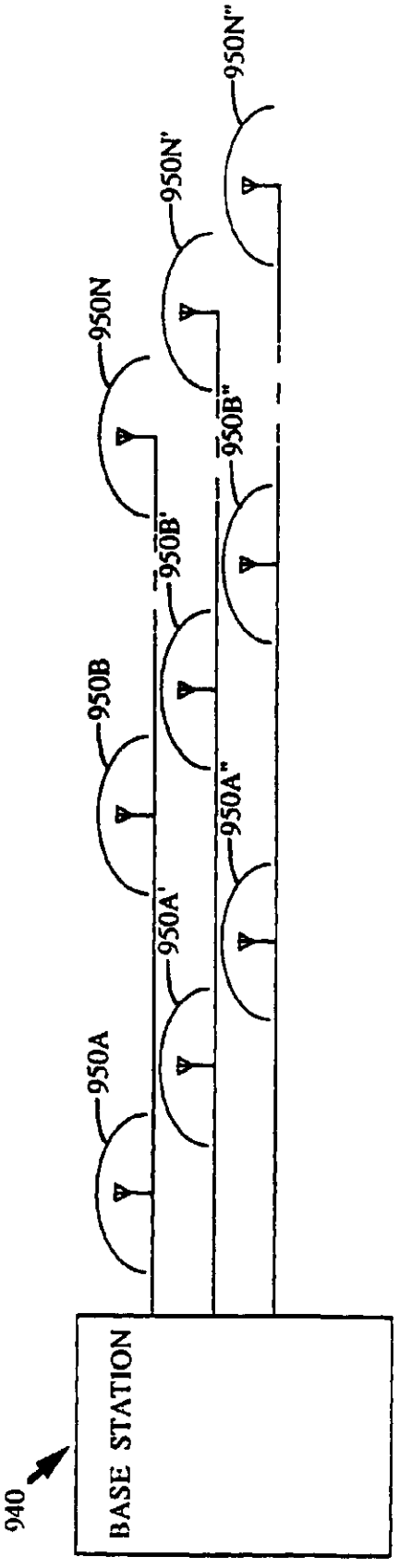
940
BASE STATION
950A
950A'
950A"
950B
950B'
950B"
950N
950N'
950N"

FIG. 10

FIG. 11

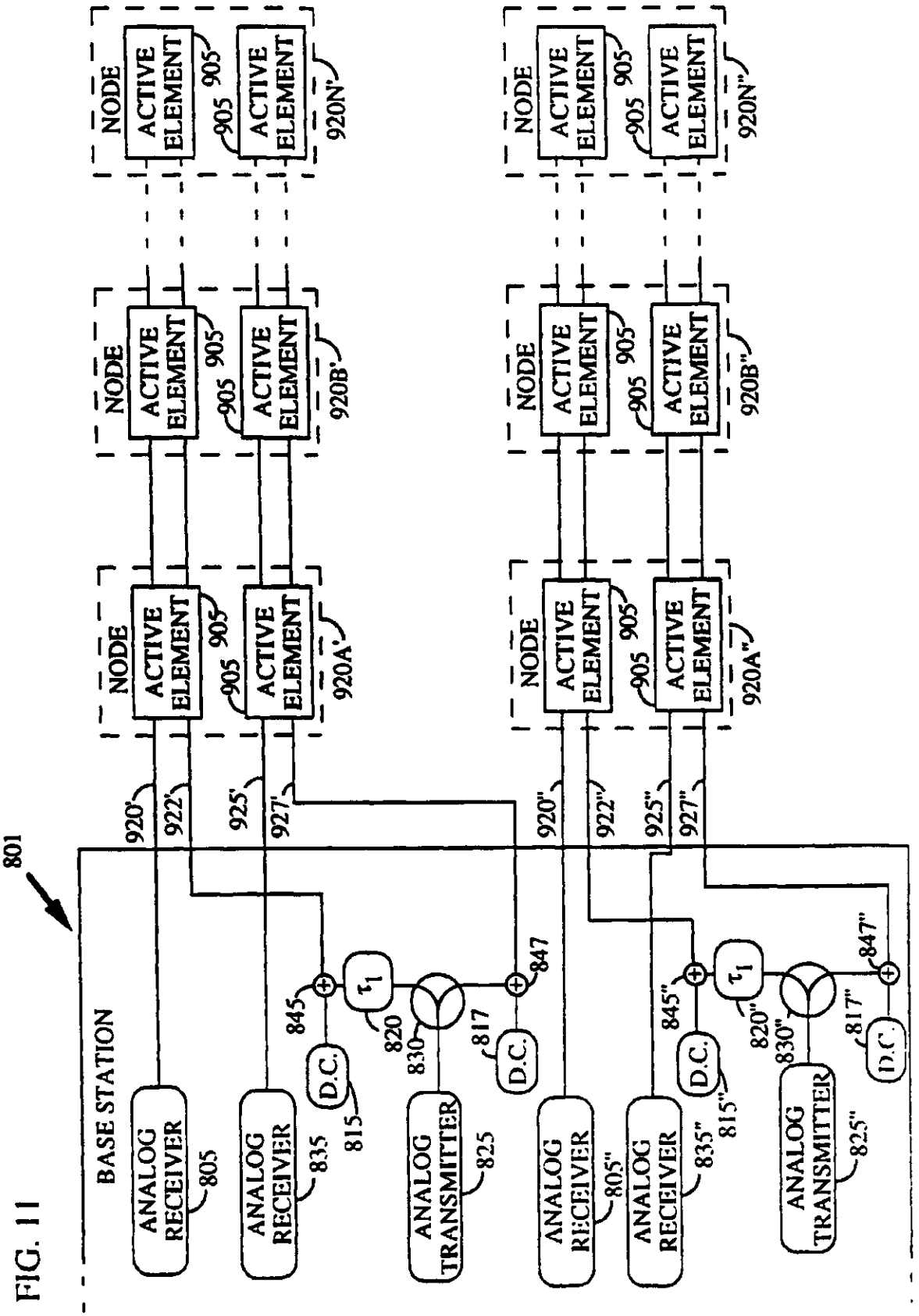
801
BASE STATION
ANALOG RECEIVER
805
ANALOG RECEIVER
835
D.C.
815
845
τ1
820
830
ANALOG TRANSMITTER
825
817
D.C.
847
NODE
ACTIVE ELEMENT
905
920A'
920B'
920N'
920'
922'
925'
927'
920A"
920B"
920N"
920"
922"
925"
927"
805"
835"
845"
815"
820"
830"
825"
817"
847"

REGISTER ENTRY FOR EP0667068

European Application No EP94926602.7 filing date 24.08.1994

Priority claimed:
27.08.1993 in United States of America - doc: 112392

PCT EUROPEAN PHASE
PCT Application PCT/US94/09657 Publication No WO95/06365 on 02.03.1995

Designated States BE CH DE DK ES FR GB GR IE IT LI LU MC NL PT SE AT

Title DUAL DISTRIBUTED ANTENNA SYSTEM.

Applicant/Proprietor
QUALCOMM INCORPORATED, 6455 Lusk Boulevard, San Diego, California 92121, United States of America [ADP No. 60649910002]

Inventors
F. RICHARD DEAN, 1005 Vereda Callada, Escondido, CA 92029, United States of America [ADP No. 63242895001]

P. FRANKLIN ANTONIO, 2765 Cordoba Cove, Del Mar, CA 92014, United States of America [ADP No. 58201146001]

S. KLEIN GILHOUSEN, 6474 Jackson Creek Road, Bozeman, MT 59715, United States of America [ADP No. 61668174001]

E. CHARLES WHEATLEY III, 2208 Caminito del Barco, Del Mar, CA 92014, United States of America [ADP No. 60046935001]

Classified to
H04B H01Q H04Q

Address for Service
TOMKINS & CO, PO Box 688, ASCOT, Berkshire, SL5 8YT, United Kingdom [ADP No. 00024737003]

EPO Representative
GEAROID PATRICK O'SULLIVAN, Tomkins & Co., 5 Dartmouth Road, Dublin 6, Ireland [ADP No. 62221957001]

Publication No EP0667068 dated 16.08.1995
Publication in English

Examination requested 16.05.1995

Patent Granted with effect from 12.02.1997 (Section 25(1)) with title DUAL DISTRIBUTED ANTENNA SYSTEM

06.12.1996 Notification from EPO of change of EPO Representative details from
GEAROID PATRICK O'SULLIVAN, Tomkins & Co., 5 Dartmouth Road, Dublin 6, Ireland [ADP No. 62221957001]
to
MICHAEL JOSEPH WALSH, TOMKINS & CO. 5, Dartmouth Road, Dublin 6, Ireland [ADP No. 60563558001]
Entry Type 25.14 Staff ID. RD06 Auth ID. EPT

**** END OF REGISTER ENTRY ****

RENEWAL DETAILS

PUBLICATION NUMBER EP0667068

PROPRIETOR(S)

QUALCOMM INCORPORATED, 6455 Lusk Boulevard, San Diego, California 92121, United States of America

DATE FILED 24.08.1994

DATE GRANTED 12.02.1997

DATE NEXT RENEWAL DUE 24.08.1998

DATE NOT IN FORCE

DATE OF LAST RENEWAL

YEAR OF LAST RENEWAL 00

STATUS PATENT IN FORCE

**** END OF REPORT ****