Dec. 7, 1926. 1,609,397

J. BRANDWOOD ET AL.

FLUTED SPINDLE

Filed June 14, 1923 2 Sheets-Sheet 1

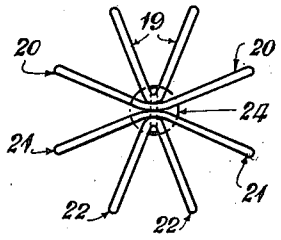

Fig. 1.

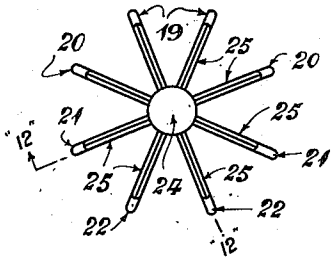

Fig. 4.

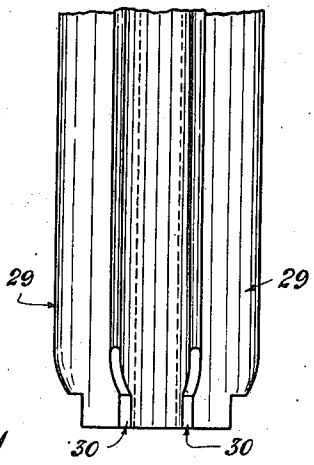

Fig. 8.

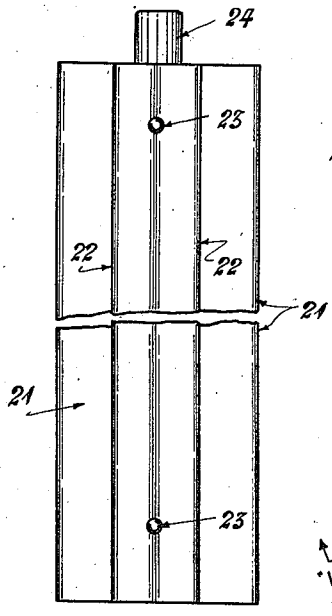

Fig. 2.

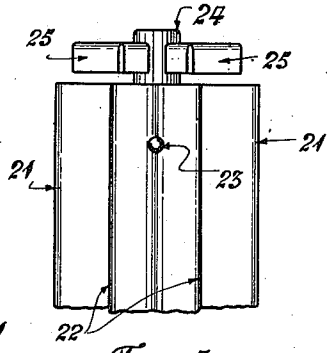

Fig. 5.

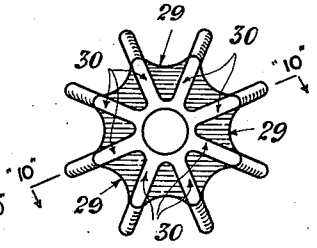

Fig. 9.

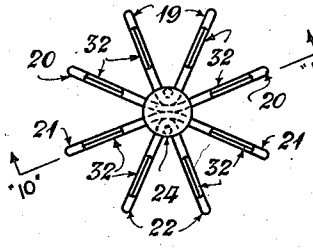

Fig. 6.

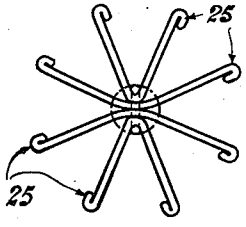

Fig. 3.

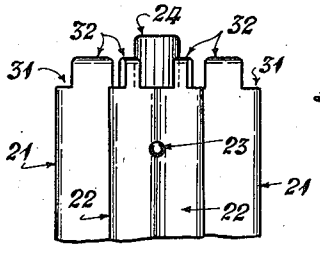

Fig. 7.

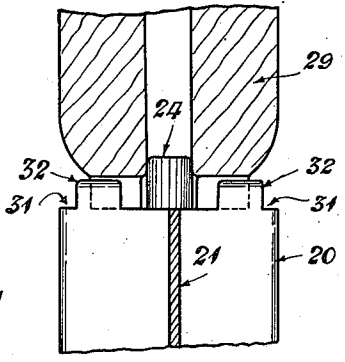

Fig. 10.

Inventors:
John Brandwood
Thomas Brandwood
Joseph Brandwood

By their Attorney:- J. H. Cornell

Dec. 7, 1926. 1,609,397

J. BRANDWOOD ET AL

FLUTED SPINDLE

Filed June 14, 1923 2 Sheets-Sheet 2

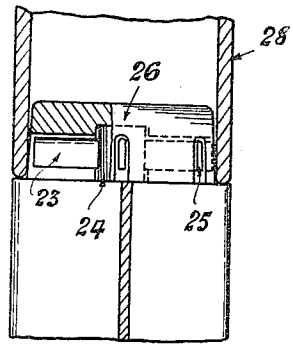

Fig. 12.

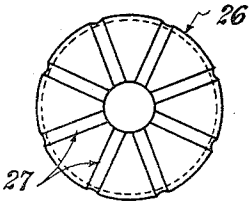

Fig. 11.

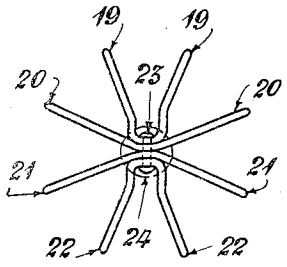

Fig. 13.

Inventors:
John Brandwood
Thomas Brandwood
Joseph Brandwood

By their Attorney :- J. Connell

Patented Dec. 7, 1926. 1,609,397

UNITED STATES PATENT OFFICE.

JOHN BRANDWOOD, THOMAS BRANDWOOD, AND JOSEPH BRANDWOOD, OF ELTON, BURY, ENGLAND.

FLUTED SPINDLE.

Application filed June 14, 1923, Serial No. 645,327, and in Great Britain April 28, 1923.

These improvements relate to a method of and means for the construction of fluted metal spindles as employed for various purposes in the industrial arts, as for instance in the process of dyeing of textile yarns wound in the form of cheeses and have for object a method of and means for the construction of said spindles in a simple and inexpensive manner as compared to the present known practice of cutting the flutes from the solid metal—with consequent waste of metal—or drawing the fluted spindles. The latter process presents technical difficulties, besides being expensive, where long fluted spindles are required.

In carrying the improvements into effect we form a fluted spindle of a plurality of sheet metal plates which are bent along a longitudinal line thereof and so placed together that the necessary fins to form the fluted spindle are at the required angular distance from each other. Our improvements contemplate further the preparation of spindles so prepared for the reception upon their upper ends of cheese tubes or cheese holders when the fluted spindles are employed in the carrying out of the process of dyeing yarn cheeses on such spindles as set forth in prior specification of British Letters Patent No. 210,661 and to which process an extended reference will be made hereinafter.

The improvements in the construction of fluted spindles from a plurality of bent metal plates, in various modifications, as also the preparation of the spindles for the reception of yarn cheese tubes and cheese holders, will now be fully described, reference being had to the accompanying drawings, wherein:—

Figure 1 is a plan and Figure 2 an elevation of a fluted spindle composed of three metal plates riveted together with their longitudinal edges bent to form eight ribs which are at a radial distance one from the other of 45 degrees;

Figure 3 is a plan similar to that shown in Figure 1, but having the edges of the plates returned to present a rounded outer longitudinal edge:

Figure 4 is a plan, and Figure 5 a fragmentary elevation of a spindle constructed in accordance with Figures 1 and 2, but having a neck provided with fins for a purpose hereinafter fully set forth;

Figures 6 and 7 are plan and fragmentary elevation respectively of a spindle as shown in Figures 1 and 2 but with projections formed on the ribs of the spindle to serve the purpose of the ribs on the neck shown in Figures 4 and 5;

Figures 8 and 9 are elevation and bottom plan respectively of a cheese holder adapted to fit upon a fluted spindle for the purpose hereinafter set forth;

Figure 10 is a composite section along lines 10—10 of Figure 6 and line 10—10 of Figure 9 showing the cheese holder of Figures 8 and 9 in position upon a fluted spindle as shown in Figures 6 and 7;

Figure 11 is a bottom view of an adjuster member to fit on the neck shown in the previous figures;

Figure 12 is as to its lower position a section on line 12—12 of Figure 4, with the adapter of Figure 11 shown in position partly in section; and

Figure 13 is a plan of a further modification.

Referring to Figures 1 and 2, 19, 20, and 21 and 22 are single plates of sheet metal, each of a length which is the length of the ultimate spindle. They may be of any convenient or desirable thickness, and are bent upon a former to the respective angles shown. Thus plates 19 and 22 are each bent upon themselves to an angle of 45 degrees along a longitudinal central line, and 20 and 21 are similarly bent, but each of these two plates 20 and 21 is bent upon itself to form an obtuse angle of 85 degrees. The plates so bent are then placed in position, being held if desired by a jig which is shaped for the purpose, and rivets 23 are then inserted and riveted up to keep the plates together. After riveting, the neck 24, which is a short cylindrical piece of solid metal, may be soldered, brazed, or otherwise secured to the top of the spindle formed by the four plates 19, 20, 21, and 22.

The fluted spindle need not consist of eight ribs formed from separate plates as just described. For six ribs, for instance, one plate may be left plane, and two other plates be bent at the appropriate angle and riveted to the straight plate, one on either

side thereof, the angles of the two bent plates being such that the ribs so formed and the two longitudinal sections of the plane metal plate will be equidistant 60 degrees from each other around the spindle centre.

The neck 24 may, if the fluted spindle is not to be used for the purpose set forth in prior specification 8,933 of 1923, be dispensed with.

In Figure 3 a spindle formed similarly to that of Figures 1 and 2 is shown, but the outer longitudinal edges of each plate 19, 20, 21, and 22 are returned upon themselves at 25 to present a rounded edge. This is particularly useful where the spindle is used for holding cheeses of yarn as set forth in the prior specification, or other like material which might be affected by sharp edges on the ribs.

The preparation of fluted spindles constructed as hereinbefore set forth, for the reception of cheese tubes and cheese holders for the carrying out of the process described and claimed in the specification to British Letters Patent No. 8,933 of 1923 will now be described, with reference to Figures 4 to 12 inclusive of the accompanying drawings. In order that the description may be fully understood, the process of the prior specification will now be briefly described. The fluted spindles employed are provided with a cylindrical neck at their upper ends and when it is desired to place a cheese of yarn, wound upon a central paper or like tube, upon the spindle, an adjuster is placed upon this circular neck, the adjuster being of an outside diameter which is equal to the inside diameter of the paper or like tube, the outer diameter of the cheese tube being equal to the overall diameter of the fluted spindle. The cheese tube is pressed upon this adjuster and the yarn mass can then be forced off the cheese tube and slid down the fluted spindle, this process being repeated with various cheeses until a spindle is full. Dyeing of the cheese then takes place as described in the specification referred to, and when it is desired to remove the cheeses from the fluted spindle each cheese is slid up the fluted spindle and on to a wooden cheese holder which is fluted to correspond to the spindle. This cheese holder is fitted upon the circular neck at the upper end of the fluted dyeing spindle, and being of an overall diameter which is equal to that of the said spindle, the cheese yarn mass easily slides thereupon.

In Figures 4 and 5 of the accompanying drawings the circular neck 24 secured upon the fluted spindle as set forth with reference to Figures 1 and 2, is formed with fins 25 which corresponds with the fins 19, 19, 20, 20, 21 21, 22 22, of the fluted spindle on which the said neck is secured.

The adjuster of the prior specification No. 8,933 of 1923 which fits upon the neck 24 when a cheese tube is to be placed in position upon the fluted spindle for the transference of the cheese yarn from the said tube to the said fluted spindle is formed according to these improvements as shown in Figure 11 and Figure 12. In these Figures 26 is the adjuster which is centrally bored to fit upon the neck 24, and it is also provided with recesses 27 of such number and dimensions that, when the adjuster is in position as shown in Figure 12, the fins 25 on neck 24 which fit tightly within the recesses 27. When the yarn of a cheese is to be transferred to the fluted spindle the cheese, wound on cheese tube 28, Figure 12, is placed in position as shown in that figure, the external diameter of the adjuster 26 allowing the cheese tube 28 to fit tightly thereon, and the external diameter of the said tube being exactly equal to the diameter of the fluted spindle, measured over the flutes. The yarn mass can then be forced down upon the fluted spindle.

When a cheese is to be removed from the fluted spindle after dyeing, the adapter 26 is removed, and a cheese holder 29—Figures 8 and 9—fluted to correspond with the fluted spindle and provided at its lower end with recesses 30 which fit tightly upon the ribs or fins 25 of the neck 24 is placed in position, the neck 24 being of equal diameter to the bore of the said cheese holder 29. The cheese can then be slid upon the fluted spindle and on to the cheese holder 29, the latter with its borne yarn mass being then removed and the process repeated with the remainder of the cheeses upon a fluted spindle.

In Figures 6, 7, and 10 is shown a modification of the above means for preparing a fluted spindle for the reception of a cheese tube or a cheese holder. In this modification the circular neck 24 is provided as before, but the upper ends of the fins 19 19, 20 20, 21 21, 22 22, of the fluted spindle itself are notched at 31 the width of each notch being equal to the thickness of the wall of the cheese tube 27 of Figure 12. The adjuster 26 may thus be dispensed with and the cheese tube with its yarn mass be placed upon the tops of the fins 19, 20, 21, 22, direct, and the yarn mass then be slid down from the cheese tube 27 upon the fluted spindle. The cheese holder 29 of Figure 8, is recessed at its lower end at 30 as before described, and it is placed in position upon the fluted spindle by pressing it tightly down thereupon, the projecting portions 32 of the fins of the fluted spindle entering the recesses 30 in the said cheese holder. A fragmentary section of a cheese holder in this position is shown in Figure 10, which is a composite section taken on line 10—10 of Figure 6, and line 10—10 of Figure 9, the

latter figure being a bottom plan of the cheese holder 29, as shown in elevation in Figure 8.

Various modifications of construction of a fluted spindle from sheet metal plates are illustrated in the remaining Figures 13 to 18 of the accompanying drawings. In Figure 13 a modification of the construction of spindle set forth with reference to Figures 1 and 2 is shown. In this modification to facilitate the insertion of the rivets 23 and the subsequent riveting process, the plates 19 and 22 are first doubled transversely upon themselves as shown in the figure, and the longitudinal edges thereof are then bent to the desired angle so that the said edges are at a distance of 45 degrees. The application of this modification to a fluted spindle with six fins or ribs, with one plane central plate and the other two secured to it so that the six longitudinal edges of the three plates will be equidistant around a circumference, will be obvious.

In all the various modifications of construction of a fluted spindle in the drawings, the application of a neck 24 is shown, and it will be understood that the said neck will in each case be provided where desired with the ribs 25 as shown in Figures 4 and 5. The modification of Figures 6 and 7, where the upper edges of the ribs of the fluted spindles are notched and have projections 32 as shown in those figures for engagement with the slots 30 of the cheese holder 29 of Figure 8, may be applied to any of the constructions of fluted spindles shown and described

We claim:—

1. A fluted metal spindle composed of a plurality of metal plates each of which has been bent along a central longitudinal line thereof, the plates being joined together at their angles each half of a plate forming one of a plurality of ribs radiating from a common centre.

2. A fluted metal spindle composed of a plurality of metal plates each of which has been returned on its outer longitudinal edges and each of which has been bent along a central longitudinal line thereof, the plates being joined together at their angles each half of a plate forming one of a plurality of ribs radiating from a common centre.

3. A fluted metal spindle composed of a plurality of metal plates each of which has been bent along a central longitudinal line thereof, the plates being joined together at their angles each half of a plate thus forming one of a plurality of ribs radiating from a common centre, a neck fitted upon one end of the spindle and centrally thereof, and an extension member borne by the spindle in the longitudinal plane of each rib, for the purpose hereinbefore set forth.

4. A fluted metal spindle composed of a plurality of metal plates each of which has been bent along a central longitudinal line thereof, the plates being joined together at their angles each half of a plate thus forming one of a plurality of ribs radiating from a common centre, a neck fitted upon one end of the spindle and centrally thereof, an extension member borne by the spindle in the longitudinal plane of each rib, and a yarn holder formed with a rib to correspond to each extension member and having recesses formed therein to fit upon the extension members.

In witness whereof we have hereunto set our hands.

JOHN BRANDWOOD.
THOMAS BRANDWOOD.
JOSEPH BRANDWOOD.