April 3, 1962 N. T. GRAY 3,027,617

QUICK-RELEASE MAGNETIC BUCKLE

Filed Nov. 18, 1960

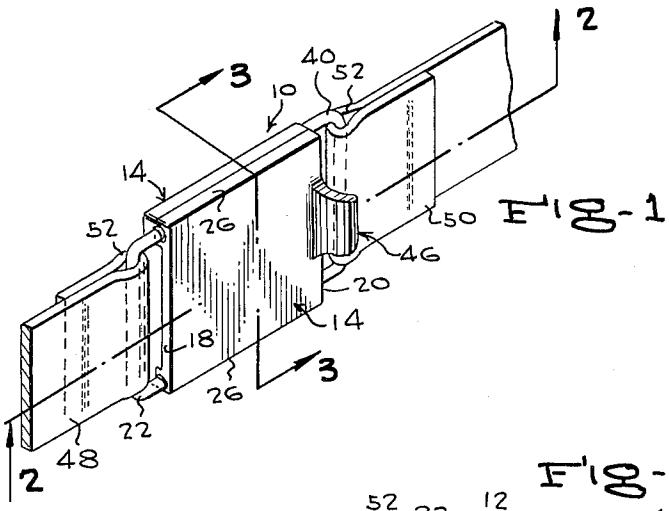

FIG-1

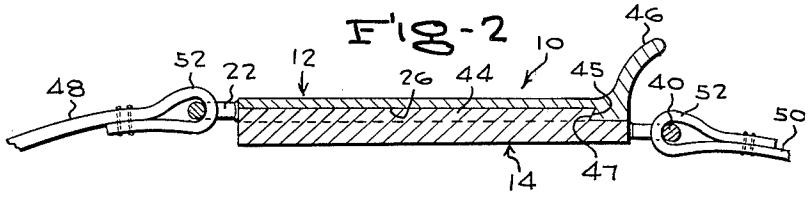

FIG-2

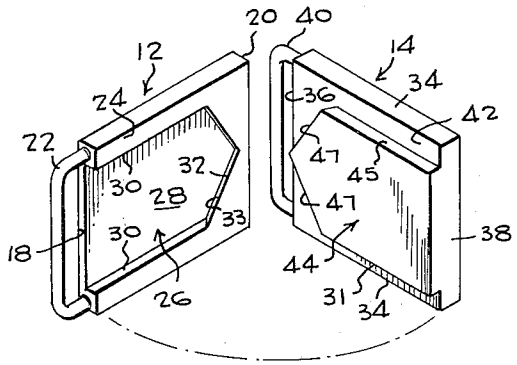

FIG-4

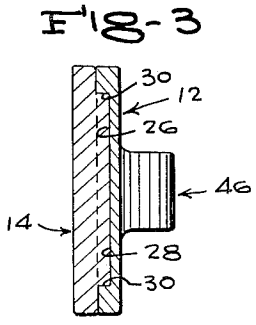

FIG-3

INVENTOR.
NORMAN T. GRAY
BY
McMorrow, Berman & Davidson
ATTORNEYS

United States Patent Office

3,027,617

Patented Apr. 3, 1962

3,027,617

QUICK-RELEASE MAGNETIC BUCKLE

Norman T. Gray, 2733 4th Ave., Sacramento, Calif.

Filed Nov. 18, 1960, Ser. No. 70,295
6 Claims. (Cl. 24—201)

This invention relates to a novel quick-release buckle adapted to be incorporated in straps, garment belts, and weighted diving belts and the like.

The primary object of the invention is the provision of a simple, efficient, reliable, and unusually strong buckle of the kind indicated, which, when its magnetically attracted components are engaged with each other, provides positive and full resistance to longitudinal displacement of the components relative to each other.

Another object of the invention is the provision of a buckle of the character indicated above wherein the components are easily, quickly, and fully separable from each other simply by pulling or pushing one of the components away from the other component in a direction substantially normal to the longitudinal planes of the components, one of the components being provided with a finger piece which facilitates such release of the components from each other.

A further object of the invention is the provision of an uncomplex buckle of the character indicated above, which is composed of only two easily manufactured components of unitary character, and which can be made in rugged and well-finished forms at relatively low cost.

Other important objects and advantageous features of the invention will be apparent from the following description and the accompanying drawings, wherein, for purposes of illustration only, a specific form of the invention is set forth in detail.

In the drawings:

FIGURE 1 is a fragmentary front perspective view showing a buckle of the invention incorporated in a strap, such as a diver's weighted belt, the components of the buckle being engaged;

FIGURE 2 is a longitudinal section taken on the line 2—2 of FIGURE 1;

FIGURE 3 is a transverse section taken on the line 3—3 of FIGURE 1; and,

FIGURE 4 is an exploded perspective view showing the components of the buckle separated.

Referring in detail to the drawings, wherein like numerals designate like parts throughout the several views, the illustrated buckle, generally designated **10**, consists of a first or outer component **12**, and a second or inner component **14**, both components being of magnetizable metal, such as steel, and one of the components being a permanent magnet.

The first component **12** consists of a flat plate, preferably of longitudinally elongated rectangular form, and having longitudinal edges **16** and outer and inner end edges **18** and **20**, respectively, the outer edge **18** having fixed thereon and extending therealong a U-shaped strap attaching loop **22**.

The component **12** is preferably of substantial and uniform thickness and has a flat inward surface **24** in which is formed a longitudinal detent recess **26** which opens to the outer end edge **18**. The recess **26** is preferably of uniform depth and has a flat bottom **28** and parallel side walls **30**. At its inward end, the recess **26** is bounded by a V-shaped inner end wall **32**. The recess **26** is preferably uniformly spaced from the longitudinal edges **16** of the plate **12**, and the apex of its inner end wall **32** is spaced from the inner end edge **20**.

The second component **14** consists of a flat plate, which is preferably of the same shape and dimensions as the first component **12**, and has longitudinal edges **34**, and outer and inner end edges **36** and **38**, respectively, with

a strap attaching loop **40**, like the loop **22**, fixed on and extending along its outer end edge **36**. The second plate **14** has a flat outward surface **42**, on which is formed an outstanding or raised longitudinally elongated detent lug **44**.

The detent lug **44** is of the same shape, depth or thickness, and dimensions as the detent recess **26**, and is adapted to seat conformably in the recess and to be strongly held in the recess by the magnetic attraction of the components **12** and **14** to each other, then exerted. As shown in FIGURES 2 and 3, the side walls **30** of the recess **26** and the side walls **45** of the detent lug **44** are disposed at right angles to the recess bottom **28**, but the surfaces **33** of the V-shaped end wall **32** of the recess **26** and the surfaces **47** of the triangular outward end of the lug **44**, are angularly undercut, so that the apex of the detent lug **44** engages behind the apex of the recess **26**, as shown in FIGURE 2, while the plates **12** and **14** are engaged. This arrangement serves not only to preclude longitudinally outward displacement of the plates **12** and **14** relative to each other, by pull of straps **48** and **50** secured, as indicated at **52**, through the loops of plates **12** and **14**, in opposite directions, but to preclude lateral separation of the plates, within the limit of the magnetic attraction of the plates to each other, except by forcibly pulling or pushing one of the plates away from the other plate.

Such separation of the plates **12** and **14**, in the illustrated form of buckle, involves application of manual force to a finger-piece **46** which extends laterally outwardly from the first plate **12**, at its inner end edge **20**, and curves laterally outwardly and longitudinally outwardly relative to the outer plate **12**, the force being applied in a manner to initially move the outer end of the plate **12** away from the inner plate **14** and disengage the undercut apex of the recess **26** out of engagement with the undercut apex of the detent lug **44**, followed by full separation of the outer plate **12** from the inner plate **14**. This arrangement, in the case of incorporation of the buckle **10** in a diver's weighted belt, involving the straps **48** and **50**, enables the diver to easily and instantaneously undo the buckle **10** and drop the belt, as in a sudden emergency, with a minimum of manipulation of the buckle.

The plates **12** and **14** are connected together simply by moving the detent lug **44** endwise into the apex of the recess **26**, whereat the plates are magnetically forced together with the lug **44** fully engaged in the recess.

Although there has been shown and described herein preferred forms of the invention, it is to be understood that the invention is not necessarily confined thereto, and that any change or changes in the structure of and in the relative arrangements of components thereof are contemplated as being within the scope of the invention as defined by the claims appended hereto.

What is claimed is:

1. A buckle consisting of an outer plate and an inner plate, one of said plates being a magnet and the other plate magnetizable, said plates having plane facing sides which are engaged and magnetically adhered together, and strap attaching means on the longitudinally outward ends of the plates, and a lateral finger-piece on the outward side of the outer plate at the longitudinally inward end of the outer plate, the facing side of the outer plate having a longitudinal detent recess spaced from its inward end and opening to its outward end, the facing side of the inner plate having an outstanding longitudinal detent lug thereon similar in shape to and engaged in the recess.

2. A buckle consisting of an outer plate and an inner plate, one of said plates being a magnet and the other plate magnetizable, said plates having plane facing sides which are engaged and magnetically adhered together, and

strap attaching means on the longitudinally outward ends of the plates, and a lateral finger-piece on the outward side of the outer plate at the longitudinally inward end of the outer plate, the facing side of the outer plate having a longitudinal detent recess spaced from its inward end and opening to its outward end, the facing side of the inner plate having an outstanding longitudinal detent lug thereon similar in shape to and engaged in the recess, the closed end of the recess being undercut and the related end of the detent lug being undercut and engaged behind the closed end of the recess.

3. A buckle consisting of an outer plate and an inner plate, one of said plates being a magnet and the other plate magnetizable, said plates having plane facing sides which are engaged and magnetically adhered together, and strap attaching means on the longitudinally outward ends of the plates, and a lateral finger-piece on the outward side of the outer plate at the longitudinally inward end of the outer plate, the facing side of the outer plate having a longitudinal detent recess spaced from its inward end and opening to its outward end, the facing side of the inner plate having an outstanding longitudinal detent lug thereon similar in shape to and engaged in the recess, the closed end of the recess being undercut and the related end of the detent lug being undercut and engaged behind the closed end of the recess, the related end of the detent lug and the closed end of the recess being V-shaped.

4. A buckle consisting of an outer plate and an inner plate, one of said plates being a magnet and the other plate magnetizable, said plates having plane facing sides which are engaged and magnetically adhered together, and strap attaching means on the longitudinally outward ends of the plates, and a lateral finger-piece on the outward side of the outer plate at the longitudinally inward end of the outer plate, the facing side of the outer plate having a longitudinal detent recess spaced from its inward end and opening to its outward end, the facing side of the inner plate having an outstanding longitudinal detent lug thereon similar in shape to and engaged in the recess, the closed end of the recess being undercut and the related end of the detent lug being undercut and engaged behind

the closed end of the recess, the detent lug and the recess being of the same depth and dimensions.

5. In a buckle, an outer plate, an inner plate, one of said plates being magnetic and the other magnetizable, said plates having plane facing surfaces, said plates having longitudinally inward and outward ends, the facing surface of one plate having a longitudinal recess having a closed inner end and an open outer end at the longitudinally outward end of the plate, the facing surface of the other plate having thereon a longitudinal lug projecting laterally therefrom, said lug being substantially the same shape as said recess and extending longitudinally outwardly from the inner end of said other plate, said lug being engaged in the recess with the facing surfaces of the plates engaged.

6. In a buckle, an outer plate, an inner plate, one of said plates being magnetic and the other magnetizable, said plates having plane facing surfaces, said plates having longitudinally inward and outward ends, the facing surface of one plate having a longitudinal recess having a closed inner end and an open outer end at the longitudinally outward end of the plate, the facing surface of the other plate having thereon a longitudinal lug projecting laterally therefrom, said lug being substantially the same shape as said recess and extending longitudinally outwardly from the inner end of said other plate, said lug being engaged in the recess with the facing surfaces of the plates engaged, said plates having strap attaching loops on their longitudinally outward ends, and a lateral finger-piece on the outer side of the outer plate at the longitudinally outward end thereof.

References Cited in the file of this patent

UNITED STATES PATENTS

2,266,936	Strauss	Dec. 23, 1941
2,397,931	Ellis	Apr. 9, 1946
2,515,757	Browner	July 18, 1950
2,648,884	Loofboro	Aug. 18, 1953
2,654,929	Feibelman	Oct. 13, 1953
2,673,755	Asp	Mar. 30, 1954