WEB-LAPPING MACHINE

Filed Sept. 7, 1967 4 Sheets-Sheet 1

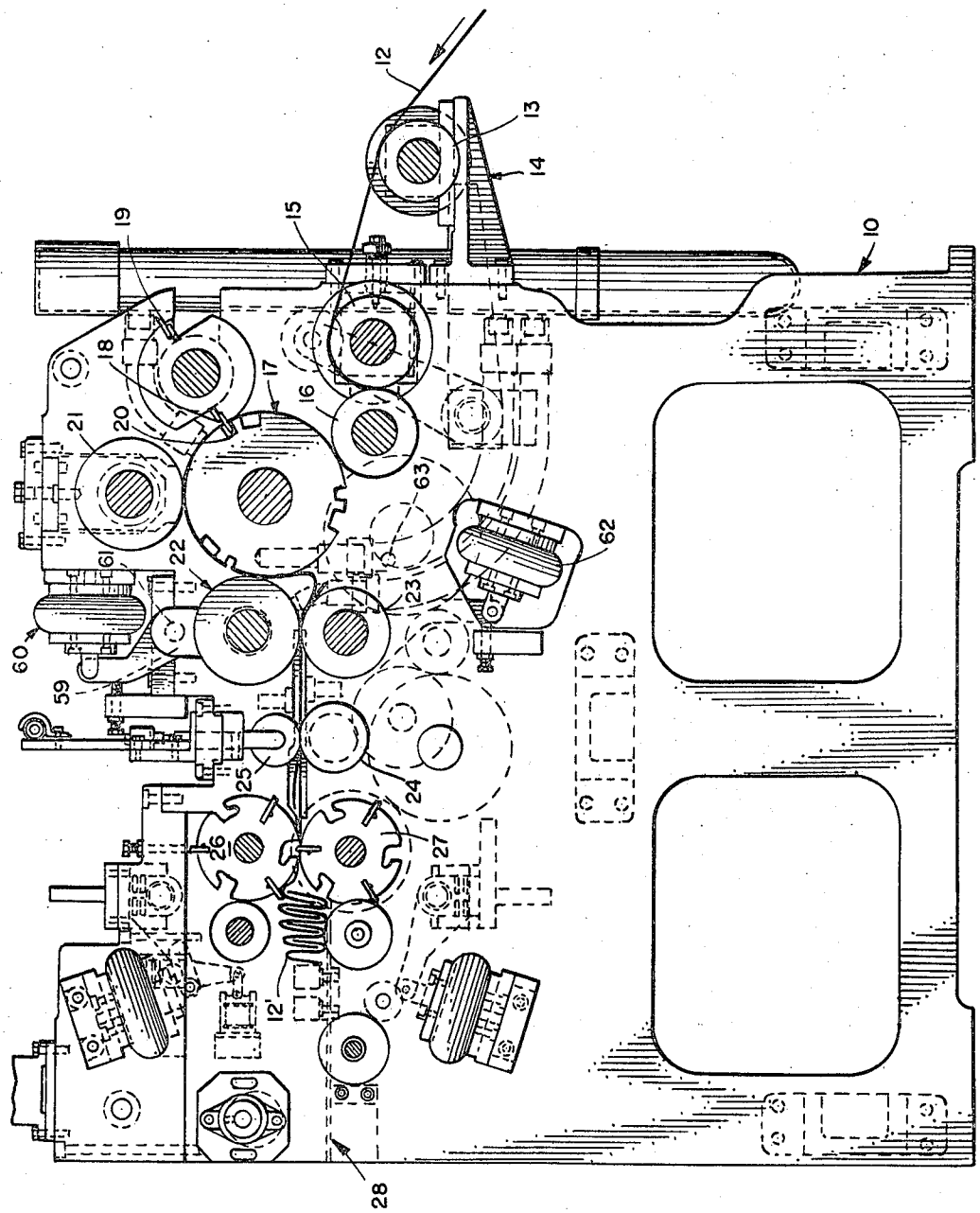

FIG. 1

INVENTOR:
ERNST DANIEL NYSTRAND
BY
Dawson, Tilton, Fallon & Lungmus
ATT'YS

WEB-LAPPING MACHINE

Filed Sept. 7, 1967 4 Sheets-Sheet 2

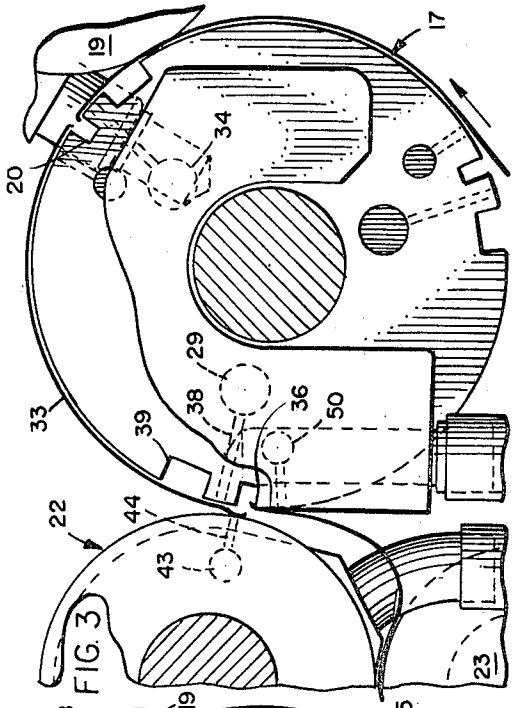

FIG. 3

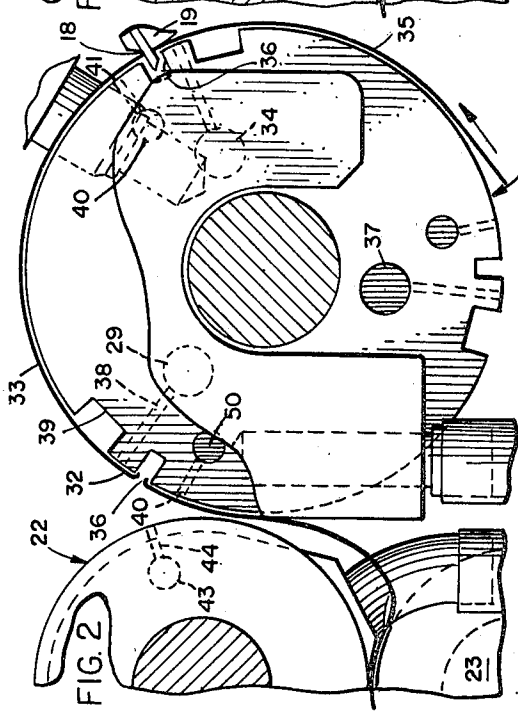

FIG. 2

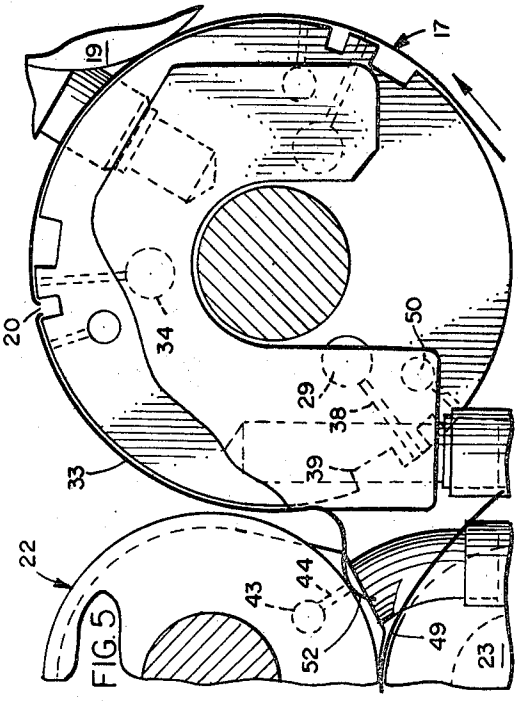

FIG. 5

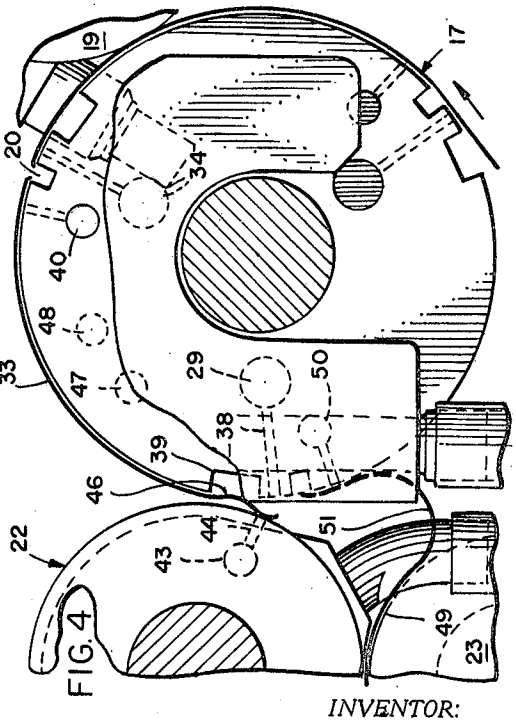

FIG. 4

INVENTOR:
ERNST DANIEL NYSTRAND
BY
Dawson, Dilton, Fallon, Lungmus
ATT'YS

WEB-LAPPING MACHINE

Filed Sept. 7, 1967 4 Sheets-Sheet 3

FIG. 7

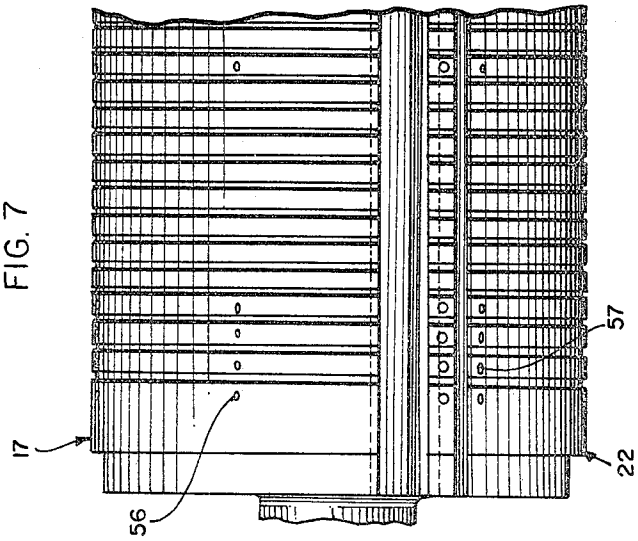

FIG. 6

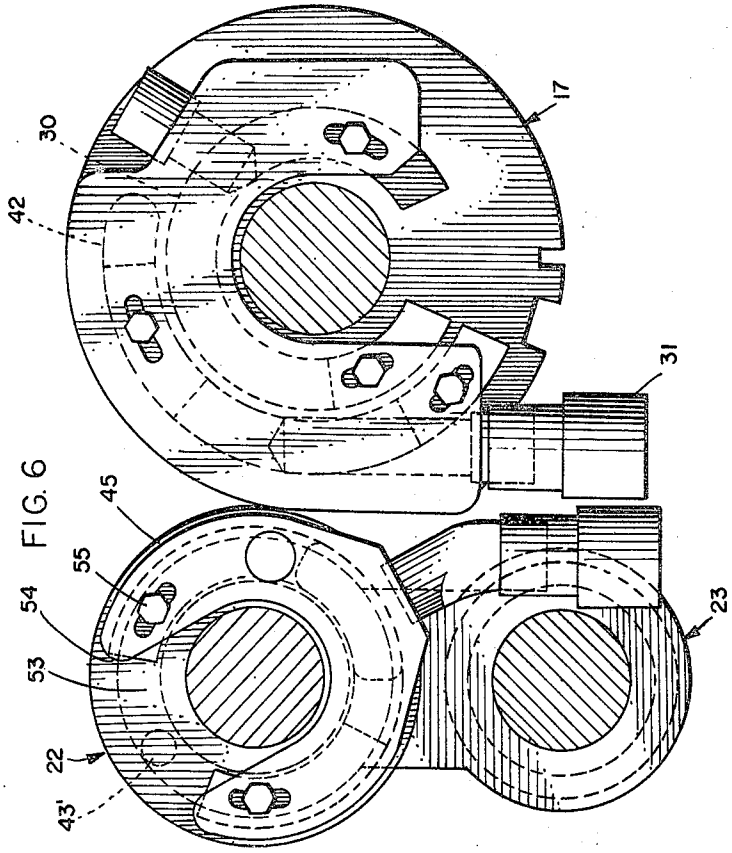

INVENTOR:
ERNST DANIEL NYSTRAND
BY
Dawson, Tilton, Fallon & Lungmus
ATT'YS

WEB-LAPPING MACHINE

Filed Sept. 7, 1967 4 Sheets-Sheet 4

FIG. 8

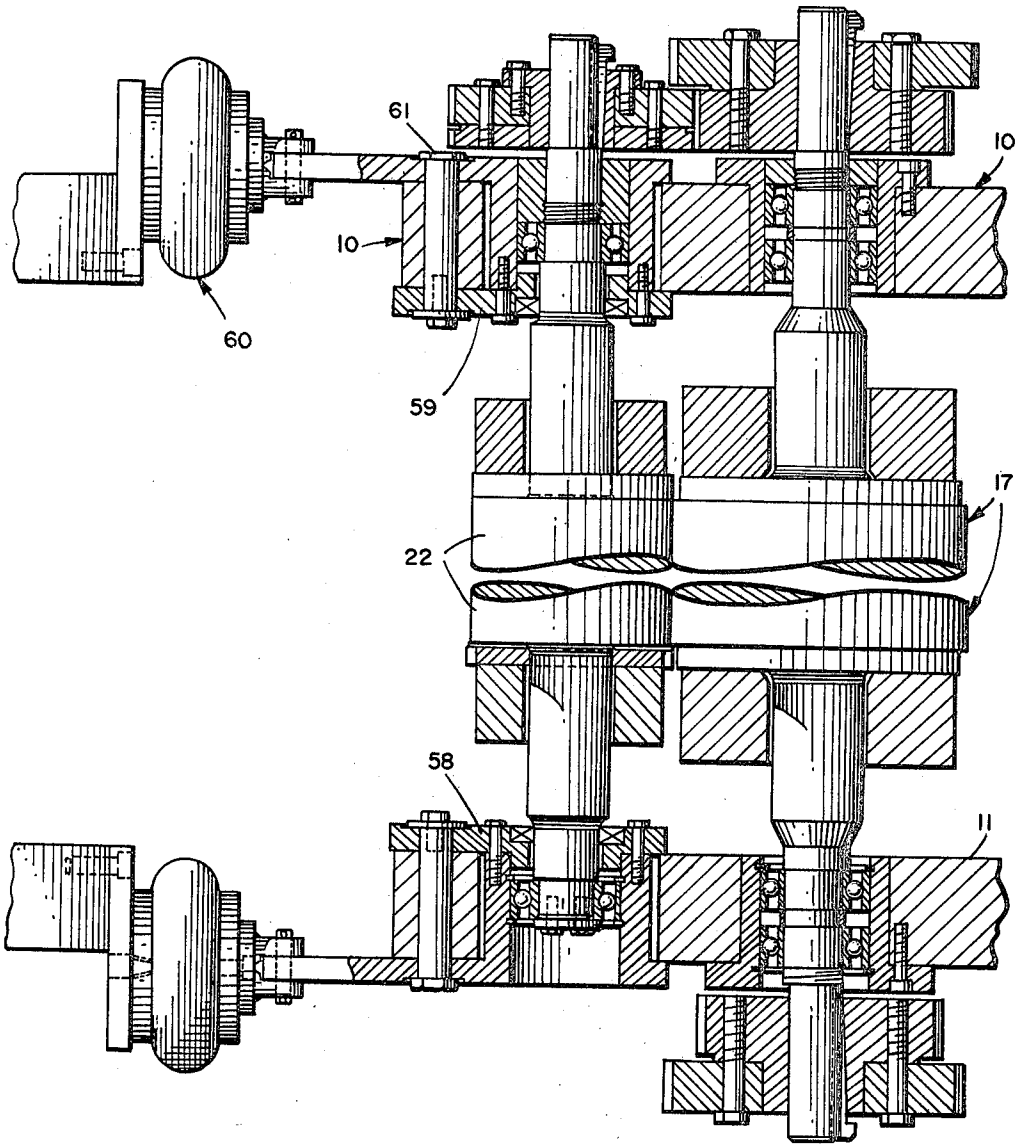

INVENTOR:
ERNST DANIEL NYSTRAND
BY
Dawson, Tilton, Fallon & Lungmus
ATT'YS

United States Patent Office

3,490,762

Patented Jan. 20, 1970

1

3,490,762
WEB-LAPPING MACHINE

Ernst Daniel Nystrand, Green Bay, Wis., assignor to Paper Converting Machine Company, Inc., Green Bay, Wis., a corporation of Wisconsin

Continuation-in-part of application Ser. No. 644,375, June 7, 1967. This application Sept. 7, 1967, Ser. No. 666,178

Int. Cl. B65h *29/66, 45/101*

U.S. Cl. 270—59 3 Claims

ABSTRACT OF THE DISCLOSURE

A web-processing machine wherein leading edge portions of transversely severed webs are sequentially transferred from a faster roll to a slower roll to achieve a lapping or shingling effect.

This invention is an improvement on the apparatus seen in Nystrand and Spencer application, Ser. No. 438,560, filed Mar. 10, 1965, now Patent No. 3,338,575; it further constitutes a continuation-in-part of my co-pending application Ser. No. 644,375, filed June 7, 1967.

SUMMARY OF THE INVENTION

The invention finds utility in the production of paper products such as towels where the overlapped web segments are thereafter zigzag-folded for sequential dispensing. The patent case incidentally discloses the invention claimed here but is directed to novel folding apparatus. The earlier joint case has to do with a different version of web-lapping and employed novel vacuum means for handling the trailing portion of a transferred web. This vacuum means was interposed between the conventionally-employed bedroll and retard roll. The instant invention departs from the previously-employed procedure in utilizing novel recess means for handling a portion of the web just rearward of the leading edge and thereby effect a superior control over the webs being lapped.

The invention is described in conjunction with an illustrative embodiment, in which—

FIG. 1 is a fragmentary elevational view, partially in section, of a machine which is employed for the formation of zigzag-folded toweling and which incorporates the teachings of this invention;

FIGS. 2–5 (on the second drawing sheet) are enlarged fragmentary elevational views, partially in section, of the bedroll and retard roll in different orientations so as to show the development of the web-lap;

FIG. 6 is a fragmentary elevational view, partially in section of the bedroll and retard roll as equipped with vacuum manifolds;

FIG. 7 is a fragmentary and elevational view of the bed and retard roll; and

FIG. 8 is a fragmentary and elevational view, partially in section, of the above two rolls with associated supporting framework and means for varying the relative positions of the aforesaid rolls.

In the illustration given and with particular reference to FIG. 1, the numeral **10** designates generally one side frame of the towel-producing machine. The other frame is designated **11** and can be seen in FIG. 8. The side frames provide the means for mounting the various rolls which are employed to process the webbing.

GENERAL DESCRIPTION OF WEB TRAVEL

Referring now to the extreme righthand side of FIG. 1, the web **12** is seen to pass first over a spreading roll **13** which is generally known to the trade as a "Mount Hope" roll, having a curved surface for eliminating

2

wrinkles. The frame **10** is equipped with a suitable pedestal and bearing generally designated **14** for the support of the roll **13**. Proceeding to the left in FIG. 1, the web **12** is next seen to engage draw rolls **15** and **16** and thereafter is in partial wrapping engagement with a bedroll generally designated **17**. Here the web is caused to adhere to the bedroll by vacuum and is cut by serrated blades as at **18** mounted on a cutoff roll **19**. Each blade **18** cuts the web **12** as the blade **18** enters a mating groove as at **20** in the bedroll **17**.

A pinch roll **21** (as with the rest of the rolls being rotatably carried by the frame **10**) prevents the web (now a segment) from backing up at cutoff and insures cleaner and better cutoff. The next roll in the path of the web **12** (now in segmental form) is the so-called "retard" roll generally designated **22**. As indicated previously, lapping or shingling has been carried out through the use of two basic rolls—the bedroll and retard roll with the retard roll traveling at a slower surface speed than the bedroll.

As the leading edge of the cut web comes close to the retard roll **22**, the vacuum holding the leading edge of the web against the bedroll **17** is valved off and the corresponding vacuum in the retard roll **22** is valved on to transfer the leading edge from the surface of the bedroll **17** to the surface of the retard roll **22**. I have found that this transfer is advantageously achieved when there is a space of approximately 0.025" to 0.030" between the rolls when ordinary toweling-grade webbing is being processed.

Once the leading edge of a cut web is transferred to the surface of the retard roll **22**, the leading edge slows down while the trailing edge portion of a web is advancing at the same rate as the web **12** previously referred to. The handling of the slack necessarily developed by this speed differential is disclosed in detail in FIGS. 2–5 to which reference will be had later in this disclosure.

The slower traveling web is confined between the retard roll **22** and a mating or cooperating roll **23**. By the time the webbing passes between the rolls **22** and **23**, the lap or shingle is developed and the amount of lapping is equal to the difference in distance traveled between each cut of the cutoff roll **5**. In the illustration given, the rolls **22** and **23** travel one-third slower than the bedroll **17**. Therefore, the overlap is equal to one-third of the cut sheet length. This method of lapping has shown a reliability at high speeds above 500 feet per minute.

The remaining processing of the web segment is described in detail in my above mentioned co-pending application, Ser. No. 644,375, and reference may be had thereto for further details.

Roll **24** is a slitter bedroll equipped with hardened anvil sections. Slitters **25** engage these sections to split the web into commercial widths that can be dispensed from wall cabinets in washrooms. Folding rolls **26** and **27** employ tuckers and grippers to develop a zigzag-folding in the fashion described in application Ser. No. 644,375. Ultimately, the segmented, lapped web **12'** is conducted away from the apparatus by means of a conveyor generaly designated **28**.

Alluded to previously, were certain vacuum ports. Referring now to FIG. 2, it will be seen that the numeral **29** designates a longitudinally-extending bore in the bedroll **17**. As the bedroll rotates, the bore **29** comes into register with an arcuate manifold **30** (see FIG. 6), the manifold **30** being coupled to a means of creating a vacuum as at **31**. In the illustration given, the bedroll **17** is a "three-time" roll, i.e., having a circumference accommodatnig three lengths of the web segments used to develop the interfolded towels. Thus, the bore **29** is adapted to urge the leading edge **32** of the web segment **33** against the bedroll. A second longitudinally-extending bore **34** is adapted to urge the leading edge of a succeed-

ing web segment **35** against the periphery of the bedroll **17**. The segments **33** and **35** are developed by the action of the knife **18** in conjunction with the mating groove **36** (as seen in the upper righthand corner of FIG. 2). A third longitudinally-extending bore **37** is provided in the bedroll **17** and each of the bores **29**, **24** and **37** is in communication with the surface by means of radial-extending bores as at **38** (designated only relative to the longitudinaly-extending bore **29**). Each bore **29**, **34** and **37**, as the case may be, has its associated mating groove as at **36** and following the associated passage **38**, a recess or ditch as at **39** which is employed to "take-up the slack" in the toweling as the leading edge is transferred from the bedroll **17** to the retard roll **22**.

Also employed in this transfer is a second set of vacuum ports which communicate with the periphery of the bedroll **17** in line with the trailing end portions of the web segments **33** and **35**. For example, the trailing end portion of the web segment **33** is urged against the bedroll periphery by virtue of vacuum existing in a longitudinally-extending bore **40** which communicates with the surface of the bedroll by means of a radially-extending passage **41**. Similar *through* bores and passages are provided in association with the other mating grooves **36**. It will be noted that the longitudinally-extending bore **40** is spaced radially outward of the longitudinally-extending bores **29**, **34** and **37** and thus are serviced by means of a second arcuate manifold as at **42** in FIG. 6.

DETAILED DESCRIPTION OF OPERATION

Still referring to the second drawing sheet which includes FIGS. 2–5, the web segment **33** in FIG. 2 has just been developed by the co-action of the knife blade **18** and the mating groove **36**. The leading edge of the web segment **33** is urged against the periphery of the bedroll **17** by virtue of the vacuum existing in the longitudinally-extending bore **29**. The trailing edge of the web segment **33** is urged against the periphery of the bedroll **17** by virtue of the vacuum existing in the longitudinally-extending bore **40**.

Truning now to FIG. 3, it will be seen that the bedroll **17** has rotated slightly in a counter-clockwise direction so as to bring the mating groove **36** associated with the through bore **29** into alignment with the line connecting the centers of the bed and retard rolls **17** and **22**, respectively. The vacuum, in the illustration given, wherein the three-time bedroll has a diameter of 9.132″ and the top retard roll has a diameter of 6.088″, is completely shut off in the through bore **29** about 9/16″ above the center line of the retard roll **22** and bedroll **17** nip. At this point in time, vacuum is removed from the through bore **29** and vacuum is applied to a cooperating through bore **43** provided in the retard roll **22**. The through bore **43** communicates with the surface of the retard roll **22** by means of a passage **44** and the retard roll has associated therewith an arcuate manifold as at **45** (see FIG. 6). Because vacuum is released from the bore **29** and applied to the bore **43**, the leading edge of the web segment **43** is removed from the surface of the bedroll **17** and urged against the surface of the retard roll **22**. This is seen schematically in FIG. 3 wherein the distance between the surfaces of the rolls **17** and **22** is exaggerated. As pointed out previously, this distance for the handling of toweling is ordinarily 0.025″ to about 0.030″, in effect defining a "nip" between the rolls.

As the bedroll **17** continues to rotate in a counter-clockwise fashion, slack develops in the web segment **33** by virtue of the fact that the retard roll **22** is moving at a lower surface speed. In the illustration given, the diameters of the retard and bedrolls **22** and **17**, respectively, are related by a ratio of 2:3 and rotate at the same angular velocity. Therefore, a surface speed in the retard roll **22** of two-thirds that in the bedroll **17** is achieved. Since the position of the leading edge of the web segment **33** is determined by the position of the through bore **43** in retard roll **22**, and since the trailing edge of the web segment **33** is determined by the position of the through bore **40** in bedroll **17**, and since the latter is moving more rapidly than the former, slack necessarily develops. This slack, which is designated **46** in FIG. 4, is received within the recess or ditch **39**.

It will be appreciated that a plurality of through bores such as that designated **40** may be provided for each web segment as for example in the position designated **47** and **48** and thereby serve to urge the web segment into tight engagement with the bedroll surface **17** rearward of the ditch **39**.

Turning now to FIG. 5, the bedroll **17** is seen to be in still a further degree of rotation, i.e., from that seen in FIGS. 4, 3 and 2—in that order. In FIG. 4, the ditch **39** was on the line joining the centers of the rolls **17** and **22**. The ditch **39** in FIG. 5 is seen to have been rotated approximately 30° beyond the showing in FIG. 4. By this time, the trailing edge of the preceding web segment as at **49** (so designated in FIGS. 4 and 5) has been detached completely from the bedroll **17**. For example, in FIG. 4, the outer through bore **50**, which is associated with the trailing edge of the web segment **49**, still has vacuum applied thereto and causes thereby a distinct loop **51** in the preceding web segment **49**. By the time the configuration of FIG. 5 is reached, the through bore **50** no longer has vacuum applied thereto (by virtue of no longer being in register with the arcuate manifold **42**) so that the trailing edge of the preceding web segment **49** now falls by gravity to the position seen in FIG. 5. In FIG. 5, it is seen that the leading edge portion of the web segment **33** is advancing to a position over, i.e., above, the trailing portion of preceding web segment **49**. Both segments **33** and **49** are proceeding at the same rate and thus the desired lapping or shingling is achieved.

In the illustration given, by virtue of having the mating grooves **36** provided in the bedroll, there is provided an advantageous crimping of the extreme leading edge of each web segment as at **52** relative to the segment **33** (so designated in FIG. 5). In this fashion, there is no possibility that the leading edge portion of the segment **33** would be spaced away from the surface of the retard roll **22**. If, for example, the crimping were the reverse, the upturned leading edge portion may result in spacing of the web segment from the port developed by the end of the passage **44** and thus result in inferior holding action of the web segment **33** by virtue of the vacuum existing within the through bore **43**. Also, it is apparent that the vacuum within the various bores acts directly on the web segment in question and not through a preceding or following web segment so that precise positioning of the various web segments is achieved. Still further, the arrangement makes advantage use of gravity since when the vacuum is removed from the through bore **50**, the trailing edge of the preceding web segment **49** drops by gravity from the position seen in FIG. 4 to that seen in FIG. 5.

Referring now to the third drawing sheet, to which reference has already been made insofar as arcuate manifolds are concerned, it is seen that in FIG. 6, the retard roll **22** has associated therewith the arcuate manifold **45**. The manifold **45** is essentially horseshoe-shaped in end elevation and abuts in sealing relation the end wall **53** of the retard roll **22**. Thus, when a given through bore **43′** is in the space not covered by the arcuate manifold **45**, there is no vacuum on the particular through bore **43′**. Further, the extent of arcuate travel in which a given through bore is exposed to vacuum, is regulated by means of end fittings **54** positionably mounted on the manifold **45** by means of hexheaded bolts **55**. The foregoing description of a manifold is generally known to those skilled in the art and similar manifolds are found, for example, in the previously-identified application, Ser. No. 438,560. In like fashion, the manifolds **30** and **42** ride against the end wall of the bedroll **17** and have the arcuate extent of

vacuum application adjustable by means of suitable blocks. In certain instances, I find it advantageous to groove the vacuum rolls **17** and **22**, respectievly, as seen in FIG. 7, and the actual ports **56** and **57** corresponding to the through bores **29** and **43**, respetcively, are identified in FIG. 7.

As indicated previously, the control of the spacing between the bedroll **17** and the retard roll **22** is important—varying, however, with different calipers of paper. It is apparent that there has to be some clearance in order to accommodate the finite thickness of paper which must pass through the nip between the two rolls. Further, there should be a slight additional spacing to insure that there is a transfer actually achieved by virtue of cessation of vacuum in the through bore **29** and application of vacuum in the through bore **43**. This is achieved by means of pivotally positioning the retard roll **22** with relation to the fixed position of the bedroll **17**. In the illustration given, the retard roll **22** is journaled in a pair of arms **58** and **59** (see FIG. 8). The arm **59** is seen in side elevational view in the central upper portion of FIG. 1. Each arm is coupled to an actuator generally designated **60** which may take the form of a resilient, hollow donut capable of being internally pressurized so as to pivot the associated arm, i.e., **59**, about a stub shaft **61** fixed in position on the frame **10**. This determines the vertical clearance between the bedroll **17** and the retard roll **22**. A second set of actuators, one of which is designated **62** in FIG. 1, is employed for pivoting the retard roll **22** about the pivot **63** so as to regulate the horizontal clearance between the bedroll **17** and retard roll **22**.

While in the foregoing specification a detailed description of an embodiment of the invention has been set down for the purpose of illustration, many variations of the details herein given may be made by those skilled in the art without departing from the spirit and scope of the invention.

I claim:

1. In web-lapping apparatus, a frame, a bedroll mounted for rotation in said frame, means for rotating said bedroll at a predetermined surface speed, a retard roll mounted for rotation in said frame in side-by-side relation to said bedroll to define a nip therebetween, means for rotating said retard roll at a surface speed slower than said predetermined surface speed, cutoff means operably associated with said bedroll for providing web segments to sequentially advance toward said nip, and vacuum port means in each of said rolls arranged and contructed to transfer the leading edge portion of a web segment from said bedroll to said retard roll, second vacuum port means in said bedroll rearward of the first-mentioned vacuum port means adapted to urge a trailing portion of said web segment against said bedroll when said leading portion is transferred to said retard roll, valve means operably associated with said bedroll for sequentially de-actuating the first-mentioned bedroll vacuum port means and said second vacuum port means, and recess means in the surface of said bedroll between said first-mentioned bedroll vacuum port means and said second vacuum port means for accommodating the slack in said web segment developed by the leading portion traveling slower than the trailing portion thereof.

2. The structure of claim **1** in which a second retard roll is provided below the first-mentioned retard roll so that the slack developed in said web segment is removed from said recess means by gravity.

3. The structure of claim **1** in which means are provided on said frame for adjustably-positioning said retard roll relative to said bedroll for defining the nip therebetween.

References Cited

UNITED STATES PATENTS

3,338,575 8/1967 Nystrand et al. ------- 270—59

EUGENE R. CAPOZIO, Primary Examiner

P. V. WILLIAMS, Assistant Examiner

U.S. Cl. X.R.

270—39, 46