Nov. 20, 1928. 1,692,551

B. H. HARRIS

THERMOMETER

Filed Nov. 15, 1926

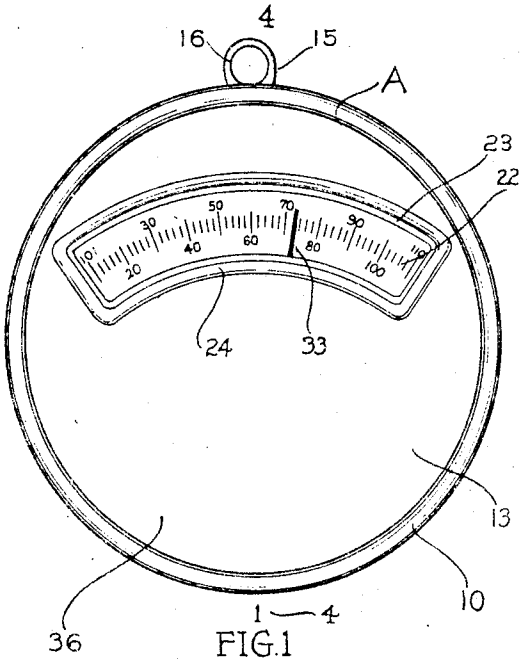

FIG.1

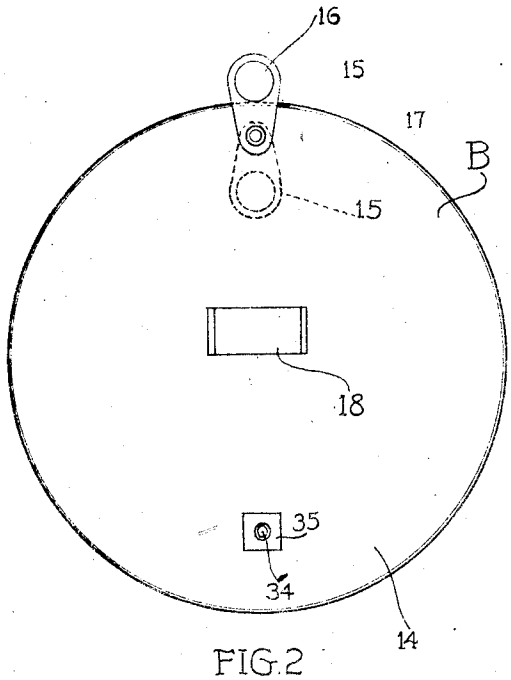

FIG.2

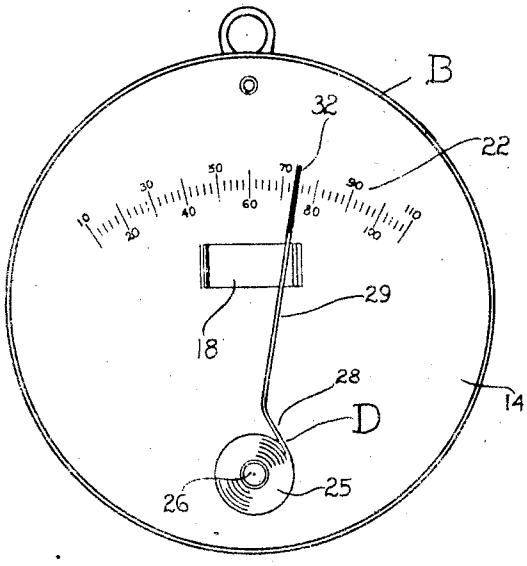

FIG.3

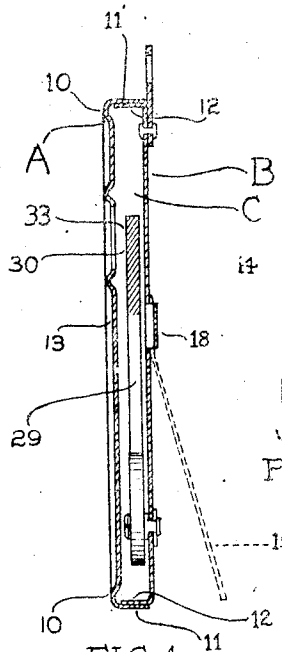

FIG.4

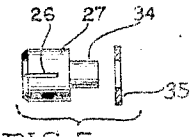

FIG.5

Inventor

Blaine H. Harris

By Howard Finch

Attorney

Patented Nov. 20, 1928. 1,692,551

UNITED STATES PATENT OFFICE.

BLAINE H. HARRIS, OF ST. PAUL, MINNESOTA, ASSIGNOR TO BROWN & BIGELOW, OF ST. PAUL, MINNESOTA, A CORPORATION OF MINNESOTA.

THERMOMETER.

Application filed November 15, 1926. Serial No. 148,477.

My invention relates to a thermometer wherein it is desired to provide a simple, inexpensive structure which is adapted to indicate the temperature. A feature of the invention resides in a two piece metal case wherein one portion forms the front and the other the back of the thermometer.

My invention also includes a particular form of thermo unit wherein the unit is adjustably supported, and one end of the unit extends in a manner to provide a temperature indicating hand.

This invention also includes a thermometer wherein the casing is cut away in a manner to disclose in a portion of the casing the gauge or graduation marks to indicate the temperature. The cut away portion of the casing is reinforced about the same to form a border of a rigid nature and also of a decorative design.

It is a feature of my invention to provide a disk-like thermometer having only a few parts and which is made in a very compact formation, the operating thermo unit of the same being enclosed and protected by the casing, and a loop being provided which is pivotally supported by the casing in a manner so that the loop can be turned out of operating position when it is not desired for use, and when it is in use, the loop may be turned up to project from one side of the casing so that the thermometer can be hung up by the loop.

These features, together with other details and features of the invention will be more clearly and fully set forth in the specification and claims.

In the drawings forming a part of this specification:

Figure 1 is a front view of my thermometer.

Figure 2 is a back view of my thermometer.

Figure 3 is a front view of a portion of my thermometer, the front casing part being removed.

Figure 4 is a central cross section of Figure 1.

Figure 5 illustrates the pin and washer nut for adjustably supporting the thermo unit.

In my drawings I have indicated a thermometer having a casing formed with a front portion A and back portion B, each of which are of disk-like construction, and the portion B is adapted to frictionally fit within the portion A.

The front portion A of the casing of my thermometer is of a disk-like nature and is provided with an annular marginal bead 10 extending in a ring-like formation about the same, adapted to provide a decorative and reinforced means for the outer edge of the front portion A. Extending backward from the bead 10 I provide a flange 11 of a cylindrical nature.

The back portion B of my thermometer is made up of a disk-like member on which is formed an annular cylindrical flange 12 which is adapted to frictionally engage with the inner surface of the annular flange 11 on the front portion A. Thus when the portions A and B are forced together with the flanges 11 and 12 engaging the front face or body 13 of the front A, they are spaced away from the back or body portion 14 of the back B to provide a chamber C between the portions 13 and 14.

The back portion B is provided with a supporting loop 15 which has an opening 16 and which is pivotally supported at 17 to the back B so that the loop 15 may rotate on the back B. This permits the loop to be turned into the position illustrated in Figure 2 in full lines, so that the thermometer can be hung up by the same, or the loop may be turned into the position illustrated in dotted outline in Figure 2 when it is not desired for use. Back B is also provided with a loop or strap portion 18 which is formed by cutting the body 14 in a manner to form a band-like strap 18 which projects from the back so that an easel support 19 may be secured to the back in place of using the loop 15. This easel 19 is illustrated in Figure 4 in dotted outline and is adapted to support the thermometer so that it can be set up if it is not desired to hang it up by the loop 15.

The chamber C between the front 13 and the back 14 provides a compartment for the thermo unit D which is of a peculiar formation and which is adapted to be operated by the atmospheric temperature to register upon the gauge 22, which is printed or formed on the inner face of the back 14 and which is visible through the opening 23. The opening 23 is formed in the front 13 and is of an arcuated nature being provided with a marginal bead 24 which reinforces the edge of opening 23 and provides a decorative border about the same.

The thermo unit D is formed of a thermo metal having a consistency which is readily effected to expand and contract according to the temperature in the atmosphere, and the unit is provided with a coil 25, the inner end of which is secured in a slot 26 of the pin 27. The outer end of the coil 25 extends with a tangential portion 28, and extending integral from the tangential portion 28 I provide an indicating hand 29. This indicating hand 29 is in reality the outer end of the coil 25, so that the thermo unit D consists of the coil 25, having a series of continuous convolutions extending one about the other, and terminating on the outer end of the indicating hand or pointer 29. The outer extreme end of the indicator 29 is colored at 30 with a red or other color to readily distinguish the indicator as associated with the gauge 22, so as to readily indicate the temperature by the end of the hand 29, which extends in close proximity with the gauge marks 22.

The extreme end 32 may if desired be formed with a pointed hand by twisting and cutting to a point the extreme end of the colored portion 30 of the hand 29. However, the thin flat nature of the metal which makes up the thermo unit D may extend edge-wise as indicated in Figure 1 and Figure 3, or the flat side of which is indicated in Figure 4, so as to provide a thin indicating hand 33 as illustrated in Figure 1.

The pin 27 which is provided with a slot 26 for receiving the inner end of the coil 25 is formed with a shank portion 34 which extends through the back 14, and by means of the washer lock nut 35, which extends over the shank, the pin 27 is held frictionally engaging the back 14. The outer end of the shank 34 is upset against the nut 35 sufficiently to lock the nut 35 rigidly to the shank 34. Thus when nut 35 is engaged, the shank 34 and the pin 27 can be rotated. This provides a structure facilitating the adjustment of the thermo coil D in a manner so that the indicating hand 29 can be set in a proper position to move the thermo unit D to indicate the proper temperature in the atmosphere wherein the same is placed.

In the manufacture of these thermometers, it is obvious that when they are put together, they should be properly set to indicate the temperature. This is readily accomplished by the adjustable thermo unit D which is rotated in a manner so that the hand 29 would be properly set in relation to the gauge marks 22, to properly indicate the temperature.

In this manner I provide a very simple thermometer having a small number of parts, which is easily adjustable, and which can be readily put together in an economical manner, having all of the delicate thermometer parts protected between the casing, and providing a disk-like construction having an attractive front design with the indicating hand of the thermometer visible through the opening 23 to readily indicate the temperature in the atmosphere.

The opening 23 is in the front face 13, while the hand operates in the chamber or compartment C and is in close proximity to the back 14, adjacent the gauge marks 22, so that the appearance of the thermometer is greatly improved by the construction and the spacing of the front and back away from each other with a recess end opening 23 showing the gauge and indicating hand in the background. Thus I provide a thermometer of an attractive nature, appealing to the eye, and of a very durable and serviceable construction, yet of a low cost, and particularly adapted for advertising purposes, having a large frontal space 36 for display directly below the opening 23.

In accordance with the patent statutes I have described the principles of operation of my thermometer, and while I have illustrated the particular construction and formation of the same, I desire to have it understood that this is only suggestive of a means of carrying out my invention, and that same may be applied to other use, and carried out by other means of construction without departing from the spirit of my invention, within the scope of the following claims.

I claim:

1. A thermometer comprising front and back telescoping members of sheet metal adapted to form a casing, a thermo unit secured to said back member between said members, said back member having gauge marks thereon, an indicating finger integral with the thermo unit and cooperating with said gauge marks to indicate the temperature and said front member having an opening formed therein providing a window to disclose the relation between the indicating finger of said thermo unit and said gauge marks.

2. A portable thermometer including a pair of disk members, one of which forms the front thereof, and the other the back, said front member having an annular marginal bead formed therein and an opening in said front member, a marginal reinforcing bead formed about said opening, and a metallic thermo unit positioned between said members, and including an indicating hand adapt-

ed to be disclosed through said opening to indicate the temperature.

3. A themometer comprising front and back members of sheet material adapted to form a casing, a thermo unit secured to said back member between said members, said back member having gauge marks thereon, an indicating finger operable with said thermo unit, and cooperating with said gauge marks to indicate the temperature, and said front member having a window to disclose the relation between the indicating finger on said thermo unit, and said gauge marks.

BLAINE H. HARRIS.