(No Model.)

J. McAVRY.

WEED TURNER.

No. 456,053. Patented July 14, 1891.

FIG. 1.

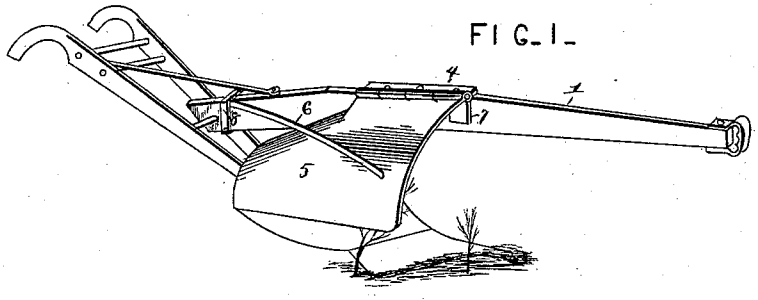

FIG. 2

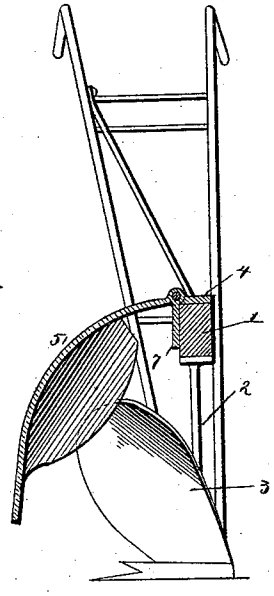

FIG. 3.

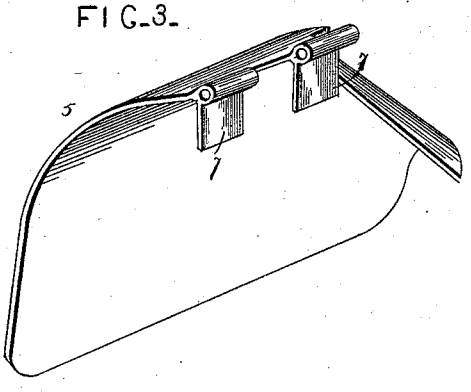

Witnesses
Geo. E. Frech.
Wm. Bagger

Inventor
Joseph McAvry.

By his Attorneys,
C. A. Snow & Co.

THE NORRIS PETERS CO., PHOTO-LITHO., WASHINGTON, D. C.

UNITED STATES PATENT OFFICE.

JOSEPH McAVRY, OF ODON, INDIANA.

WEED-TURNER.

SPECIFICATION forming part of Letters Patent No. 456,053, dated July 14, 1891.

Application filed October 31, 1890. Serial No. 369,889. (No model.)

To all whom it may concern:

Be it known that I, JOSEPH McAVRY, a citizen of the United States, residing at Odon, in the county of Daviess and State of Indiana, have invented a new and useful Weed-Turner, of which the following is a specification.

This invention relates to weed-turning attachments for plows; and it has for its object to provide a device of this class which shall be simple in construction, which may be readily attached to plows of ordinary construction, and which shall readily adapt itself to any obstructions that may be encountered, thereby avoiding danger of breakage, and which, after such obstructions have been passed, shall be restored to operative position speedily and automatically.

With these ends in view the invention consists in the improved construction, arrangement, and combination of parts, which will be hereinafter fully described, and particularly pointed out in the claim.

In the drawings hereto annexed, Figure 1 is a perspective view showing a plow to which my invention has been applied. Fig. 2 is a transverse sectional view of the same. Fig. 3 is a perspective view of the shield or weed-turner detached.

Like numerals of reference indicate like parts in all the figures.

The plow to which my invention is applied may be of any desired construction.

In the drawings, 1 designates the beam, 2 the standard, and 3 the plow-blade. Suitably attached to the upper side of the beam is a bracket 4, to the outer edge of which is hinged a shield or fender 5, which constitutes the weed-turner. The said shield or fender is funnel-shaped or tapering from the front toward the rear end, so that it will readily engage any trash, weeds, and stubble that may be encountered, and press the same in the direction of the mold-board of the plow, so that the furrow-slice which is to be turned over will completely cover the same. A spring 6, suitably attached to the plow-beam, is arranged to press against the outer side of the shield 5, which is thereby retained in its operative position, but in such a manner that it may readily yield in an upward direction to any obstructions—such as stones or stumps—that it may encounter, the said spring serving to restore it to operative position as soon as such obstructions have been passed.

The normal position of the shield or weed-turner 5 is at a short distance from the outside of the mold-board, and to prevent it from being pressed into contact with the latter I provide the said shield at its hinged upper edge with arms or braces 7, which are formed at an angle thereto, and which normally rest or bear against the side of the beam, thus sustaining the weed-turner in the proper position for operation, and holding it when the plow is out of the ground.

My improved weed-turning attachment is in practice constructed of sheet-iron, making it light and durable, and it is capable of being applied to any plow of ordinary construction, the bracket 4 carrying the hinged shield being attached to the plow-beam by means of screws or bolts or in any convenient manner. The spring 6 may be an ordinary flat steel spring, and it may be secured to the beam by means of a clamp or clevis of ordinary construction, such as shown at 8.

Having thus described my invention, I claim and desire to secure by Letters Patent of the United States—

In a weed-turning attachment for plows, the combination of a bracket adapted to be attached to the plow-beam, a shield hinged to the said bracket and provided at its hinged edge with lugs or braces adapted to rest against the side of the plow-beam, and a spring arranged to press the said shield in the direction of the mold-board of the plow, substantially as set forth.

In testimony that I claim the foregoing as my own I have hereto affixed my signature in presence of two witnesses.

JOSEPH McAVRY.

Witnesses:

WM. H. KEPLER,

I. G. BIRDWELL.