(No Model.)

2 Sheets—Sheet 1.

# J. H. NUTTING.

## CULTIVATOR.

No. 274,962. Patented Apr. 3, 1883.

Fig. 1.

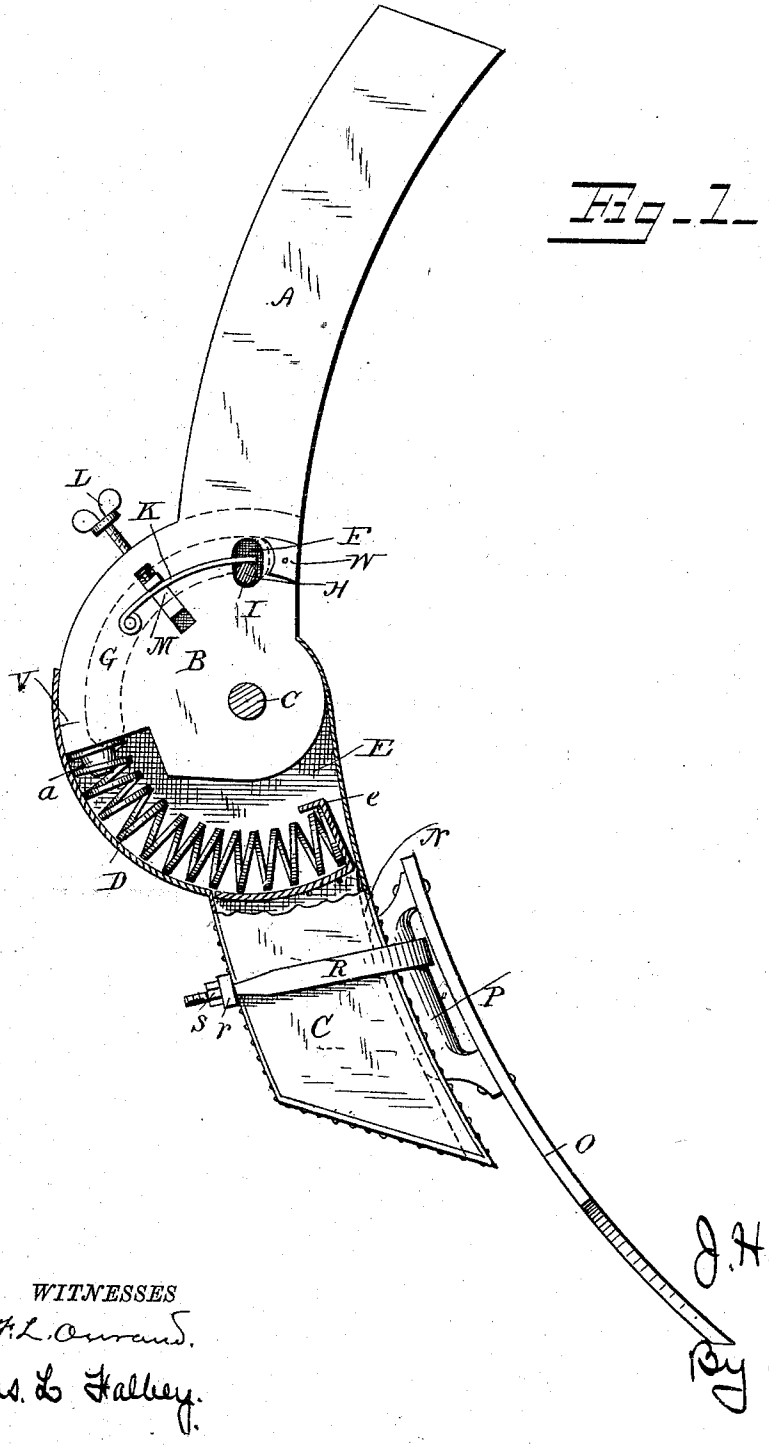


WITNESSES

F. L. Ourand.

Jas. L. Halley.

J. H. Nutting.

INVENTOR

By H. J. Ennis

Attorney

N. PETERS. Photo-Lithographer. Washington, D. C.

(No Model.) 2 Sheets—Sheet 2.

# J. H. NUTTING.

## CULTIVATOR.

No. 274,962. Patented Apr. 3, 1883.

Fig. 2.

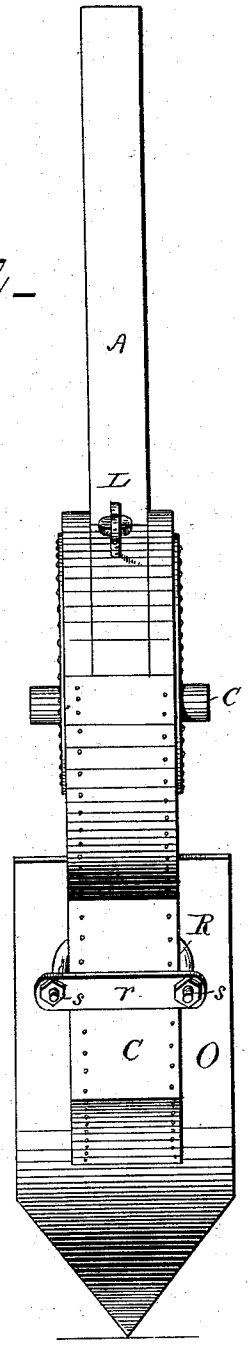


WITNESSES
W. A. Craig
Jas. L. Halbert

J. H. Nutting
INVENTOR
By H. J. Ennis.
Attorney

N. PETERS, Photo-Lithographer, Washington, D. C.

# UNITED STATES PATENT OFFICE.

JAMES H. NUTTING, OF CALLISBURG, TEXAS.

## CULTIVATOR.

SPECIFICATION forming part of Letters Patent No. 274,962, dated April 3, 1883.

Application filed February 5, 1883. (No model.)

*To all whom it may concern:*

Be it known that I, J. H. NUTTING, a citizen of the United States, residing at Callisburg, in the county of Cooke and State of Texas, have invented certain new and useful Improvements in Plows and Cultivators, of which the following is a specification, reference being had therein to the accompanying drawings.

My invention has relation to plows, cultivators, and like agricultural implements; and its object is to so construct the standard that when the point or tooth strikes an obstruction the point will give, so as to prevent the parts breaking, and after the obstruction is passed the parts will readjust themselves and assume their former position; and to that end the novelty consists in the construction of the same, as will be hereinafter more fully described, and particularly pointed out in the claims.

Figure 1 in the drawings is a side elevation partly in section, illustrating my invention; and Fig. 2, a rear view of the same.

A is the shank or standard, the upper part of which is secured to the beam or frame in the usual manner, while the lower part terminates in an enlarged sector-shaped portion, B.

C is the extension, and is hinged to the shank A by the bolt *c*.

D is a spiral spring, which is located in the hollow box E of the extension C, one end being confined in the shoe *e*, and the other in contact with the pin *a* on the standard A, so that the tendency of the spring is to keep the parts in the position shown in Fig. 1.

F is a slot in the standard A.

G is a curved slot in the standard A, as shown, and the forward end of this slot and the upper end of the slot F coincide, and through them at this point is passed a pin, H, which, in its normal position, is forced into a recess, I, in the slot G by means of the spring K, the tension of which is adjusted by the screw L, acting on the dog M. It will thus be seen that when the pin H is held in the recess I the standard A and its extension C are comparatively rigid; but if undue force were applied to C, then the pressure would overcome the resistance of the pin H in the recess I and the extension C would give way, and when the unusual force were removed the spring D would force the parts back to their normal position. The face of the extension C is provided with a vertical groove, N, and the plow-point or cultivator-tooth O has a yoke, P, the body of which is rounded to fit the groove N, and is adjustably secured in place by the strap R, passing around the extension C, and having the clamp *r* and nuts *s*.

It will readily be seen from the above that the point or tooth O can be vertically adjusted on the standard, and any degree of "sheer" or lateral inclination given it by means of the rounded yoke P in the groove N.

The break-pin H and dog M extend through the slot G on each side of the standard A, and a spring, K, is located on each side thereof in the frame E, only one being shown in Fig. 1. These springs K equalize the pressure on the break-pin H and keep it firmly to its work.

The slot G is formed by two separate sections joined at V, the upper section being in combination with a shield or fender which is placed on the side of the frame E of the extension C.

W is a follower in the slot G, located one on each side of the standard A, and combined with the standard A. It will be seen that when the slot G is performing its rotary motion the followers W pass along through the slot, clearing out the particles that might otherwise interfere with the working of the machinery.

Having thus described my invention, what I claim as new and useful, and desire to secure by Letters Patent of the United States, is—

1. The standard A, having the slot F and the enlarged portion B, in combination with the hollow box E, the spring D, follower W, and extension or shovel-block C, as set forth.

2. The standard A, slot F, and extension B, in combination with the pin H, springs K, screw L, and shovel-block C, having spring D, as set forth.

In testimony whereof I affix my signature in presence of two witnesses.

JAMES H. NUTTING.

Witnesses:

C. N. MILLER,

C. H. SMITH.