United States Patent [19]

Calder

[11] 3,831,862

[45] Aug. 27, 1974

[54] SPRAY TIP

[75] Inventor: Oliver J. Calder, Orange, Calif.

[73] Assignee: Airless Spray Tip Manufacturing Co., Orange, Calif.

[22] Filed: Apr. 11, 1973

[21] Appl. No.: 350,184

[52] U.S. Cl. 239/526, 239/600

[51] Int. Cl. B05b 7/02

[58] Field of Search 239/271, 276, 600, 428.5, 239/525, 526; 169/15

[56] References Cited

UNITED STATES PATENTS

2,621,076	12/1952	Barton	239/526
3,700,174	10/1972	Beck	239/526

FOREIGN PATENTS OR APPLICATIONS

1,487,141	5/1967	France	239/600

Primary Examiner—Lloyd L. King

Attorney, Agent, or Firm—Robert E. Strauss

[57] ABSTRACT

There is disclosed an improvement for mounting of a spray orifice in a pressured liquid spray system in which the orifice is carried by a plug member that fits into a tubular housing and locks therein by a sliding bolt action. The plug can be removed and reversed in its position to permit pressured cleaning of obstructions from the orifice. Preferably, a plurality of plugs are provided with different spray orifices to permit a rapid interchanging of the orifice with other orifices having different spray capacities and/or characteristics.

10 Claims, 3 Drawing Figures

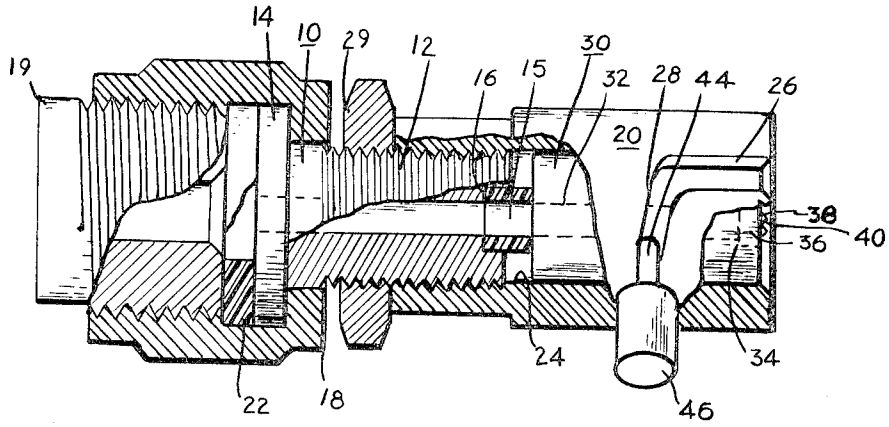

FIGURE 1

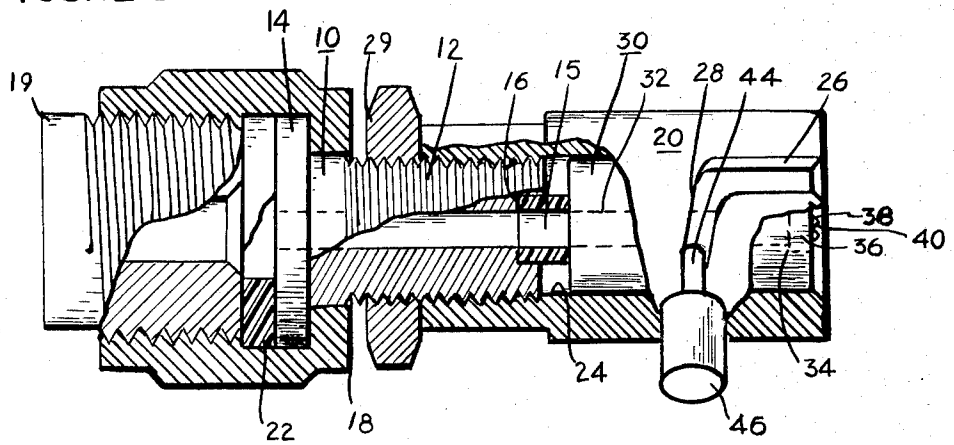

FIGURE 2

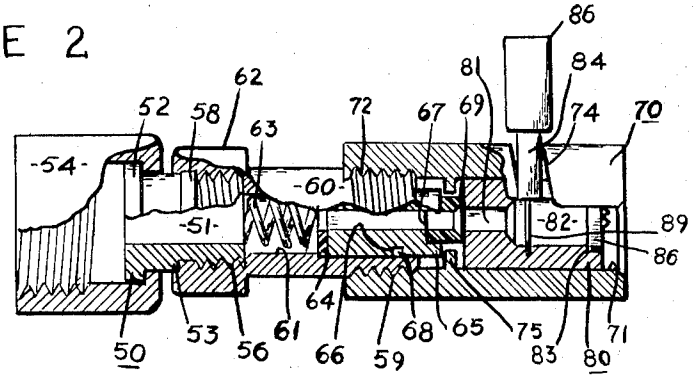

FIGURE 3

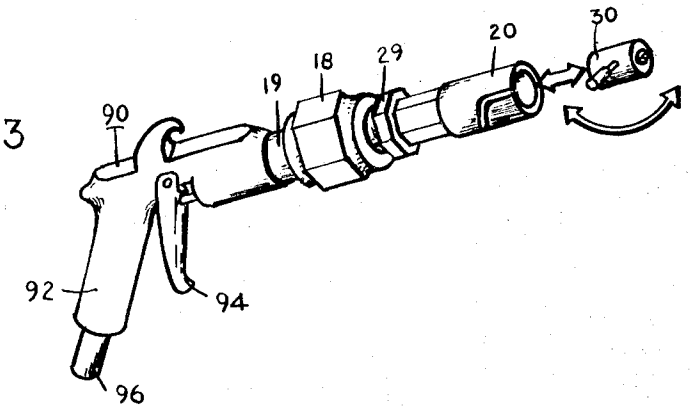

SPRAY TIP

DISCLOSURE OF THE INVENTION

This invention relates to pressured spray systems and, in particular, relates to an improved means for mounting an orifice in a pressured liquid spray system.

BACKGROUND OF THE INVENTION

A major difficulty with all pressured liquid spray equipment presently in use is that solids in the liquid are forced into the spray tip orifice and are trapped there, clogging the orifice. A common solution to the problem in airless spray equipment is to mount the spray tip in a rotatable housing so that it can be rotated and the pressure of the liquid can be applied to blow the obstruction from the clogged orifice. The orifice is usually mounted in a turret member in the shape of a cylinder or ball which is rotatably mounted in the spray tip housing. In most units, the orifice is permanently mounted in the turret member and replacement of the orifice requires the replacement of the turret member and associated sealing members. This construction generally encumbers the design of the sprayer and prevents the simple interchanging of orifice tips.

It is, therefore, desirable to provide a means for mounting an orifice in a spray system which permits the rapid and facile reversal of the orifice for cleaning and interchange of orifices of different spray characteristics.

BRIEF STATEMENT OF THE INVENTION

I have now invented an improved means for mounting of a spray orifice tip in a pressured spray system. The improved means comprises a plug member having a longitudinal passageway and bearing the spray orifice tip at its dischare end. The plug bears a radial pin and is mounted in a L-shaped slot of a tubular housing in a bolt-like mounting with its inward end bearing against a resilient seal that is carried by the discharge end of an adapter assembly that mounts to the pressured liquid supply line. The pin means is preferably carried at the middle of the plug so that the plug can be easily reversed, end-for-end, in the housing to blow obstructions from the orifice. A plurality of plugs, each bearing orifices of different flow and/or spray characteristics can be provided to permit rapid and facile interchanging of spray orifice tips.

BRIEF DESCRIPTION OF THE DRAWINGS

The presently preferred embodiments of the invention are shown in the drawings of which:

FIG. 1 illustrates a first embodiment of the invention;

FIG. 2 illustrates a second embodiment of the invention; and

FIG. 3 illustrates the reversal of a spray orifice tip.

DESCRIPTION OF PREFERRED EMBODIMENTS

Referring now to FIG. 1, the invention is shown as comprising a generally tubular adapter member **10** which has a central, longitudinal bore **12** with an annular flange **14**. The member **10** is threaded and bears, at its opposite end, a resilient seal **15** which can be of Nylon, Deldrin, rubber, etc., and which is in the form of a sleeve that is mounted in a counterbore **16**.

The flange **14** is surrounded by a conventional cap **18** that is provided with female threads to permit its attachment to the threaded nipple **19** of the pressured liquid supply which is typically the discharge of a spray gun. A gasket **22** is used to seal between the faces of flange **14** and nipple **19**.

The member **10** is turned into the end of a generally tubular housing **20** and terminates therein. The housing has a longitudinal bore **24** which is tapped at one end with female threads to permit its removable mounting on member **10**. The opposite end of the housing **20** has a generally L-shaped slot with leg **26** extending longitudinally from the outboard edge of the housing and leg **28** extending circumferentially through an arc from about 75° to about 135°, preferably about 90°. The leg **28** also extends slightly inwardly at an angle of about 1 to about 10, preferably about 5°.

Member **10** supports a conventional nut **29** turned thereon which serves as a lock nut to secure housing **20** against loosening on member **10**. Other conventional lock means can be used for this purpose.

The open end of housing **20** supports a plug member **30** which has a diameter permitting its free movement in bore **24**. Plug **30** has a central, longitudinal bore **32** which is counterbored at **34** and fitted with a conventional orifice spray tip **36**. The spray tip is commonly formed of a hard, abrasion-resistant material such as tungsten carbide with a minute bore having a diameter from about 0.010 to about 0.035 inch. The discharge face of the tip bears a convex dome **38** which is cut at **40** to provide the desired fan-shaped spray. The spray tip **36** can be removably fitted in the counterbore, e.g., by threads, or can be permanently secured by brazing.

Plug **30** also bears bolt means in the form of pin **44** and handle **46**. The pin is preferably mounted at the middle of plug **30** so that the distances to each end of the plug are equal. The pin is of a diameter permitting it to be moved through legs **26** and **28** of the L-shaped slot in housing **20**. When the pin is moved into its extended position in leg **28**, as shown, the inboard end of the plug **30** is biased against resilient seal **15** in a fluid-tight relationship. In this position, bores **12** and **32** provide a continuous flow passageway for liquid from the end of nipple **20** to orifice tip **36**.

FIG. 2 illustrates an embodiment of the invention which has a floating piston seal. This embodiment has an adapter **50** having a central, longitudinal bore **51** and a flange **52** that is surrounded by a conventional cap **54**. The shank **53** of adapter **50** is threaded at **56** and has an annular groove in which is mounted a square O-ring **58**. A generally tubular member **60**, with a central, longitudinal bore, and a base **62** bearing wrench flats is turned onto the threaded end of shank **53**. The opposite end of member **60** is provided with male threads **59**. The central bore **61** is of slightly larger diameter than bore **51** and resilient compression spring **63**, washer **64** and piston **65** are slidably mounted in bore **61**. Spring **63** bears against the end face of adapter **50** and biases piston **65** outwardly.

Piston **65** has an annular groove **66** in which is mounted O-ring **68**. The central bore of piston **65** is counterbored at **67** and a resilient cylindrical seal **69** is mounted in the counterbore **67**.

Housing **70** which has a central bore **71** that is provided with female threads **72** is turned onto the threaded end of member **60**. The opposite end of hous-

ing 70 bears a generally L-shaped slot having a longitudinal leg, partially shown, and a circumferential leg 74, similar to the slot described in regard to FIG. 1. An annular rim 75 is provided at an intermediate position along bore 71.

A plug member 80 is slidably and rotationally positioned in bore 71 and this plug has a central, longitudinal bore 81 and counterbore 82. An annular groove 83 is milled in the end of counterbore 82 and a conventional carbide orifice spray tip 86 is mounted in the groove and secured therein, preferably by brazing.

The plug 80 also bears bolt means in the form of pin 84 and handle 88. The pin is fitted in a radial bore in plug 88. A thin pin or wire 99 is transversely mounted in counterbore 82 to prevent the danger of a high pressure jet when the plug is removed. Pin 84 is of a diameter permitting it to be moved through the L-shaped slot. As the pin moves inwardly along the slot, it urges the inward face of plug 80 into contact with seal 69 until, when the pin is seated at its maximum travel in the slot, the seal 69 is biased against the inward face of plug 80 by the tension of spring 63. When plug 80 is removed, the spring is released, however, piston 65 is restrained by annular rim 75 from discharge under the force of spring 63 or the liquid line pressure, should the sprayer valve be opened while the plug 80 is removed from the assembly.

Pin 84 is preferably mounted near the middle of plug 80 so that the plug 80, when reversed end-for-end, will bear against seal 69 in a sealing relationship. Because of the axial compressibility of spring 69, an exact centering of pin 84 is not necessary, however.

FIG. 3 illustrates the reversal of a orifice spray tip. In this illustration, a spray gun 90 of conventional design with handle 92 and trigger 94 receives a supply of pressured liquid from hose or conduit 96. The discharge end of the gun bears a threaded nipple 19 on which is turned cap 18 to secure the spray tip assembly to the gun. The illustrated assembly is that shown in FIG. 1 having a tubular housing 20 which is locked to the adapter by lock nut 29. As shown in the drawing, the plug 30 can be removed from the assembly and reversed, end-for-end, and reinserted into the assembly. This will reverse the position of the orifice tip and will permit the application of liquid pressure from the gun to the orifice in a reverse direction to clear any obstructions from the orifice.

Any of a plurality of plugs similar in shape and dimensions to plugs 30 and 80 can be interchanged in their respective housings. The plugs can be fitted with orifice spray tips which have orifices of different shapes or dimensions, e.g., different diameter bores. This will provide a quick and simple means for the switching of orifice spray tips in the gun to alter the capacity of the gun. Similarly, spray tips having differently shaped orifices for varied spray patterns can also be interchanged.

The invention has been described with reference to the presently preferred embodiments that are shown in the illustrations. It is not intended that the invention by unduly limited by the illustration of the preferred embodiments. Instead, it is intended that the invention by defined by the means, and their obvious equivalents set forth in the following claims.

I claim:

1. An improved spray means for a pressured liquid which comprises:

a. a generally tubular adapter having a longitudinal through passageway with inlet and discharge ends;

b. means for connecting the inlet end of said adapter to a conduit supply of a pressured liquid;

c. resilient seal means carried at the discharge end of said tubular adapter;

d. a generally tubular housing surrounding and secured to said adapter with the discharge end of said adapter terminating within said housing;

e. a generally L-shaped slot means with a first leg thereof extending longitudinally from the leading edge of said housing and the other leg thereof extending chiefly circumferentially and slightly rearwardly through an arc of about 75° to about 135°;

f. a plug member comprising a cylindrical body having a longitudinal through passageway, a generally uniform diameter and free of peripheral obstructions, thereby permitting the insertion of either end thereof into the open end of said housing;

g. orifice means carried by said plug member at the discharge end of said longitudinal through passageway of said plug member; and

h. pin means carried at a mid-point along the length of said plug member and positioned thereon to travel in said slot means and bias the inward end of said plug means against said resilient seal means whereby said plug member can be reversed between end-to-end positions in said housing and biased against said seal means in both such positions.

2. The improved spray means of claim 1 wherein said tubular adapter bears an annular flange about its inlet end with a threaded cap slidably mounted thereon for securing said spray means to the discharge of a spray conduit.

3. The improved spray means of claim 1 including means to lock said housing to said adapter.

4. The improved spray means of claim 1 wherein said resilient seal means is carried by a piston having a longitudinal through passageway and slidably mounted in the longitudinal bore of said adapter with spring means to bias said piston against the inward face of said plug member.

5. The improved spray means of claim 4 wherein said adapter is formed by an assembly of two generally coaxial tubular members with said spring means bearing against the inward face of the first of said tubular members and biased against the inward face of said piston that is carried at the discharge end of the longitudinal bore of the second of said tubular members.

6. The improved spray means of claim 4 wherein said housing has an annular rim at an intermediate position along its longitudinal bore to engage and restrain said piston from discharge from the assembly when said plug member is removed therefrom.

7. The improved spray means of claim 1 wherein said orifice means comprises a flat body of an abrasion-resistant material having a centrally-positioned, raised dome bearing a radial groove on its discharge face with a central bore of a minute diameter extending through said flat body and intersecting said radial groove.

8. The improved spray means of claim 7 wherein said plug means is counterbored at its discharge end with a bore of slightly greater diameter than said longitudinal

passageway therethrough and said orifice means is mounted in said counterbore.

9. The improved spray means of claim 1 wherein pin means are transversely mounted in said longitudinal through passageway of said plug member.

10. The improved spray means of claim 1 wherein said other leg of said slot extends rearwardly at a slight angle, from 1° to about 10°.

* * * * *