(No Model.) 3 Sheets—Sheet 1.

A. SIEGEL.

BOTTLE LABELING MACHINE.

No. 541,575. Patented June 25, 1895.

Fig. 1.

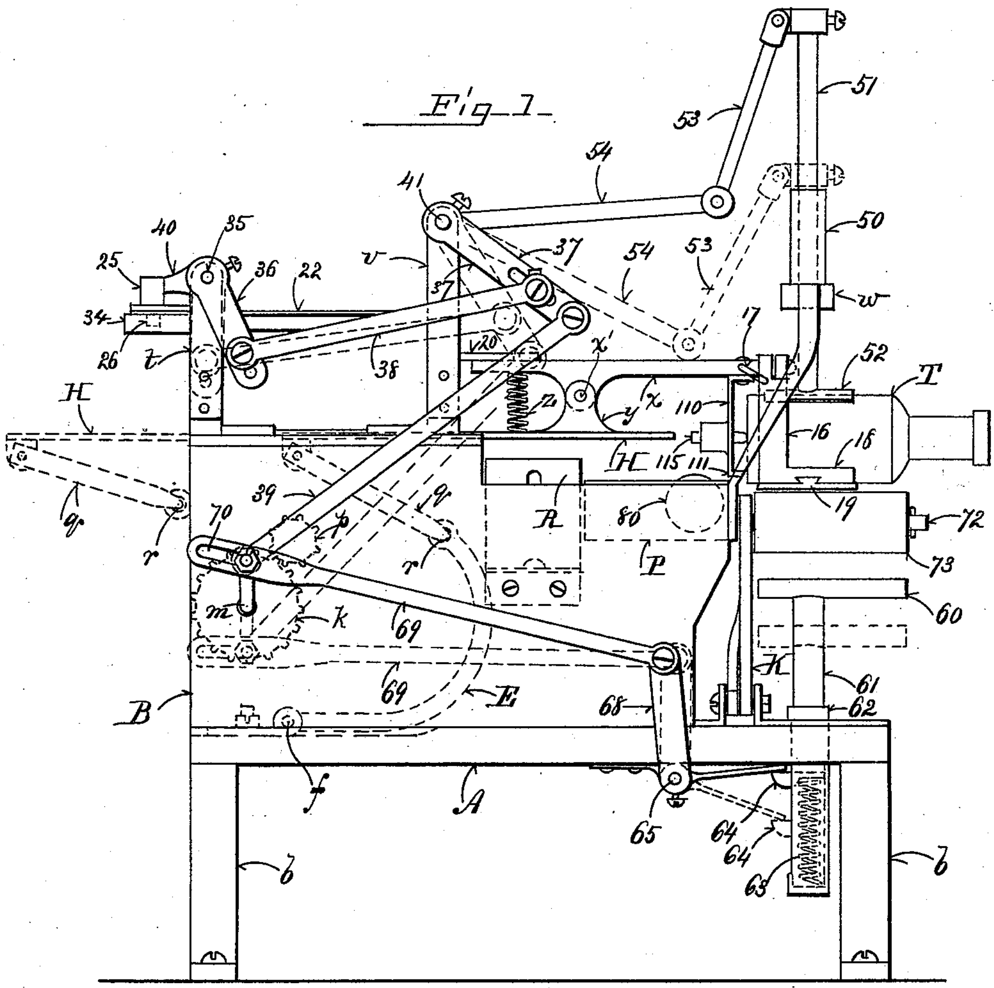

Fig. 9.

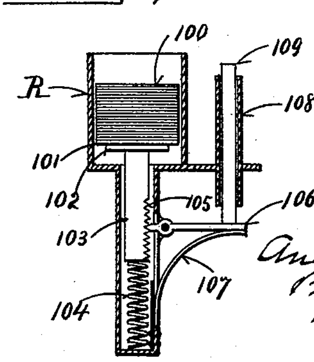

Witnesses:
[illegible signature]
[illegible signature]

Inventor:
Andrew Siegel,
By C. A. Shaw & Co.
Attys.

THE NORRIS PETERS CO., PHOTO-LITHO., WASHINGTON, D. C.

(No Model.)

3 Sheets—Sheet 2.

A. SIEGEL.

BOTTLE LABELING MACHINE.

No. 541,575. Patented June 25, 1895.

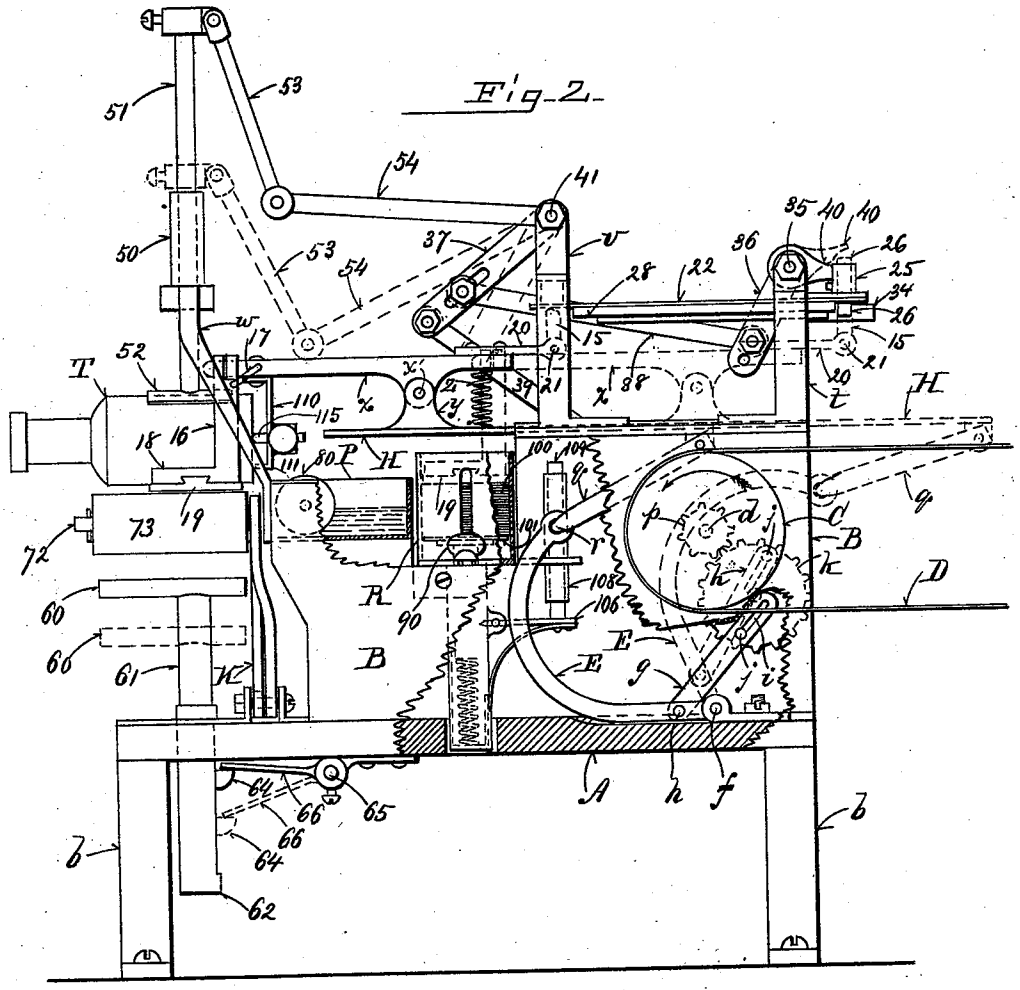

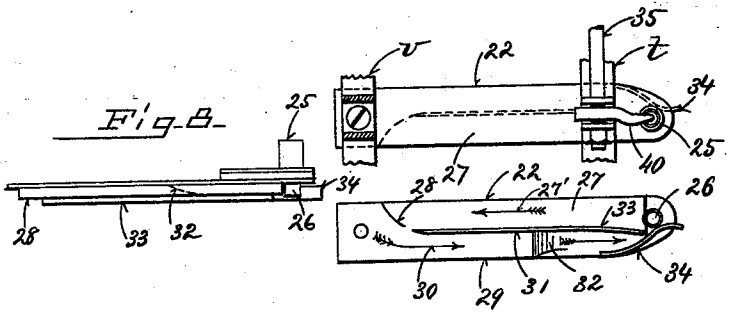

WITNESSES:
A. C. Draper
E. W. Arthur

INVENTOR:
Andrew Siegel
By C. A. Shawkey
Atty.

THE NORRIS PETERS CO., PHOTO-LITHO., WASHINGTON, D. C.

(No Model.) 3 Sheets—Sheet 3.

A. SIEGEL.

BOTTLE LABELING MACHINE.

No. 541,575. Patented June 25, 1895.

Fig. 3

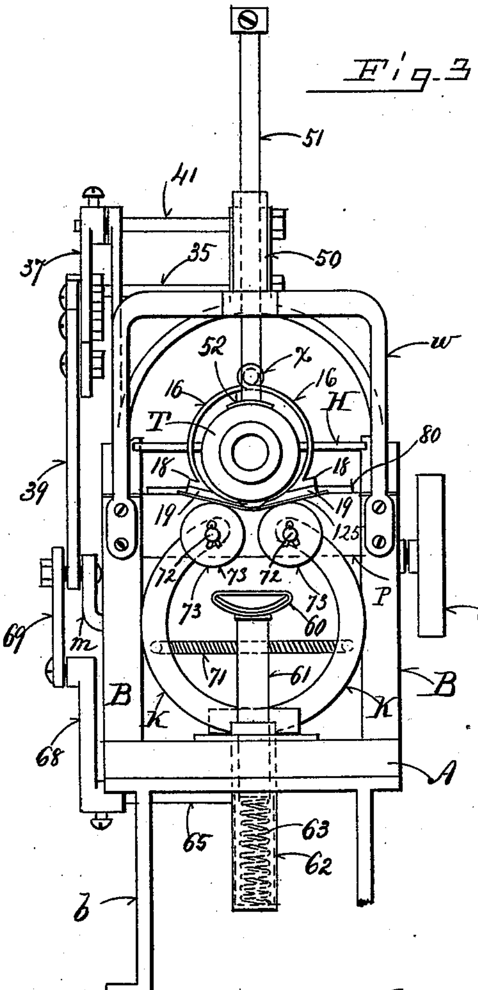

Fig. 4

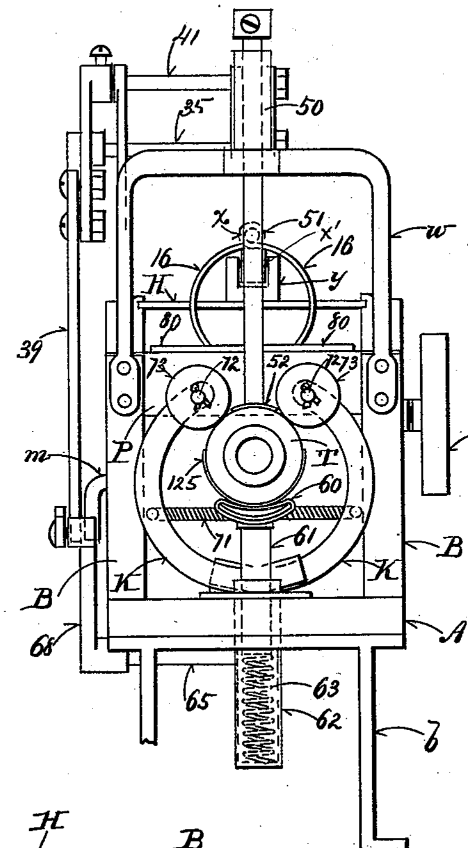

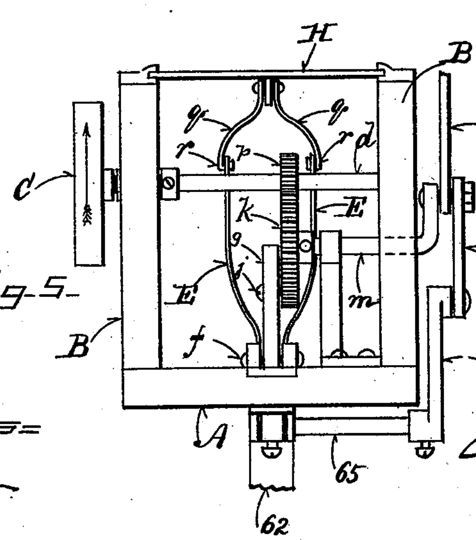

Fig. 5

Witnesses=
K. Durfee
C. W. Walker

Inventor=
Andrew Siegel
By C. A. Shaw & Co.
Attys.

THE NORRIS PETERS CO., PHOTO-LITHO., WASHINGTON, D. C.

UNITED STATES PATENT OFFICE.

ANDREW SIEGEL, OF BOSTON, MASSACHUSETTS, ASSIGNOR OF ONE-HALF TO FRED HAUSMANN, OF SAME PLACE.

BOTTLE-LABELING MACHINE.

SPECIFICATION forming part of Letters Patent No. 541,575, dated June 25, 1895.

Application filed May 31, 1894. Serial No. 513,055. (No model.)

To all whom it may concern:

Be it known that I, ANDREW SIEGEL, of Boston, in the county of Suffolk, State of Massachusetts, have invented certain new and useful Improvements in Bottle-Labeling Machines, of which the following is a description sufficiently full, clear, and exact to enable any person skilled in the art or science to which said invention appertains to make and use the same, reference being had to the accompanying drawings, forming part of this specification, in which—

Figure 1 is a side elevation of my improved bottle-labeling machine; Fig. 2, an elevation of the side opposite that shown in Fig. 1, a portion of the frame being broken away; Fig. 3, a front elevation showing the bottle entering the labeling-jaws; Fig. 4, a like view showing the position of the parts after the bottle has passed through said jaws; Fig. 5, a rear end elevation, the portions being broken away; Fig. 6, a top plan view of a cam-plate employed in the device; Fig. 7, a bottom plan view of the same; Fig. 8, an edge elevation of the cam-plate, and Fig. 9 a sectional view of the label-box.

Like letters and figures of reference indicate corresponding parts in the different figures of the drawings.

My invention relates especially to a device for applying gummed labels to glass bottles; and it consists in certain novel features hereinafter fully set forth and claimed, the object being to produce a simple, cheap and effective device of this character.

The nature and operation of the improvement will be readily understood by all conversant with such matters from the following explanation.

In the drawings, A represents the bed of the machine which is supported on standards, *b*, and may be of any suitable form and construction. Running transversely of the bed and journaled in side-plates or standards, B, there is a rotary shaft, *d*, bearing a pulley, C, which is connected by a belt, D, with any suitable source of power. Between the standards, B, a vertically curved forked lever, E, is pivoted to the base, *f*. This lever, E, (see Figs. 2 and 5) is actuated by a pitman, *g*, having an end pivoted to said lever near its fulcrum at, *h*, and slotted in its opposite end at, *i*. A crank-pin, *j*, on a gear, *k*, journaled on a stub-crank shaft, *m*, works in said slot. This gear meshes with a pinion, *p*, on the drive shaft, *d*. In the tops of the standards in suitable ways a horizontally arranged carriage, H, is fitted to slide longitudinally of the machine. This carriage is actuated by a forked lever, *q*, pivoted centrally to said carriage and having its arms pivotally connected at, *r*, to the arms of the vertically curved lever, E.

Three arch bars, *t*, *v*, *w*, are mounted vertically on the standards, B, and support and guide the label carrying mechanism.

On the carriage, H, a lever, *x*, is pivoted at *x'* to swing vertically on a standard, *y*. The rear arm of this lever is pushed vertically by a spring, *z*, and at its extreme end bears a vertical finger, 15. Shown by dotted lines in Fig. 2. The opposite arm of the lever, *x*, carries the label carrying levers, 16. These levers are pivoted on said arm to swing in opposite directions and are tensioned by springs, 17, which force them toward each other. The arms of these levers curve laterally outward. Their lower ends are free and are provided with feet, 18, which project horizontally in front of said levers, said feet having laterally arranged dove-tailed grooves therein in which interchangeable label shoes, 19, are mounted. These shoes are thus arranged projecting forwardly from the levers, as shown. The finger, 15, on the rear arm of the lever, *x*, is carried by a bar, 20, pivoted to swing laterally a determined distance on said arm, said finger being pivoted at, 21, to swing vertically on said bar. The cam-plate, 22, is supported in horizontal position by the arch-bars, *t*, *v*, and is arranged longitudinally of the machine. On the rear end of said plate there is a vertically arranged socket or cylinder, 25, in which a stud, 26, is fitted to slide. This stud is adapted to be engaged by the cam finger, 15 as hereinafter described. The under face of the cam-plate has a track, 27, on which the cam-finger, 15, travels in the direction of the arrow 27' as the carriage, H, is advanced. When it reaches the end, 28, of said track it drops off therefrom and is thrown upward by the spring, *z*, elevating the lever arm. As the carriage, H, retreats the cam pin, 15, travels

in the direction of arrow, 30, on the track, 29, the lateral movement necessary to enter this track being permitted by the pivoted bar, 20. A partition, 31, divides the two tracks. At the rear end of track, 29, there is a vertically curved cam, 32, onto which the cam finger rides. The end, 33, of the partition, 31, is a spring. A curved guide plate, 34, (see Fig. 7)) directs the finger at the end of the rearward passage of the carriage, H, into engagement with the pin, 26, in the socket, 25. The spring, 33, yields to permit this. Said pin is thereby driven upward. On the rear arch-bar, *t*, a horizontal shaft, 35, is journaled. This shaft bears an arm, 40, which will engage the pin, 26, driving it downward and forcing the cam finger in like direction so that said finger can ride onto the rear end of the cam-track, 27, at a determined point in the movement of the carriage. The shaft, 35, bears on its outer end a crank, 36. A shaft, 41, is journaled on the arch bar, *v*, in suitable standards and in parallelism with the shaft, 35. The shaft, 41, has a crank, 37, at one end connected by a pitman, 38, with the crank, 36. A pitman, 39, connects the crank, 37, with the crank-shaft, *m*. These shafts, 35, and, 41, are rocked by the pitman, 39. Centrally in the arch-bar, *w*, in a guide-socket, 50, a plunger, 51, is fitted to slide vertically. This plunger is provided on its lower end with a laterally curved shoe, 52, conforming to the curve of the bottle which it is adapted to engage as hereinafter described. The plunger is actuated by a lever, 53, pivoted to its upper end the lower end of said lever being pivoted to an arm, 54, fast on the rock-shaft, 41. A table, 60, is mounted on a spindle, 61, in alignment with the plunger. Said spindle works in a socket, 62, mounted in the forward end of the bed, A, and rests on a spring, 63. The socket is slotted and a stud, 64, projects from the lower end of the spindle. A rock-shaft, 65, is journaled on the under side of the bed, A. This shaft bears an arm, 66, which engages the stud, 64, and will draw the spindle, 61, downward against the pressure of its spring. A crank, 68, is fast on the outer end of the shaft, 65, and is connected by a pitman, 69, with the crank-pin on the crank-shaft, *m*, said pitman being slotted at, 70, to receive said pin. This table, 60, forms a yielding resistance for engaging the outer face of the article to be labeled as it passes the label carrying shoes as hereinafter described.

On the bed, A, at the rear of the spindle, 61, tongs-levers, K, are pivoted to swing vertically and have their free ends pulled together by a spring, 71. The upper ends of these levers have horizontally projecting pins, 72, upon which rollers, 73, are mounted, said rollers normally projecting into the path of the plunger, 52.

A paste-box, P, is secured in the standards, B, directly behind the upper ends of the levers, K. A transversely arranged daubing roller, 80, is journaled in said box near its forward edge in position to be engaged by the label-shoes, 19, during the rearward passage of the carriage, H.

A label-box, R, is disposed directly behind the paste-box and is detachably held in the standards by a set-screw, 90, (see Fig. 2) so that boxes containing labels varying in size may be substituted. The mouth of the box is of sufficient size to receive the shoes, 19, of the label carrier. The labels, 100, rest in a stack on a plate, 101, within the box. Said plate rests on a plunger, 102, which slides in a tube, 103, and is pushed upward by a spring, 104. The shank of the plunger is toothed at, 105, to form a rack and a pawl, 106, pivoted to the tube, 103, engages said teeth. A flat spring, 107, holds the pawl elevated. On the box-support, a vertical tube, 108, is mounted. A pin, 109, slides in said tube and its lower end normally rests on the outer end of the pawl, 106. On the forward end of the label carrying lever, *x*, there is a pendent arm, 110. This arm carries a foot, 111, on its lower end which during a certain movement of the lever, *x*, will engage the pin, 109, forcing it downward sufficiently far to permit the spring, 104, to throw the plunger, 102, upward the distance of one tooth so that the labels may be carried into proper position to be engaged by the shoes, 19. In the arm, 110, there is a centering pin, 115, arranged longitudinally of the machine and in the center line between the label carrying levers, 16.

The operation of the device is as follows: The tank, P, being filled with paste and the label box, R, filled with labels power is applied to the machine driving the pulley, C, in the direction of the arrow in Fig. 2. The parts being in the position shown in Figs. 1, 2 and 3, a bottle, T, is inserted between the label carrying levers, 16, on the shoes of which a label, 125, (Fig. 3) is attached and the further movement of the parts drives the plunger, 51, so that its foot, 52, engages said bottle forcing it downward. The label is in contact with the rollers, 73. As the bottle moves downward the levers, 16, spread and the label engages the bottle with its pasted surface. The rollers, 73, smooth the label onto the bottle which is received by the table, 60, as it passes between said rollers, the levers, K, spreading to permit this. Simultaneously with the downward movement of the plunger to force the bottle between the rolls the carriage, H, begins to recede carried by the lever, E, and the shoes, 19, of the label carrying lever pass over the daubing roll, 80, receiving paste therefrom. As these shoes reach a point adjacent the label box the cam pin, 15, of said lever engages the rising portion, 32, of the cam-plate depressing the rear arm of the lever and elevating said shoes so that they will pass over the top of the label box. As soon as they reach the proper position, said cam pin, directed by the curved wall, 34, of the cam-plate, passes the end of the cam and is thrown by the spring, *z*, upward into engagement

with the pin, 26. The shoes, 19, are thus thrown downward into contact with the label in the box. As the drive-shaft further rotates the shaft, 35, on the arch, *t*, is rocked by its connections throwing the arm, 40, downward and simultaneously rocking the shaft, 41, and elevating the plunger. The arm, 40, drives the pin, 26, downward against the cam pin, 15, elevating the shoes, 19, to which a label adheres above the label box. The action of the crank-shaft now causes the carriage, H, to advance, the pin, 15, riding on the track, 27, in the direction of the arrow in Fig. 7, and holding the opposite arm of the lever, *x*, elevated so that the label will not touch the roll, 80, as it passes over it. When the label lever has been carried sufficiently far so that the shoes, 19, are over the rolls, 73, the cam pin, 15, drops off the end, 28, of the track, 27, permitting the spring, *z*, to throw the inner end of the label lever upward dropping said shoes into contact with said rolls as in Fig. 3. The bottle is now inserted under the plunger and between the label levers, 16, as before described. A further movement of the driving shaft forces said bottle downward by means of the plunger. The arm, 66, as the carriage begins to advance draws the table, 60, downward, said arm being actuated from the drive-shaft in manner described. This depresses the table, 60, sufficiently far to give room for the bottle to pass below the rolls without meeting too much resistance while still forming a spring cushion to receive said bottle. As soon as the label bearing shoes have been projected into the label box the foot, 111, descending engages the plunger, 109, releasing the pawl so that the spring, 104, can drive the labels upward the distance of one notch of the ratchet, 105.

It will be noted that in my device the label carrying shoes not only serve to transport the label but also apply the paste thereto. These shoes being on spring-tensioned laterally swinging arms which are shaped to admit the bottle between them, slip from the label as the bottle is forced down by the plunger against said shoes and spread the levers. This movement leaves the paste face of the label in contact with the bottle and as said bottle continues to descend the rolls, 73, engaging the dry face of the label smooth it against the bottle which is received by the spring-tensioned table at the end of the plunger stroke. The bottle is thus forced downward against the label while held by the carrier. This overcomes the objections incident to the use of many pasting or labeling machines wherein the carrier is gummed to attach the label or its equivalent to it and said label is then passed over a paste roll to apply paste to its attaching face. The carrier is then forced into contact with the article which is rigidly held and pressure applied. This process leaves the outer face of the label after it is applied, sticky with the paste received from the carrier, a decidedly objectionable feature not incident to the use of my machine, which applies the label smoothly and with just sufficient paste on its inner face to cause it to adhere to the bottle.

It will be understood that the use of this machine is not confined to labeling bottles as it is equally well adapted for labeling circular boxes, cans and other articles.

The paste tank may contain water and the shoes employed to moisten the ordinary gummed label and carry the same to the bottle.

Having thus explained my invention, what I claim is—

1. In a bottle labeling machine, a reciprocating carriage bearing a vertically swinging lever provided with laterally swinging spring-tensioned levers curved to admit the bottle between them and provided at their free ends with label carrying shoes, substantially as described.

2. In a bottle labeling machine, a reciprocating carriage bearing a vertically swinging lever; spring-tensioned laterally swinging and laterally curved levers on said first lever label-carrying shoes on the free ends of said levers and projecting horizontally in front thereof; and a paste roll disposed in position to engage said shoes at a determined point in the passage of said carriage.

3. In a bottle labeling machine, a plunger adapted to engage the bottle, in combination with two spring-tensioned laterally spreading rolls against which the bottle may be forced by said plunger; a spring-supported table disposed below said rolls for receiving the bottle, and devices for depressing said table as the plunger releases the bottle.

4. The combination with the vertically moving plunger and its actuating mechanism of the spring-tensioned spreading rolls, 73; the spring-supported table, 60, and mechanism operated by the drive mechanism of the machine for conjointly depressing said table and elevating said plunger.

5. In a bottle labeling machine, a horizontally sliding reciprocating carriage and connecting mechanism therefor in combination with a label carrying lever on said carriage; the laterally spreading rolls and devices for throwing said lever into engagement with said rolls at a determined point in the passage of said carriage.

6. In a bottle labeling machine the spring-tensioned laterally movable label smoothing rolls; the paste-roll and the label box arranged substantially as specified in combination with a reciprocating carriage and its drive mechanism; a vertically swinging lever on said carriage provided with shoes for engaging consecutively the paste roll, label and label rolls and devices for operating said lever vertically at determined points in the passage of said carriage.

7. In a bottle labeling machine, the spring tensioned table, 60, in combination with a plunger for driving the bottle into engagement with said table; mechanism for depress-

ing said table at a determined point in the stroke of said plunger, said mechanism being automatically actuated by the drive-mechanism of the machine whereby the bottle may be released.

8. The reciprocating carriage, H, and its drive mechanism in combination with the spring-pushed lever, *x*, mounted thereon; the spring-tensioned levers, 16, carried by said spring-pushed lever the forwardly projecting shoes, 19, on said levers and mechanism for actuating the spring-pushed lever at determined points in the passage of said carriage.

9. In a bottle labeling machine, the combination of the reciprocating carriage and its actuating mechanism with the vertically swinging lever, *x*, and its actuating mechanism; the spring-tensioned outwardly curved label levers, 16, provided with laterally projecting feet, 18, and the shoes 19, detachably secured to said feet.

10. In a bottle labeling machine two spring-pushed laterally separable label-carrying shoes and mechanism for consecutively engaging said shoes with a paste-roll, a label and disposing the same in the path of a plunger; a plunger for moving the article to be labeled into contact with the upper faces of said shoes to spread the same and engage the paste face of the label carried thereby with said article, substantially as described.

11. In a bottle labeling machine two spring-pushed laterally separable label-carrying shoes and mechanism for consecutively engaging said shoes with a paste-roll, a label and disposing the same in the path of a plunger; a plunger for moving the article to be labeled into contact with the upper faces of said shoes to spread the same and engage the paste face of the label carried thereby with said article; and a yielding resistance for engaging the outer face of the label on said article as it passes the shoes, substantially as described.

ANDREW SIEGEL.

Witnesses:
O. M. SHAW,
K. DURFEE.