United States Patent

[11] 3,634,610

[72] Inventor **James F. Shafer**
Dallas, Tex.

[21] Appl. No. **63,789**
[22] Filed **Aug. 14, 1970**
[45] Patented **Jan. 11, 1972**

[73] Assignee **Continental Electronics Manufacturing Co.**
Dallas, Tex.

[54] **QUADRAPOST FAIL-SAFE INSULATOR**
14 Claims, 6 Drawing Figs.

[52] **U.S. Cl.** ..... **174/184,** 174/161 R
[51] **Int. Cl.** **H01b 17/02**
[50] **Field of Search** ..... 174/43, 161 R, 181, 183, 184, 207, 208

[56] **References Cited**
FOREIGN PATENTS
1,142,959 2/1969 Great Britain 174/184

Primary Examiner—Laramie E. Askin
Attorney—Nolte and Nolte

ABSTRACT: A fail-safe insulator includes a pair of interlocked cable loops in mutually normal planes and separated by four cylindrical insulators. Each pair of insulators has a common hinge joint, and lies in the plane of a different one of the cable loops. The cable loops extend from a primary tension line, around the unhinged ends of the pair of insulators in the respective plane, and around the junction of the other pair of insulators, so that each cable loop is supported in three places as it passes through the group of four insulators.

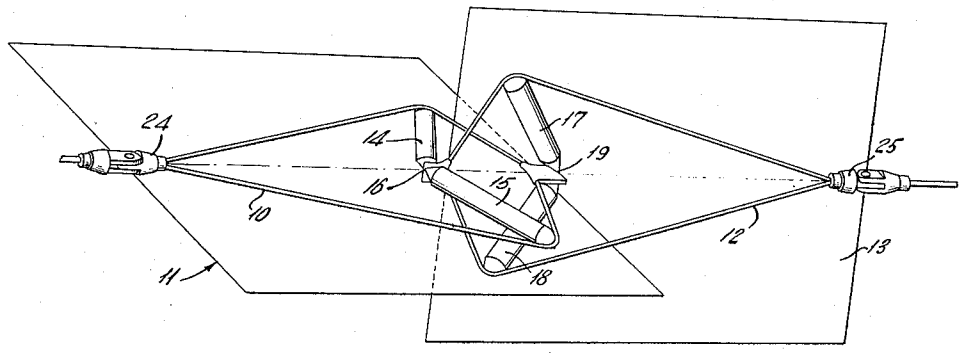

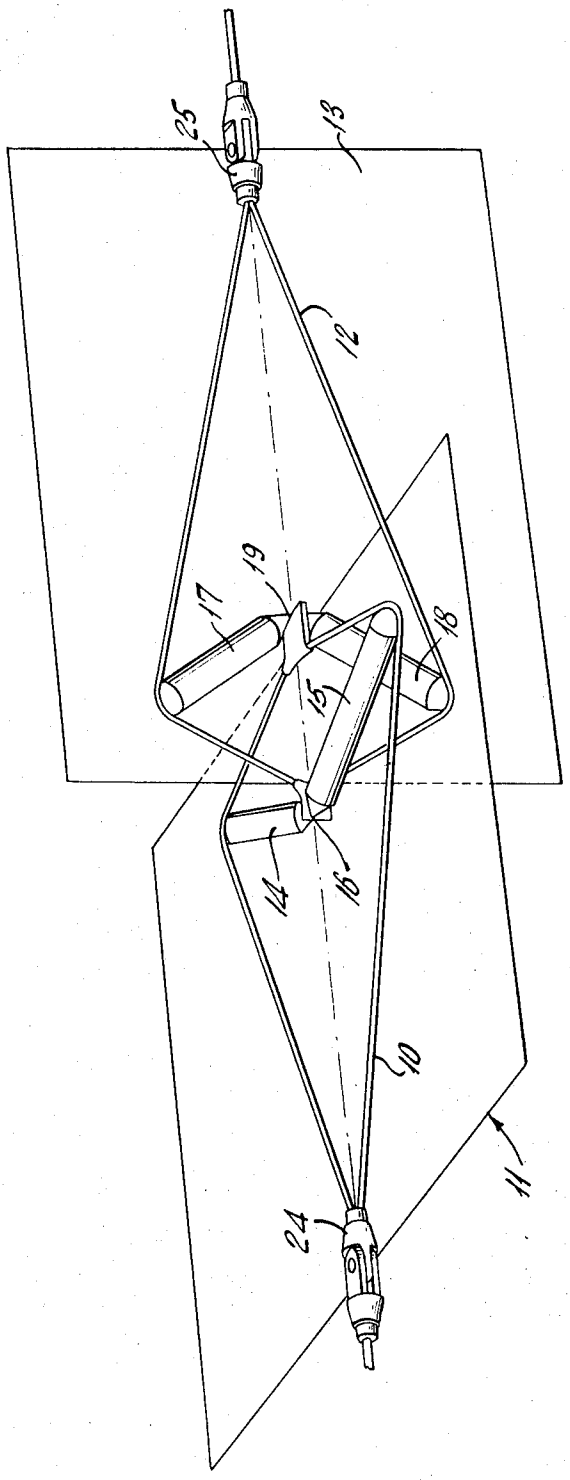

FIG. 1.

INVENTOR
JAMES F. SHAFER
BY
Nolte & Nolte
ATTORNEYS

Fig. 2.

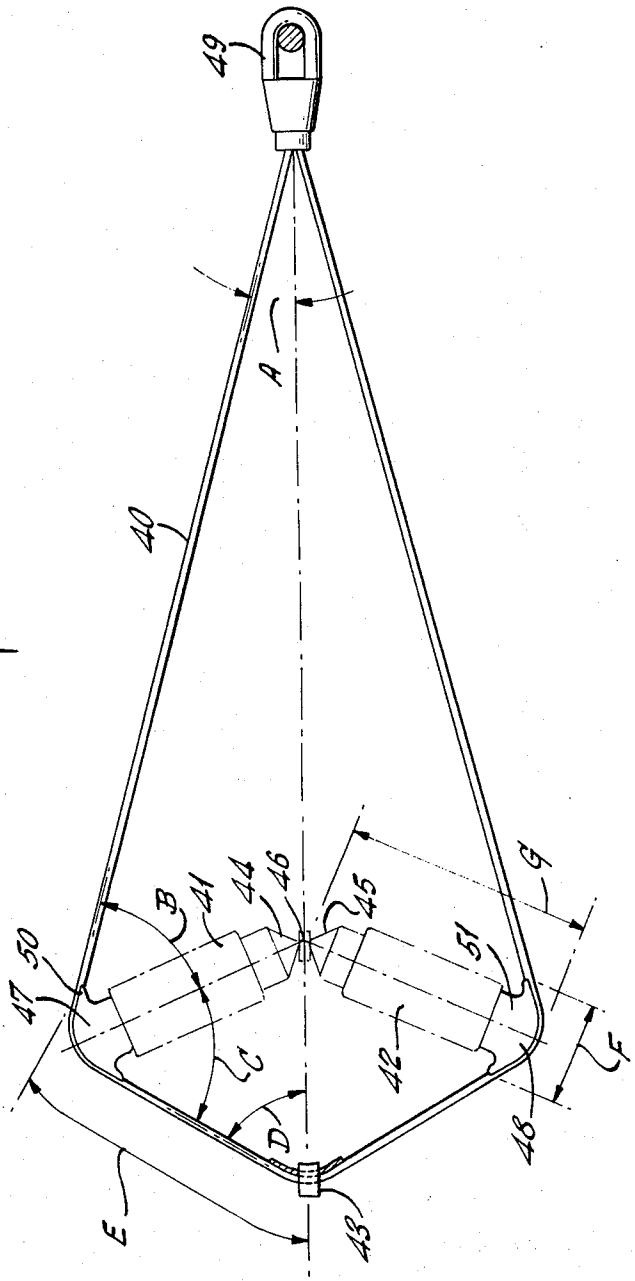

INVENTOR
JAMES F. SHAFER

BY
Nolte & Nolte
ATTORNEYS

Fig. 3.

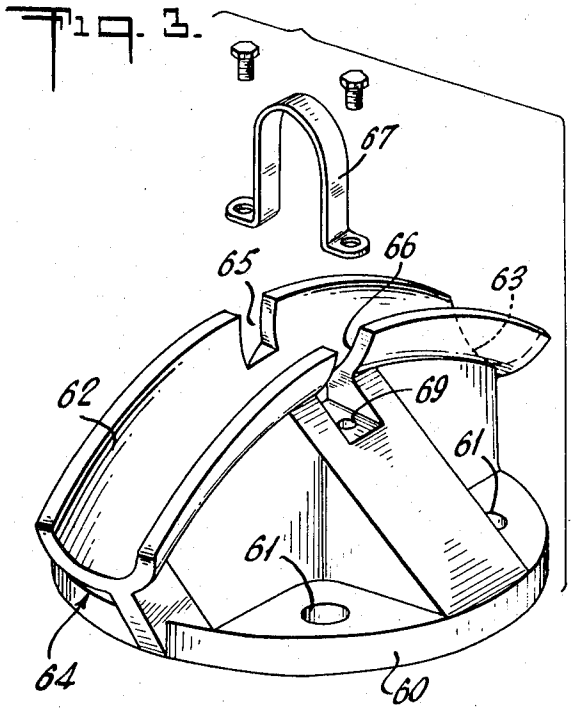

Fig. 6.

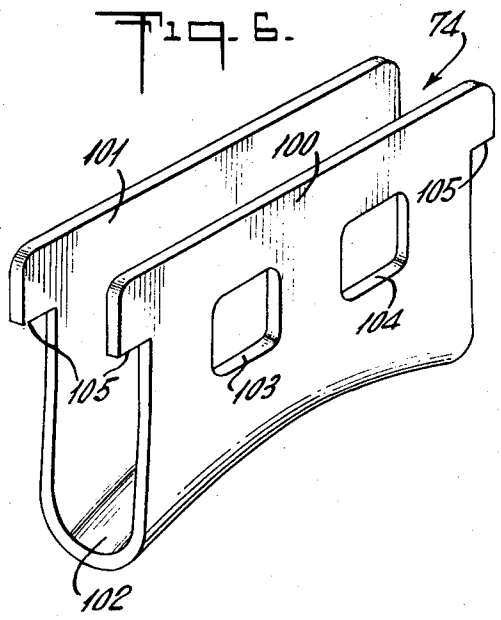

Fig. 4.

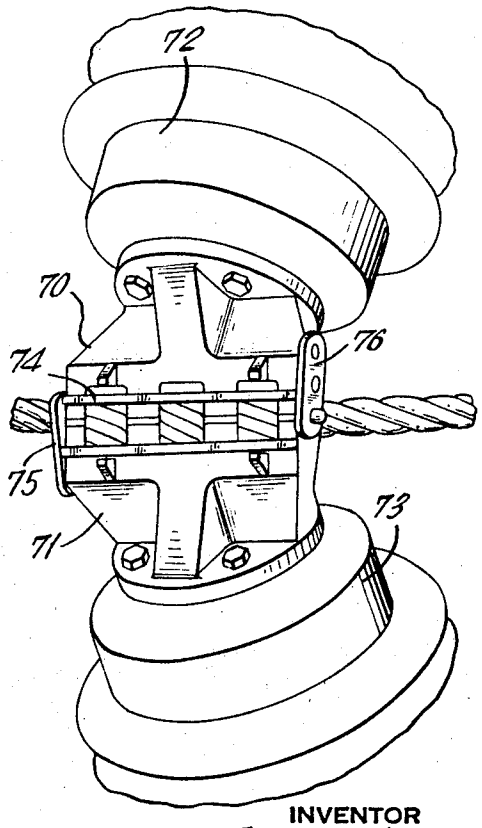

Fig. 5.

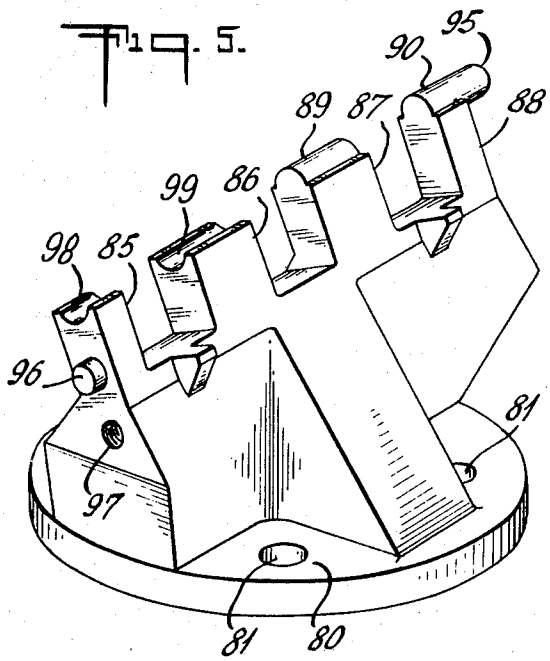

INVENTOR
JAMES F. SHAFER

BY

Nolte & Nolte
ATTORNEYS

QUADRAPOST FAIL-SAFE INSULATOR

This invention relates to electrical insulating structures, and more in particular, to a high-voltage insulating structure of the type adapted to be employed as a tension member in a high-voltage system.

In the past, ceramic materials have frequently been employed for high-voltage insulation applications, because such materials have the desirable characteristics of high mechanical strength, high electrical strength, chemical inertness, and since these materials are relatively inexpensive. Such materials do have the disadvantage, however, that they are brittle, and have low tensile strength. As a result, problems exist in the application of ceramic materials when the insulating structure is subjected to mechanical tension. While other insulating materials presently available, such as fiberglass and plastic, have good tensile properties, it has been found that such materials have tendencies to deteriorate either electrically or mechanically in high electric fields, sunlight, or in the presence of chemical contaminants. Consequently, it is still desirable to employ ceramic materials, as long as suitable structures can be provided so that they are subject only to compressional stresses.

The most common technique for arranging electrical insulation to absorb tensile stress is to surround a ceramic body with two structural members, such as steel, that have high tensile strength, in such a way that the tension members are interlocked but electrically separated by the ceramic body. Within certain limits of tensile stress, the ceramic then experiences only compressive loads, which it can easily withstand. In the event that the ceramic breaks, the interlocked tension members will continue to carry the mechanical load. This is called a "fail-safe" system.

There are many forms of such fail-safe insulators. The most common form is the small "guy" insulator, which employs a small rounded ceramic body held in compression by two pieces of interlocking wire rope. Such insulators, which have been in use for many years, are known in the trade as "johnnie balls". There is, however, a definite upper limit to the mechanical strength of johnnie balls. The largest commercially available johnnie balls have a mechanical breaking strength of about 80,000 pounds. For strength requirements greater than this, other fail-safe systems must be used. Thus, although johnnie balls are efficient and satisfactory for tensile loads under 80,000 pounds, a need exists for other fail-safe systems in which the tensile load is greater than 80,000 pounds.

The present invention is accordingly directed to the provision of a fail-safe insulator especially adaptable to withstand mechanical loads greater than can be reliably achieved with johnnie insulators.

Other insulating structures have been employed to satisfy this need, but such insulators have been subject to various disadvantages. For example, such structures have in some cases been large and heavy with the consequent problems of heavy bending moments and large wind areas. In addition, failures have resulted from material fatigue at points of high stress concentration which may result from use of the insulator in nonvertical applications, and ceramic failure has produced heavy shock loads as a consequence of the distance the components must move when the ceramic shatters. In some designs of high-voltage, high-strength insulators, the ceramic must withstand rather high secondary stresses in bending, torque and shear. Furthermore, the weight of the components necessitated by an increase in the size of the ceramic members to increase the dielectric strength of the structure increases at a very rapid rate.

It is therefore an object of this invention to provide a high-voltage high-strength insulating structure which overcomes the above disadvantages.

A further object of this invention is to provide a high-voltage fail-safe insulator adapted to withstand very high tensile stress, and characterized by a minimum of weight and having a high stability.

According to the invention, a high-voltage fail-safe insulating structure is provided comprising a pair of interlocked loops of a cable having a high tensile strength, such as loops of a steel wire cable. The solid insulating portion of the structure is comprised of four elongated insulators, which are preferably cylindrical, and of a material having a high compressive strength, such as a ceramic material. The loops are connected to opposed tension lines, and are disposed in mutually different (preferably normal) planes. Each pair of insulators is disposed within the plane of a different loop, with the insulators of each pair being joined at a central hinge joint. Each loop extends around the hinged ends of the insulators in the respective plane, and is also supported at the joint of the other pair of insulators, whereby each cable is supported at three points as it extends through the group of four ceramic cylinders.

The invention will now be described in greater detail with reference to the accompanying drawings, in which:

FIG. 1 is a simplified perspective view of one form of a high-voltage high-strength tension-insulating structure according to the invention;

FIG. 2 is a simplified sketch of a portion of the insulating structure of FIG. 1, illustrating the dimensional criteria of the structure;

FIG. 3 is a perspective partly exploded view of a saddle member that may be employed to support the cables sat one end of the insulators in the insulating structure of FIGS. 1–2;

FIG. 4 is a perspective view of a knuckle joint that may be employed between the pairs of insulators in the insulating structure of FIGS. 1–2;

FIG. 5 is a perspective view of a knuckle base member that may be employed in the knuckle joint of FIG. 4; and

FIG. 6 is a perspective view of a cable-supporting yoke that may be employed in the knuckle joint of FIG. 4.

Referring now to the drawings, and more in particular to FIG. 1, therein is illustrated a high-voltage high-tensile strength insulator assembly comprising a first cable loop **10** disposed in a first plane **11**, the cable loop **10** being interlocked with a second cable loop **12** lying in a second plane **13** normal to the plane **11**. The assembly also includes a pair of cylindrical insulators **14** and **15** extending from a common joint **16**, and lying generally in the plane **11**, and a second pair of insulators **17** and **18** extending from a common joint **19** and lying generally in the plane **13**. The cable loop **10**, which may be a high-strength steel wire rope, extends from a tension socket connector **24**, around the free ends of the insulators **14** and **15**, and is supported at the joint **19**. Similarly, the loop **12** extends from a tension socket connector **25**, around the free ends of insulators **17** and **18**, and is supported at the joint **16** between the insulators **14** and **15**. The sockets **24** and **25** may be of conventional construction, and are adapted to be connected to suitable tension members by conventional means. While the insulators **14**, **15**, **17** and **18** are illustrated in FIG. **1** as being simple cylindrical bodies, it will be understood that these members may be of conventional construction having, for example, external ridges to increase the surface paths.

As illustrated in FIG. **1**, it is apparent that each cable loop is supported in only three places as it passes through the group of four insulators. With this configuration, the insulating structure is mechanically stable by virtue of its geometry, so that one degree of freedom is permitted at the junction of each pair of commonly connected insulators, in the plane of the insulators. In other words, as will be described in more detail in the following paragraphs, the insulator joints **16** and **17** are provided with hinge structures, so that variation in the angle between the insulators in the plane is possible. THis freedom insures that no bending moments will be experienced by the insulators as the cable loops deform under loads approaching the point of failure of the total mechanism. The design thus insures that the insulators are subject substantially solely to compressional forces.

In order that the structure maintains its configuration when the mechanical loads approach zero, suitable clamps may be

provided to hold the cables securely to each point of cable support. Although the junctions of the insulators have a degree of freedom in their common plane, they are rigidly connected with respect to planes normal to the plane in which they lie. While the sockets 24 and 25 are not shown in detail in the FIG. 1, these sockets may also be comprised of a pair of hinged members of conventional construction, for example with the axes of each hinge extending normal to the plane of the respective loop.

It is apparent that the arrangement of FIG. 1 is a fail-safe insulator, since the interlocking of the cables prevents complete separation of the device in the event of failure of one or more of the insulators. It is further apparent that the arrangement of FIG. 1 provides the advantage that a minimum of weight is required to form the insulating structure, and increases in the sizes of the insulators to provide increased dielectric strength does not necessitate substantial increases in the size and weight of the other components. The structure therefore provides a minimum of resistance to wind forces.

In the arrangement of FIG. 1, it is to be noted that all four insulators are identical. It will be obvious that additional insulator groups and loops may be connected in series, to provide an insulator system having an even greater dielectric strength.

FIG. 2 illustrates the combination of one of the loops and the associated pair of ceramic insulators, of the type employed in the structure of FIG. 1, in order to facilitate explanation of the criteria involved in the design of a structure according to the invention, The elements of FIG. 2 are those components which are disposed in a single plane, and include the cable loop 40, the pair of insulators 41 and 42 and the knuckle joint 43 at the center of the other pair of insulators (not shown). FIG. 2 illustrates the joint between the insulators 41 and 42 in simplified form as a casting 44 on the end of insulator 41, and a casting 45 on the end of insulator 42. The castings 44 and 45, which may be high-strength steel castings, are connected together at a hinge joint 46. Saddles 47 and 48 are provided on the other ends of the insulators 41 and 42 respectively to which the cable 40 extends. The cable 40 thus extends from the tension socket 49, around the ends of the insulators 41 and 42 by way of the saddles 47 and 48 respectively, and through the knuckle joint 43.

In one example of an insulating structure according to the invention, the structure was designed for a 72,000 pound working load, and the overall length of the structure, as shown in FIG. 1, was 25 feet. The cables were 1 ⅛ inch diameter steel wire rope cables. Referring to FIG. 2, the angle A between the cable 40 and the centerline of the device at the sockets 49 was 15°, the angles B and C, between the cable 40 and the centerline of the insulators 41 and 42, on the sides thereof toward the socket 49 and knuckle 43 respectively, were both 51.9°. The angle D between the cable 40 and the centerline of the device at the knuckle 43 was 61.2°. The lengths of the insulators 41 and 42, exclusive of end supports, was 31 inches. The heights of the castings 44 and 45 were 3 ⅜ inches, and the heights of the saddles 47 and 48 were 3 ⅜ inches. With these dimensions, it was found that the dimension E of the cable between the center of the knuckle 43 and the centerlines of the insulators 47 and 48 was very critical from the standpoint of stability of the device, so that a tolerance of plus or minus one-sixteenth of an inch for this dimension was necessary in order to insure stability. This tolerance is of course much too close from a practical standpoint, and may even be exceeded by stretching of the cable under load. In order to overcome this problem, additional supports were provided at the ends of the saddles 47 and 48 in the form of outriggers 50 and 51, which increased the lengths over which the cable is supported on a radius at these points. By this means, the tolerance of the distance E was increased to plus or minus one-fourth of an inch, which is satisfactory from a practical standpoint. Thus, while the absolute magnitude of angles B and C is not critical, the ideal dimension E makes the angles B and C equal when the device is under maximum load. Under this condition, the bending stress in the insulator is normally zero, and the tensions are equal throughout the loop 40. Thus, even though the structure is designed to make the dimension E as precise as possible, it is desirable to increase the length of support on the cable at the insulators in order to increase the tolerance for stability. It has also been found that for a practical limit, the ratio of the length F of support of the cables at the ends of the insulators to the total length G of the insulators 41 and 42 plus their supports, should not exceed about 1:3.

The above-mentioned tolerance in the dimension E of the cable can be maintained in the actual manufacture of the insulating device by preloading a cable to be employed and accurately marking the cable at the points for the desired dimension. The load is then released, and the short sleeves are pressed on the rope at each of the marked points. In this arrangement, recesses (not shown) can be provided in the saddles 47 and 48, to receive the sleeves, and clamps hold the cable from slipping in the knuckle 43, so that it is not necessary to firmly clamp the cable in position.

Mathematical analysis, beyond the scope of the present disclosure, has shown that the dimension E is the critical factor in designing a completely stable insulator for maximum tensile strength according to the invention. If this dimension is accurate, the ceramic insulators will be in pure compression, and the cable will have equal tension throughout. If the dimension E is not exact, but the distance F is great enough that the stability tolerance is not exceeded, the insulators will subject to some bending, the angles B and C will no longer be equal, and the tension in the rope will not be equal throughout. In any stable state, however, the degree of stability is absolute, so that forcible deformation of the structure will not effect instability. In the above example, when outriggers 50 and 51 of 56 inches each were added to both sides of the cable, at the insulators 41 and 42 respectively, the device failed at 175,000 pounds, significantly above the designed failure point, and the failure was due to parting of the steel rope.

It is to be pointed out that secondary stresses may arise in the cylindrical insulators due to the weight of the insulators themselves, aside from the compressional stresses applied to the structure as a whole. These secondary stresses are very small, however, and are constant for any given attitude of the assembly.

FIG. 3 is a perspective view of one embodiment of a saddle which may be employed on the ends of the cylindrical insulators for supporting the cable. The saddle, which may be a steel casting, has a circular base 60 adapted to be bolted on the end of the insulator by means of bolt holes 61. The upper portion of the saddle is formed with a trough 62 having an arcuate cross section to receive the cable. The axis of the trough is also arcuate in order to guide the cables around the end of the insulator at the desired radius. In the above example, the saddle was designed to guide the cable through an arc having a 5 ⅝ inch radius. A recess (not shown) may be provided in the center of the trough to receive the sleeve of the cable, as above described, for maintaining the correct dimension of the structure. The ends 63 and 64 of the trough may be extended, as above described, to form outriggers for additional support for the cable. Such outriggers are of course designed according to conventional practice to provide the necessary strength in the structure. The sides of the central portion of the trough 62 may be removed, as indicated at 65 and 66, to receive a clamp 67 which is adapted to extend around the cable and be bolted to the saddle at threaded holes, such as holes 69 provided in a boss at the side of the trough. The clamp 67 serves to prevent misalignment of the cable when the mechanical load is removed from the structure.

A preferred embodiment of a knuckle joint adapted to be employed between each pair of insulators is illustrated in FIG. 4. The knuckle joint is comprised of a pair of identical knuckle base members 70 and 71 adapted to be bolted to the ends of the insulators 72 and 73, (of which only a portion is shown in FIG. 4). The knuckle joint also includes a yoke member 74, and a pair of connection plates 75 and 76. A preferred form of a knuckle base member (70 and 71) is illustrated in FIG. 5.

This member, which is preferably a steel casting, has a circular base 80 adapted to be bolted to the end of the respective insulator by means of holes 81. The upper portion of the knuckle base is comprised of a plurality of projections 85, 86, 87 and 88 extending upwardly from the base 80 generally in line in a common plane. Two adjacent projections 85 and 86 at one side of the knuckle base terminate in concave end surfaces 98 and 99 respectively, and the other two projections 87 and 88 at the other side of the knuckle base terminate in rounded ends 89 and 90 respectively. The heights of the projections 85, 86, 87 and 88 and the radii of the end surfaces 98, 99, 89 and 90 are proportioned to form a pivoting joint with an identical member in opposed relationship, as illustrated in FIG. 4. In other words, the rounded ends of projections 87 and 88 of one knuckle base member engage the concave ends of the projections 85 and 86 of the other knuckle base member at the joint, so that a pivotal connection is provided between the two knuckle bases permitting the angle between the cylindrical insulators to vary in the plane of the corresponding cable loop.

The end of the projection 88 is provided with an outwardly extending cylindrical projection 95 substantially in line with the pivotal axis of the hinging action of the knuckle base. On the other side of the knuckle base, a cylindrical projection 96, displaced from the pivotal axis of the knuckle base assembly, is provided extending outwardly from the projection 85, extending radially outwardly with respect to the axis of the knuckle base. In addition, a threaded aperture 97 is also provided in the side of the knuckle base adjacent the projection 85, having an axis parallel to the pivotal axis of the knuckle base. As illustrated in FIG. 4, a connection plate 75, 76, is provided at each end of the knuckle joint. The connection plates 75 and 76 are provided with three holes, the central hole of each connection plate is adapted to engage the projection 96 of one of the knuckle base members, with one end hole in the connection plate being bolted to the third aperture 97 in the same knuckle base. The other end hole of each connection plate engages the projection 95 on the other knuckle base member, so that the connection plates hold the knuckle bases together. The fit of the connection plate to the knuckle bases is not sufficiently close to prevent slight pivotal movement of the knuckle bases.

The yoke member 74, which is illustrated in more detail in FIG. 6, also is preferably a steel casting. The yoke member 74 has a pair of parallel side plates 100 and 101 joined at one side to form a trough 102 adapted to receive the cable. The bottom of the trough 102 is arcuate to guide the cable around the desired radius. In the above example, the bottom of the trough had a radius of 5 ⅝ inches. Each side of the yoke 74 is also provided with a pair of rectangular apertures 103 and 104 respectively. As illustrated in FIG. 4, the central projections 86 and 87 of the knuckle base members extend through the apertures 103 and 104 of each side of the yoke, so that tensile stresses on the cable are transferred from the trough 102 of the yoke to the projections 86 and 87 of the knuckle bases. The sides of the yoke 74 may also be extended, in line with the apertures 103 and 104, to provide end projections 105 which engage the sides of projections 85 and 88 of the knuckle bases to provide additional support.

While the invention has been disclosed with respect to a few preferred embodiments, it will be apparent that many changes and modifications may be made therein without departing from the spirit and scope of the invention. For example, the design of the saddle members and insulator joints may obviously assume many forms without departing from the concept of the invention.

What I claim is:

1. An electrical insulator of the type adapted to extend between a pair of supports to which tensile forces are applied, said insulator comprising a pair of supports, a pair of interlocked loops of tensilely strong material, with each said loop being connected to a separate support, first and second pairs of cylindrical insulating members, said pairs of insulators being disposed in different planes, a separate hinge joint interconnecting first ends of the insulators of each pair of insulators, each said loop extending from its respective support around the other ends of each of the insulators of one pair of insulators, and being supported at a point between said other ends of said one pair of insulators by the hinge joint interconnecting the other pair of insulators.

2. The electrical insulator of claim 1 wherein the planes in which said pairs of insulators are disposed are mutually normal.

3. The electrical insulator of claim 1, wherein each said loop extends from said other ends of the respective pair of insulators at the same angle in both directions with respect to the axis of the insulators.

4. The electrical insulator of claim 1 wherein each said loop extends symmetrically with respect to an axis between its respective support and the hinged joint interconnecting the other pair of insulators.

5. A high-voltage fail-safe insulator assembly of the type adapted to extend between first and second spaced-apart supports and to withstand mechanical tensile loads applied to said supports, said assembly comprising said first and second spaced-apart supports, a first pair of elongated insulating members extending in a firs plane from a first common joint, a second pair of elongated insulating members extending in a second plane from a second common joint, first and second interlocked loops of tensilely strong material extending in said first and second planes respectively from said first and second supports respectively to said second and first joints respectively, said first and second pairs of insulators being positioned to symmetrically spread said first and second loops respectively, whereby said insulating members are subjected substantially solely to compressional forces.

6. The high-voltage insulator assembly of claim 5 wherein said first and second planes are mutually normal, and the angles formed between each said insulating member and the loop extending therearound are substantially equal on each side of the respective insulator member.

7. The high-voltage insulator assembly of claim 6 wherein the ends of said insulating member around which said loops extend are provided with arcuate support members for holding said loops.

8. The high-voltage insulator assembly of claim 7 wherein said support members support the respective loop over a length about one-third of the length of said insulating member.

9. The high-voltage insulator assembly of claim 7 wherein said support members support the respective loops over a length sufficient to provide mechanical stability to said insulator assembly throughout a load range from zero to the ultimate tensile strength of said loop.

10. The high-voltage insulator assembly of claim 5 wherein said first and second common joints are hinge joints.

11. The high-voltage insulator assembly of claim 10 wherein said hinge joints each comprise first and second substantially identical hinge members, with one said hinge members being affixed to the end of each insulating member at the respective joint, said hinge members having generally axially extending projections, with half of said projections having concave ends and the other half of said projections having convex ends, whereby the convex ends of each hinge member mate with the concave ends of the other hinge member at the respective joint to form said hinge.

12. The high-voltage insulator assembly of claim 11 comprising an arcuate support member for supporting said loops at said common joints, said arcuate support members having apertures through which said projections extend to support said support member.

13. The high-voltage insulator assembly of claim 11 comprising plate means affixed between the outermost projections of said hinge members at each said hinge joint.

14. In a high-voltage fail-safe insulating assembly of the type having first and second interlocked loops of a material having high tensile strength for connection to separate tension lines, and wherein said interlocked loops are separated by an insu-

lating structure; the improvement wherein said insulating structure comprises a first pair of elongated insulating members extending from spaced-apart first support points on said first loop in the plane of said first loop to a first junction, a second pair of elongated insulating members extending from spaced-apart second support points on said second loop in the plane of said second loop to a second junction, means supporting a point on said first loop intermediate said first support points from said second junction, and means supporting a point on said second loop intermediate said second points from said first junction, whereby said insulating members are subjected substantially only to compressional forces.

* * * * *