G. W. LEWIS.

WASHING MACHINE.

APPLICATION FILED JULY 17, 1916.

1,262,962. Patented Apr. 16, 1918.

2 SHEETS—SHEET 1.

Fig. 2.

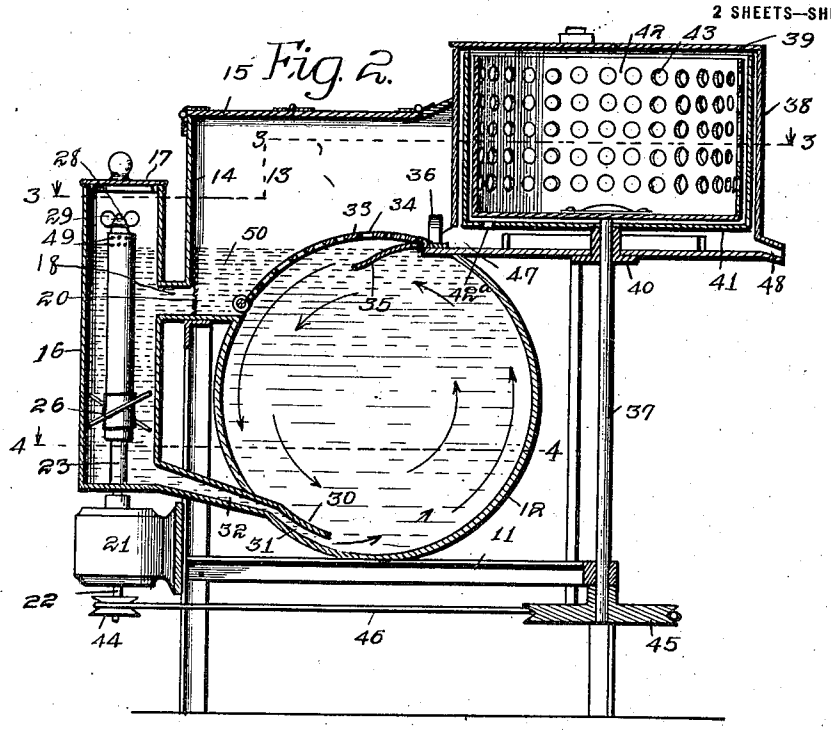

Fig. 1.

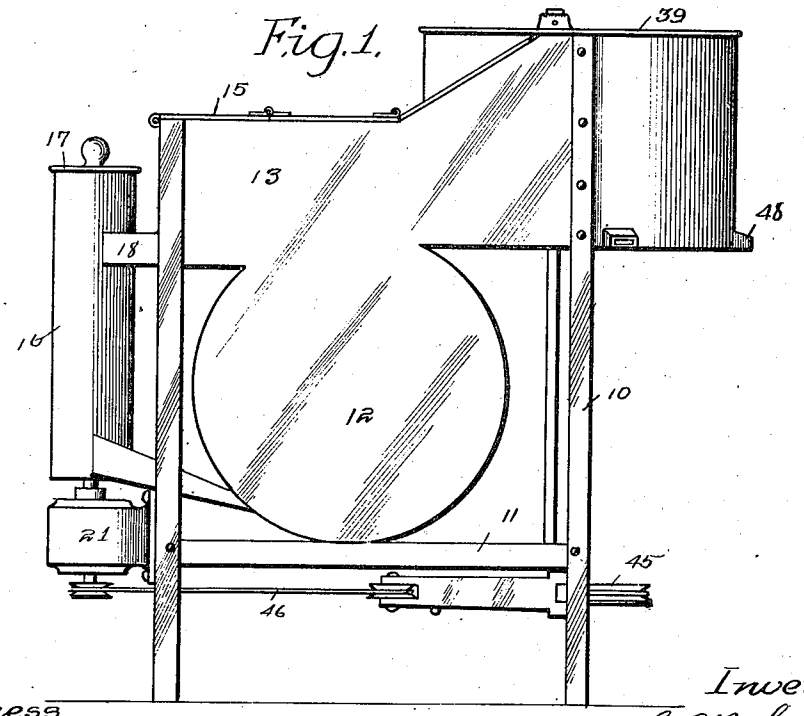

Witness
A. G. Hagner

Inventor
G. W. Lewis
by Orwig & Bair attys

G. W. LEWIS.

WASHING MACHINE.

APPLICATION FILED JULY 17, 1916.

1,262,962.

Patented Apr. 16, 1918.

2 SHEETS—SHEET 2.

Fig. 6.

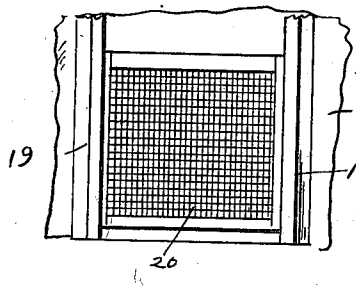

Fig. 5.

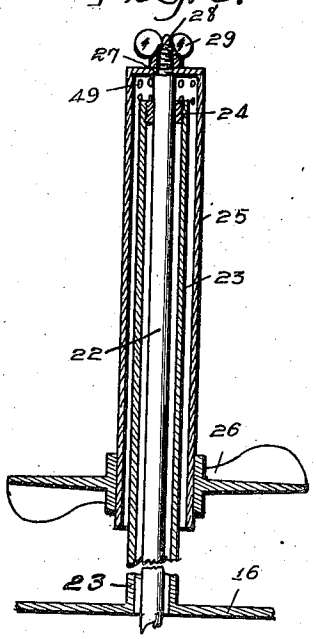

Fig. 4.

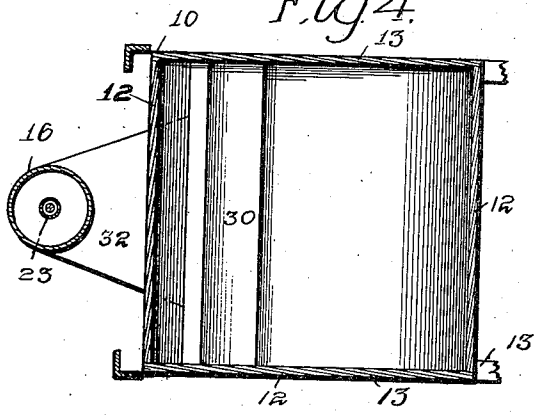

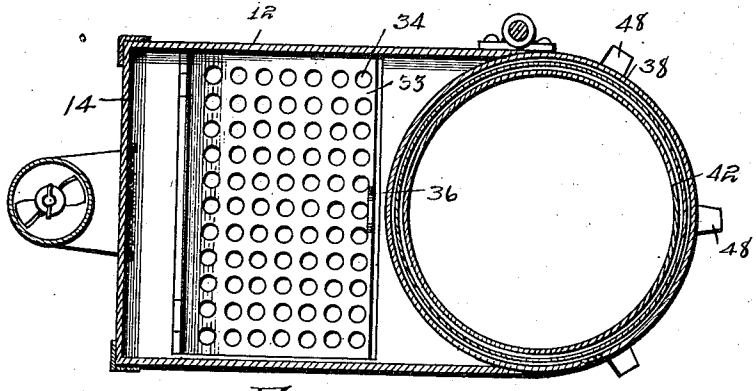

Fig. 3.

Witness
A. G. Hague.

Inventor.
G. W. Lewis
by Orwig & Bair Attys

UNITED STATES PATENT OFFICE.

GEORGE W. LEWIS, OF GRINNELL, IOWA, ASSIGNOR TO GRINNELL WASHING MACHINE COMPANY, OF GRINNELL, IOWA.

WASHING-MACHINE.

1,262,962. Specification of Letters Patent. **Patented Apr. 16, 1918.**

Application filed July 17, 1916. Serial No. 109,673.

To all whom it may concern:

Be it known that I, GEORGE W. LEWIS, a citizen of the United States, and resident of Grinnell, in the county of Poweshiek and State of Iowa, have invented a certain new and useful Washing-Machine, of which the following is a specification.

The object of my invention is to provide a washing machine of simple, durable and inexpensive construction, of the kind designed to be operated by power derived from a small electric motor, internal combustion engine or the like, and especially adapted for domestic laundry purposes.

A further object is to provide a washing machine of this kind in which the clothes during the washing process will be maintained in a loose condition not matted or massed together, so that the soapy water may be forced through every particle of the clothes to loosen the dirt and remove it from the clothes.

A further object is to provide a washing machine of this character in which delicate garments will not be injured by being rubbed upon roughened or corrugated surfaces, or torn by the action of mechanical agitators, and at the same time to provide means whereby rapidly moving currents of soapy water will be forced through every particle of the fabric and all parts of the fabric will be successively presented to this action of the forced currents of soapy water.

A further object is to provide a washing machine of this class in which the clothes being washed cannot become lodged in any part of the clothes container, and particularly cannot become lodged or held at the water outlet openings of the clothes container.

A further object is to provide a washing machine having its body so shaped and arranged as to provide also a container for an inclosed centrifugal extractor or wringer.

A further object is to provide improved means for forcing currents of water through the clothes container by means of a small electric motor connected direct to a water propeller without any gears or working parts likely to get out of order or to be noisy, and also to provide a water propelling means so arranged that it may be operated without packing joints which might leak or require readjustment or repacking, which would cause unnecessary friction.

My invention consists in the construction, arrangement and combination of the various parts of the device whereby the objects contemplated are attained, as hereinafter more fully set forth, pointed out in my claims, and illustrated in the accompanying drawings in which:

Figure 1 shows a side elevation of a washing machine embodying my invention.

Fig. 2 shows a central, longitudinal, vertical sectional view of the same.

Fig. 3 shows a horizontal sectional view on the line 3—3 of Fig. 2.

Fig. 4 shows a horizontal, sectional view on the line 4—4 of Fig. 2.

Fig. 5 shows a detail, vertical, sectional view illustrating the motor shaft and the means for connecting it to the propeller without gears or packing devices, and

Fig. 6 shows a detail view illustrating the screen between the overflow compartment and the water propeller compartment.

Referring to the accompanying drawings, I have used the reference numeral 10 to indicate the upright frame members of the machine and 11 the horizontal frame members. Mounted in the central portion of the frame is a clothes containing cylinder 12, arranged horizontally and preferably made of sheet metal closed at both ends and open at its top. The ends of the cylinder 12 are extended upwardly and form the sides 13 of the overflow compartment. This overflow compartment extends a considerable distance above the top of the cylinder 12 and one end thereof is closed by the wall 14 and the other end by the extractor compartment hereinafter described.

Hinged to the wall 14 is a sectional cover plate 15, the parts of which are hinged to each other, as shown in Fig. 2, which cover may be raised to provide access to the overflow compartment 13.

At one end of the washing machine body is an upright cylindrical propeller containing chamber 16, having a detachable top 17 and also having a communicating tube 18 connecting it with the overflow chamber at a point below the top of the clothes containing chamber 12. Arranged in this communicating tube 18 is a screen 20, slidably mounted in guides 19 arranged on the end wall 14, so that the screen may be raised and lowered to cover or uncover the communicating tube 18.

Mounted on the machine frame directly beneath the propeller containing chamber 16 is a small electric motor 21, having a shaft 22. This shaft 22 extends upwardly to a point near the top of the chamber 16 and has mounted on its upper end a tube 25 of considerably larger diameter than the shaft, and spaced apart from the shaft. The upper end of this tube is fixed to the shaft 22 by means of the winged nut 29 mounted on the screw-threaded upper end 28 of the shaft 22 to hold the top of the tube 25 firmly against the shoulder 27 of the shaft 22.

On the lower end of the tube 25 is a water propeller 26, of ordinary construction.

The bottom of the cylindrical chamber 16 is formed with an opening through which the shaft 22 extends, and a tube 23 surrounds the shaft but is spaced apart from it and is connected to the bottom member of the chamber 16. This tube 23 extends upwardly inside of the tube 25 and is provided at its upper end with a bearing 24 for the upper end of the shaft 22. The upper end of the tube 25 is perforated to permit the escape of water that backs up through the tube 25 and around the tube 23 on account of the pressure from the propeller 26, otherwise the water would fill the space between the bearing 24 and the tube 25 and run down between the bearing and shaft into the motor.

By this arrangement it is obvious that the tube 23 performs the double function of providing a bearing for the upper end of the shaft 22 and at the same time it prevents the water in the chamber 16 from leaking out through the opening in the chamber 16 and through which the shaft 22 is projected.

At the bottom of the propeller chamber 16 there is a passageway 32 leading from the chamber 16 to the interior of the clothes container. This passageway is tapered, as indicated in Figs. 2 and 4, and is widest at its discharge end on the interior of the clothes container, there being in the clothes container at such discharge end a narrow slot 31 extending the full width of the clothes container and covered by a deflector 30, which prevents clothes from entering the slot and which also gives a proper direction to the current of water that is forced into the clothes container.

At the top of the clothes container is a hinged cover 33 provided with perforations 34 and with a resilient deflector plate 35. This deflector plate is connected to the free edge of the cover and is inclined downwardly and in a direction toward the water propeller, as clearly shown in Fig. 2. A handle 36 is provided on the upper part of the free edge of the hinged cover.

At the end of the frame opposite from the propeller is the wringer which comprises an upright shaft 37 having fixed to its upper end a clothes containing cylinder 42 provided with perforations 43. This shaft 37 extends through a bearing 40 and has at its lower end a pulley 45 connected by a belt 46 with a pulley 44 on the lower end of the motor shaft 22.

The cylindrical clothes container 42 is open at its top and is contained within a water distributing cylinder 41. This water distributing cylinder is open at its top and has a single opening 42ª in its bottom. It is rotatably mounted with relation to the clothes container 42, so that it may be turned to any desired position. This cylinder 41 is also contained within a stationary cylindrical chamber 38 having an adjustable top 39 and a series of discharge spouts 48 leading to points away from the clothes container, and a discharge spout 47 leading to the clothes container. The clothes to be dried are placed in the receptacle 42, and as this receptacle is rotated the water is thrown from them by centrifugal action into the cylinder 41. The water in this cylinder then runs through the opening 42 into one or the other of the discharge spouts 47 and 48, depending upon the position in which the cylinder 41 has been placed, so that if desired the water from the clothes may be returned to the washing machine clothes container or may be discharged into the other tubs or receptacles.

In practical operation I first preferably fill the container with soapy water to a point approximately level with the top of the clothes container, so that some water will be in the overflow receptacle at the point marked 50 in Fig. 2. Then the clothes to be cleaned are placed within the clothes receptacle and the motor 21 is started. This causes the propeller 26 to be rapidly rotated and a current of water is forced downwardly through the passageway 32 and is guided by the deflector plate 30 in a circular direction around the interior of the clothes container. The water and clothes are then continuously carried around in the soapy water, and when the clothes strike the deflector plate 35 at the top of the clothes container they will be deflected downwardly and inwardly toward the center of the clothes container. This accomplishes several desirable results. First, the water is being rapidly forced out through the openings 34 in the top 33, and this deflector 35 prevents the clothes from being held against the inside of the cover by these currents of water; and second, the deflector 35 engages the clothes and slightly retards the parts thereof which are thus engaged, permitting the parts that are not in contact with the deflector to move ahead faster than the parts that are in contact, thus causing the clothes to be turned over and to be given a somewhat independent rotary motion of their own within the container, with the effect that each time that the clothes go

around inside of the container, a complete circle, some parts of the clothes or of the outer layer of clothes, will be engaged by this deflector plate and retarded and turned over, whereby new surfaces or new clothes are exposed for the action of the current of soapy water. The water that passes out through the cover 33 flows through the passageway 18 back into the propeller container. This independent rotary motion of the clothes is further obtained by the use of the yielding deflector plate. As the clothes circle around the clothes container, they strike the deflector plate and stop. They are then held until sufficient clothes have been accumulated so that the increased water pressure against the consequent area of clothes will press up the deflector plate and allow the clothes to pass around and downwardly. Experience shows that the yielding deflector plate accomplishes this result much better than a stationary one.

I have found that in practice the action of the propeller on the soapy water creates a very large amount of suds with a comparatively small amount of soap, and that in doing an ordinary washing with my improved machine very satisfactory results can be obtained by the use of about half the amount of soap that is required in washing machines that depend for their action on rubbing processes.

Another advantage gained by my improved washing device is that the clothes are cleaned very quickly and thoroughly, probably due to the facts that the clothes never become massed or pilled compactly in any part of the tub, and various layers of the clothes stand spread apart from each other as they travel around within the tub and new surfaces are constantly being presented to the action of the water currents.

The specific gravity of ordinary garments is somewhat greater than that of the water, and hence they tend to sink to the bottom of the tub. However, by means of my improvement it does not matter whether the clothes are of greater or less specific gravity than the water, because they are constantly being forced up and down within the tub from the bottom to the top of the container.

One of the advantages of my invention is that a comparatively small clothes container may be used to hold a comparatively large amount of clothes, because there is nothing within the container to occupy space, such for instance, as the agitators or rubbing devices, ordinarily employed in washing machines and contained within the tub. In my improvement the entire space within the clothes container is occupied by the clothes and soapy water.

There is a material advantage in my improved construction in having both the clothes container and the overflow chamber. The overflow chamber is important because it provides a space for the suds that are being made in such large quantities when clothes are being washed, and prevents this suds from overflowing, and at the same time this overflow chamber provides means whereby the clothes container may be filled to a point approximately near its top, but it does not matter particularly whether it is filled slightly above or slightly below the top of the clothes container. Hence without the overflow chamber it would be difficult to get just exactly the right amount of water in the clothes container.

Another advantage of my invention is that by providing the three essential parts, to wit the clothes container, the overflow chamber and the extractor containing chamber, all mounted on the same frame and communicating with each other, these parts are all intimately associated and connected with each other and make for convenience and economy.

I have in a separate application set forth more particularly the structural details of the extractor mechanism and have not claimed the extractor specifically in this application, but it is shown herein and described solely for the purpose of showing its arrangement and combination with the overflow chamber and the clothes container.

I claim as my invention:

1. In a washing machine, the combination of a substantially cylindrical clothes container, having its axis arranged horizontally, there being perforations in the top of said clothes container, a water conducting means communicating with said perforations and also communicating with the interior of the clothes container near the bottom thereof, and means in said water communicating chamber for forcing a current of water downwardly through it.

2. In a washing machine, the combination of a substantially cylindrical clothes container, having its axis arranged horizontally, there being perforations in the top of said clothes container, extending to a point below the top of the interior of the container, a water conducting means communicating with said perforations and also communicating with the interior of the clothes container near the bottom thereof, means in said water communicating chamber for forcing a current of water downwardly through it, and a yielding deflector adjacent to said perforations.

3. A washing machine comprising a substantially cylindrical clothes container with its axis arranged horizontally, the top of said container being open, a hinged perforated cover for the top, the perforations therein extending to a point below the interior of the top so that water moving through the container in a circular direction

around a horizontally arranged axis will pass out of the container through said perforations, a deflector connected with the hinged cover adjacent to the perforations, an upright chamber at the side of the clothes container, communicating at its upper portion with said perforations, and also communicating at its lower portion with the interior of the clothes container, and means in said upright chamber for forcing a current of water downwardly through it.

4. A washing machine comprising a substantially cylindrical clothes container with its axis arranged horizontally, the top of said container being open, a hinged perforated cover for the top, the perforations therein extending to a point below the interior of the top so that water moving through the container in a circular direction around a horizontally arranged axis will pass out of the container through said perforations, a deflector connected with the hinged cover adjacent to the perforations, an upright chamber at the side of the clothes container, communicating at its upper portion with said perforations, and also communicating at its lower portion wth the interior of the clothes container, means in said upright member for forcing a current of water downwardly through it, means for connecting the upright chamber with the clothes container, comprising a narrow slotted discharge opening of a length substantially that of the length of the clothes container, and a deflector adjacent to said slot within the clothes container to deflect the water in a circular direction around the interior of the clothes container.

5. In a washing machine, the combination of a clothes containing chamber, an upright tube adjacent to the clothes containing chamber and communicating with it at both ends, an upright shaft extended through said tube, a small tube surrounding the shaft and forming a water-tight joint with the bottom of the said upright tube, a bearing at its upper end for the shaft, a hollow shaft fixed to the upper end of the said shaft and extended downwardly over the tube surrounding the shaft to a point near the bottom of the upright tube, and a propeller on the lower end of said hollow shaft, for the purposes stated.

Des Moines, Iowa, June 5, 1916.

GEORGE W. LEWIS.