June 11, 1946. J. W. GEE 2,402,112

COMBINED STORM AND SCREEN WINDOW INSTALLATION

Filed June 5, 1945 2 Sheets-Sheet 1

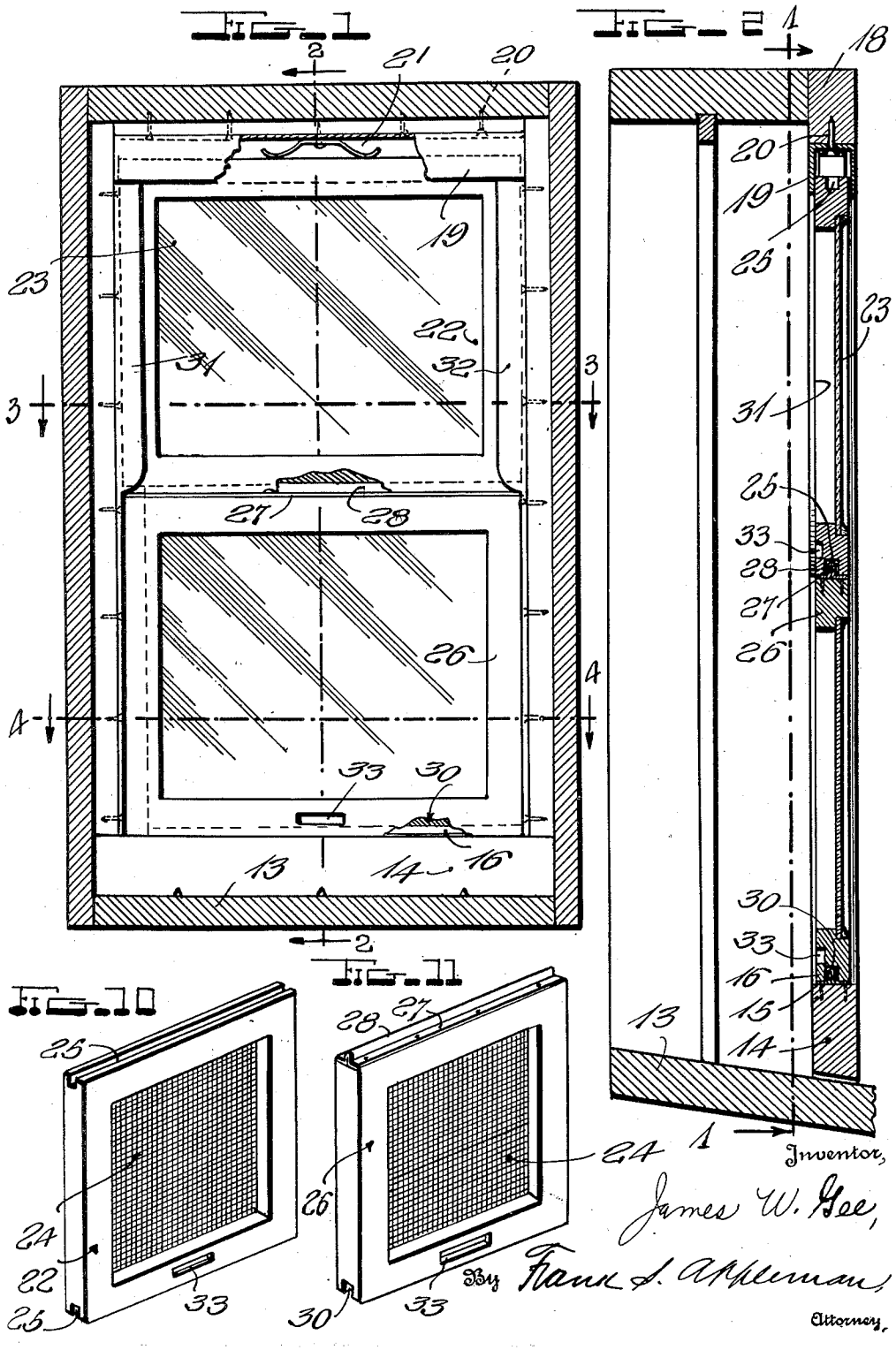

June 11, 1946. J. W. GEE 2,402,112

COMBINED STORM AND SCREEN WINDOW INSTALLATION

Filed June 5, 1945 2 Sheets-Sheet 2

FIG. 3

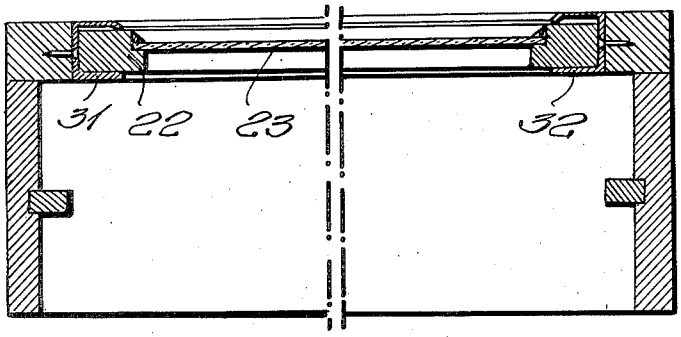

FIG. 4

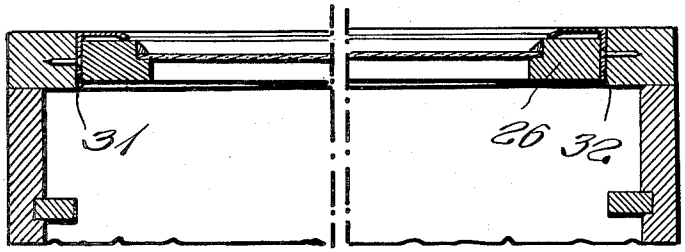

FIG. 6

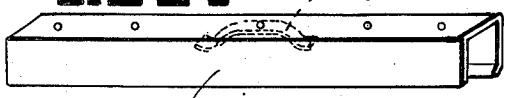

FIG. 12

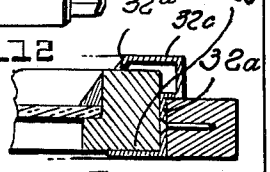

FIG. 13

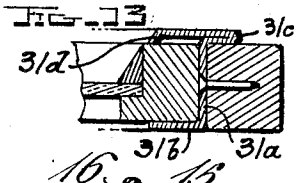

FIG. 7

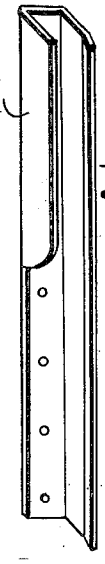

FIG. 8

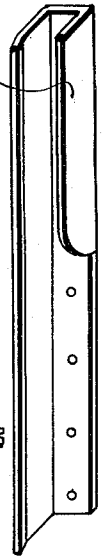

FIG. 9

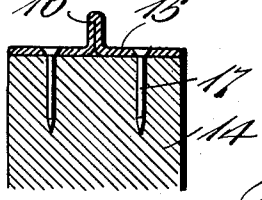

FIG. 5

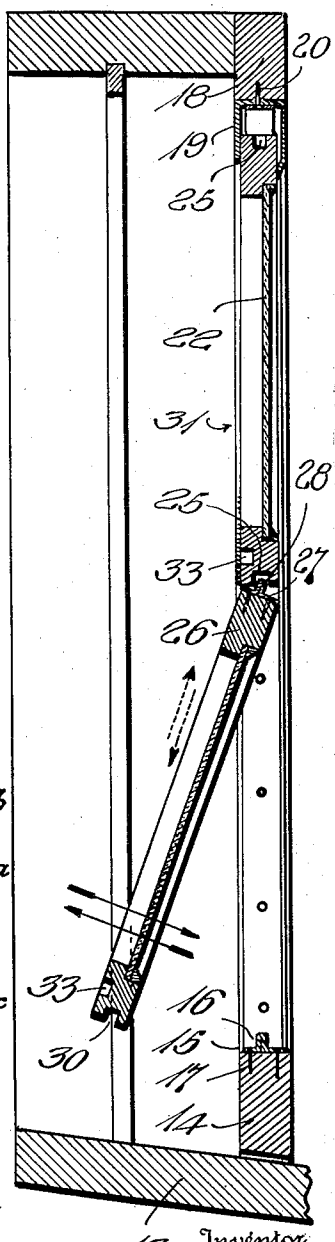

Inventor,
James W. Gee,
By Frank L. Ackerman,
Attorney.

Patented June 11, 1946 2,402,112

UNITED STATES PATENT OFFICE

2,402,112

COMBINED STORM AND SCREEN WINDOW INSTALLATION

James W. Gee, Chicago, Ill.

Application June 5, 1945, Serial No. 597,625

4 Claims. (Cl. 160—90)

1

This invention relates to windows, particularly for household purposes, or for any type of building, and an object is to provide interchangeable sash which can be installed or removed from a position within the house or guarded structure, and it is the purpose of the inventor to have what are usually referred to as storm sash or ventilating screens interchangeable, as stated, and provided with means for effecting and maintaining close joints between the parts when assembled.

It is an object of the invention to provide channel irons, a portion of the flange on one side of each being omitted to permit the installation of the sash, one above the other, the said sash having interengaging means at their contiguous edges which serve to retain the sash in place after installation, due to the interlocking engagement of the parts of the sash and pressure exerted on the upper sash, as will presently appear.

It is a further object of the invention to provide an installation embodying a storm window and screen comprising parts which are simple in construction and comparatively inexpensive to produce and maintain.

With the foregoing and other objects in view, the invention consists in the details of construction, and in the arrangement and combination of parts to be hereinafter more fully set forth and claimed.

In describing the invention in detail, reference will be had to the accompanying drawings forming part of this application, wherein like characters denote corresponding parts in the several views, and in which:

Figure 1 illustrates a view in elevation of an installation, showing a storm window, the window frame in which it is installed being in section, taken on the line 1—1 of Fig. 2;

Figure 2 illustrates a sectional view of the installation on the line 2—2 of Fig. 1;

Figure 3 illustrates a sectional view of the installation on the line 3—3 of Fig. 1;

Figure 4 illustrates a sectional view on the line 4—4 of Fig. 1;

Figure 5 illustrates a sectional view similar to Fig. 2, showing the manner of installing the storm sash;

Figure 6 illustrates a perspective view of a channel iron for holding the upper sash;

Figure 7 illustrates a perspective view of one of the channel irons, reduced as to length;

Figure 8 illustrates a perspective view of the opposite coacting channel iron, reduced as to length;

2

Figure 9 illustrates a sectional view of the support for the bottom sash;

Figures 10 and 11 illustrate perspective views of the screen sash;

Figure 12 illustrates a sectional view showing a modified metal strip for larger storm sash; and

Figure 13 illustrates a sectional view showing a modified metal strip for a smaller storm sash.

In these drawings, a window frame of conventional construction may be employed and, in this embodiment of the invention, the window sill 13 is provided with a rail 14, on which the lower sash is supported, and it is provided with a plate 15 on its top surface, the said plate having a tongue 16 formed by crimping the plate, and the said plate is secured in place on the rail by anchoring means 17, such as nails or the like. The upper member 18 of the frame has a channel iron 19 secured to its under surface by fastenings 20, such as nails or the like, and a bow spring 21 is secured to the web of the channel iron and its ends depend into the path of travel of a sash 22 which may have glass panes 23 when used as a storm window, or may have screening 24 when used as a ventilator.

The upper and lower rails of one sash are provided with grooves, such as 25, so that they can be used in coactive relation with the lower sash in inverted positions for, as is seen, the lower sash 26 is provided with a tongue plate 27, the tongue 28 of which enters a groove 25 of the upper sash to effect a windproof joint. The member 29 of the lower sash has a groove 30 in which the tongue 16 of the plate 15 is seated to effect a windproof joint.

The sash are held in place by side channel irons 31 and 32, each of which has a flange cut away or omitted at the lower end on the inside edge of the channel iron, the omitted part of the flange permitting a clearance for the introduction of the upper sash of the assembly, and the lower sash is prevented from being displaced through the interlocking connections between the respective tongues and grooves.

The inner surfaces of the frame members may be grooved, as shown at 33, to furnish seats for the insertion of the fingers of an operator in manipulating the sash, and the manner in which the sashes are installed can be visualized from an inspection of Figure 5 wherein the upper sash is shown as being located in that portion of the channel irons 31 and 32 in which the flanges are undisturbed, and hence lateral movement of the

sash will be prevented by the engagement of the sash with said flanges. The lower sash is shown as about to be installed with the tongue on the upper portion of the sash entering the groove in the lower portion of the upper sash. The upper sash may be moved upwardly against the action of the spring 21 to an extent that the lower edge of the lower sash member will pass the tongue 16 of the plate 15 and when released the spring will force the lower sash downwardly so that the tongue is seated in the groove 30 of the lower sash, and by reason of the interlocking connections of the tongues and grooves of the lower sash, lateral movement of the lower sash is prevented and a comparatively rigid joint is formed between the assembly.

It is obvious also that by reversing the operation, the lower sash may be moved upwardly so that it clears the tongue 16 and its removal laterally of the channel irons may be effected, and the upper sash may likewise be removed by lowering it to clear the flanges of the channel irons.

Under certain installations, the channel iron shown in Figure 12 which is a modification of the channel iron 32 shown in Figure 8, may be provided with a web 32*a* having a flange 32*b* flat against the side of the sash, whereas the other flange 32*c* has an angular lip 32*d*, the edge of which bears against the sash. This relation of parts permits the introduction of the sash, and the lip bears against the sash with a yielding action, insuring pressure thereon which will cause the two sash-engaging flanges to effect a weather-tight joint between them.

In the modification shown in Fig. 13, the web 31*a* has a flange 31*b* pressing against the side of the sash, whereas the other flange is doubled on itself at 31*c* and extends across the sash in spaced relation thereto and it has a lip 31*d* whose edge bears against the sash.

In each of the modifications there is a resilient action of the outer flange which causes the lip of the flange to press tightly against the outer surface of the sash to produce a wind and weatherproof joint between these members.

I claim:

1. In a combined storm and screen window installation insertable from the inside of a window frame, the combination of channel irons adapted to be installed on opposite edges of a window frame, the inner flange of each channel iron being omitted at the lower portion thereof to form a clearance for the insertion of the interchangeable sash, a channel iron secured on the lower portion of the top member of the window frame, a spring in said channel iron for engaging the upper sash of the installation, and operative to exert pressure downwardly thereon, superimposed frames in the first mentioned channel irons, the contiguous portions of said frames having a tongue and groove joint between them, a member on a window sill of the frame, a plate having a tongue extending longitudinally of the latter member, and the lowermost of the frames having a groove into which the latter tongue is seated and held by the pressure of the spring in the channel iron.

2. In a combined storm and screen window installation insertable from the inside of a window frame, a channel iron secured to an upper member of the window frame with its flanges depending therefrom, a spring in the channel iron adapted to exert pressure downwardly, interchangeable storm and screen sash each having a tongue and groove joint at their contiguous surfaces, the upper sash being seated in the channel iron and engaging the spring therein, channel irons secured to the sides of the frame, the lower portion of the inner flanges of the channel irons being omitted to form clearances for the insertion of the sash between the flanges of the channel irons, a supporting member on the sill of the frame, a plate having a tongue secured to the said supporting member, the lower member of the lower sash of the window closure having a groove to receive the tongue of said plate when the two sashes are in alinement, the said tongue and groove joint between the sash and the tongue and groove joint at the bottom of the lower sash being maintained in close contact by the spring in the channel iron.

3. A combined storm and screen window installation according to claim 1, in which the channel irons each has a web the inner flange of which fits against the side of the sash and the outer flange thereof has an angular lip, the edge of which bears against the sash.

4. A combined storm and screen window installation according to claim 1, wherein each channel iron includes a web with an inner flange pressing against the inner side of the sash and an outer flange doubled on itself and extending across the sash in spaced relation thereto, and wherein the last mentioned flange has a lip whose edge bears against the sash.

JAMES W. GEE.