US00D847114S

(12) United States Design Patent

Miyata

(10) Patent No.: US D847,114 S
(45) Date of Patent: ** Apr. 30, 2019

(54) **SPEAKER**

(71) Applicant: **ANDEN CO., LTD.**, Anjo, Aichi-pref. (JP)

(72) Inventor: **Susumu Miyata**, Anjo (JP)

(73) Assignee: **ANDEN CO., LTD.**, Anjo (JP)

(**) Term: **15 Years**

(21) Appl. No.: **29/615,057**

(22) Filed: **Aug. 25, 2017**

(30) **Foreign Application Priority Data**

Mar. 6, 2017 (JP) 2017-004537

(51) **LOC (11) Cl.** **14-01**

(52) **U.S. Cl.**
USPC **D14/204**

(58) **Field of Classification Search**
USPC D14/167, 188, 204, 209.1, 210–215, 348, D14/352, 498–505; 181/143, 144, 148, 181/153, 157, 198, 199; 369/6–12; 381/300–303, 361–364, 366, 386–388
CPC H04R 1/02; H04R 1/021; H04R 1/023; H04R 5/00; H04R 9/06; H04R 2420/07
See application file for complete search history.

(56) **References Cited**

U.S. PATENT DOCUMENTS

D460,692 S * 7/2002 Cumberbatch D9/504
D543,350 S * 5/2007 Sanderson D3/201
D554,614 S * 11/2007 Lin D14/509
D577,356 S * 9/2008 Moon D14/168
D594,960 S * 6/2009 Orihara D23/366
D671,528 S * 11/2012 Fathollahi D14/211
D736,368 S * 8/2015 Xu D23/370

* cited by examiner

Primary Examiner — Derrick E Holland
Assistant Examiner — Janice Patyk
(74) *Attorney, Agent, or Firm* — Oliff PLC

(57) **CLAIM**

The ornamental design for a speaker, as shown and described.

DESCRIPTION

FIG. **1** is a front elevational view of a speaker, showing my new design;
FIG. **2** is a rear elevational view thereof;
FIG. **3** is a right-side elevational view thereof;
FIG. **4** is a left-side elevational view thereof;
FIG. **5** is a top plan view thereof;
FIG. **6** is a bottom plan view thereof;
FIG. **7** is a front, right-side, top perspective view thereof;
FIG. **8** is a rear, left-side, top perspective view thereof;
FIG. **9** is a front, right-side, bottom perspective view thereof; and,
FIG. **10** is a cross-sectional view thereof taken along line **10-10** in FIG. **1**.

The dot-dash broken lines immediately adjacent to the claimed areas in the views represent the boundaries of the design and form no part thereof. The broken lines in the figures illustrate the portions of the design that form no part of the claimed design. None of the broken lines form any part of the claimed design.

1 Claim, 5 Drawing Sheets

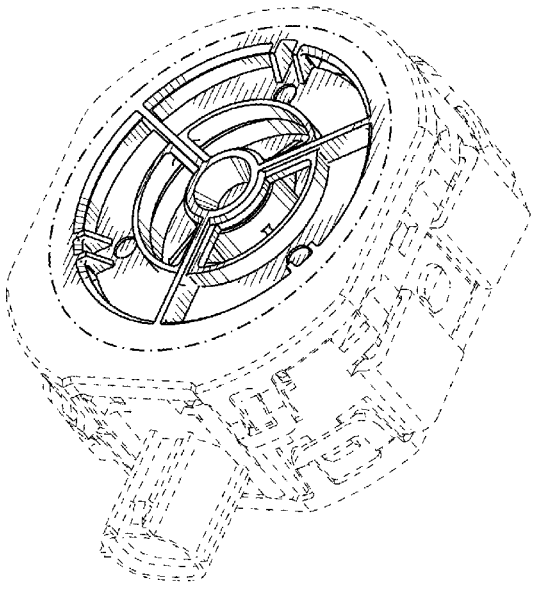

FIG. 1

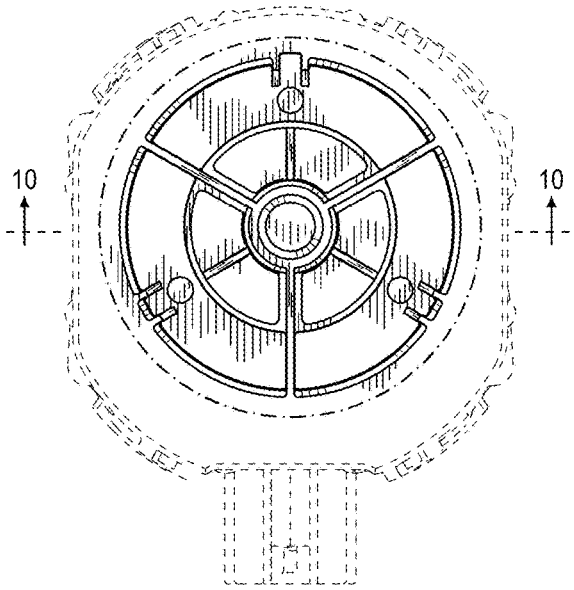

FIG. 2

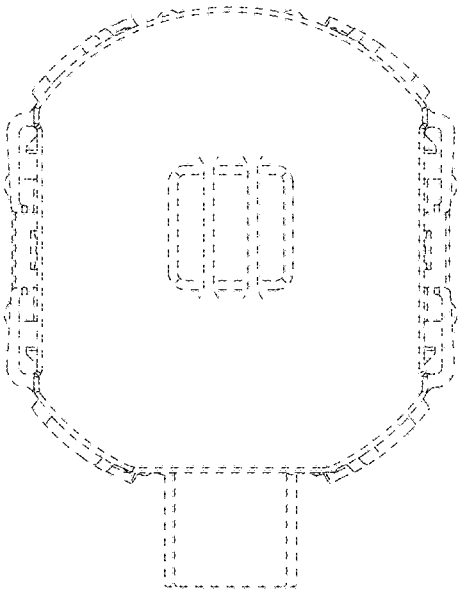

FIG. 3

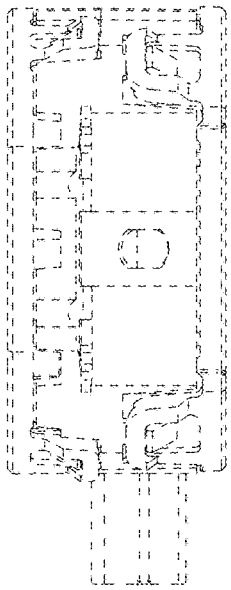

FIG. 4

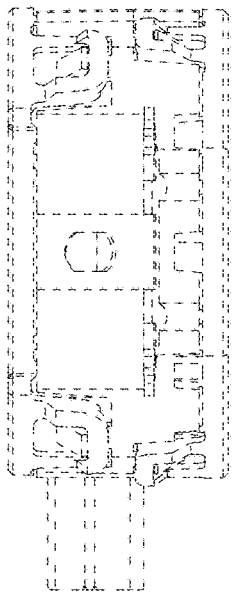

FIG. 5

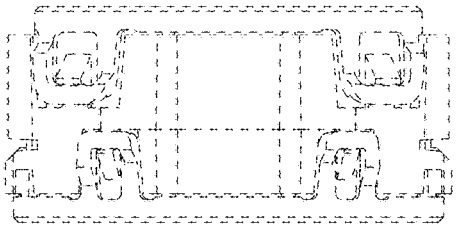

FIG. 6

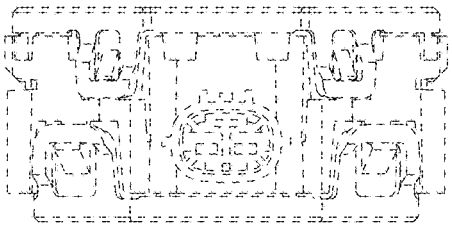

FIG. 7

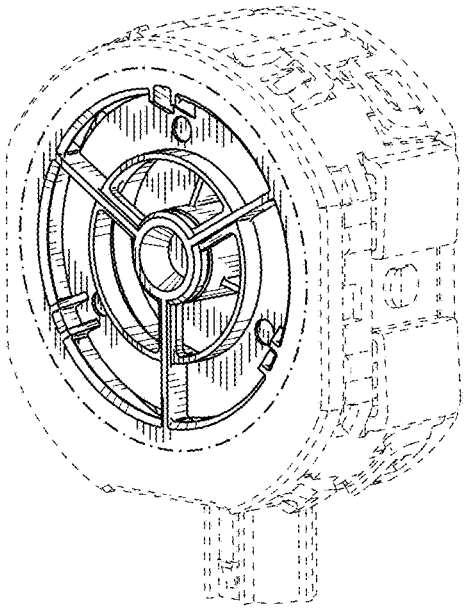

FIG. 8

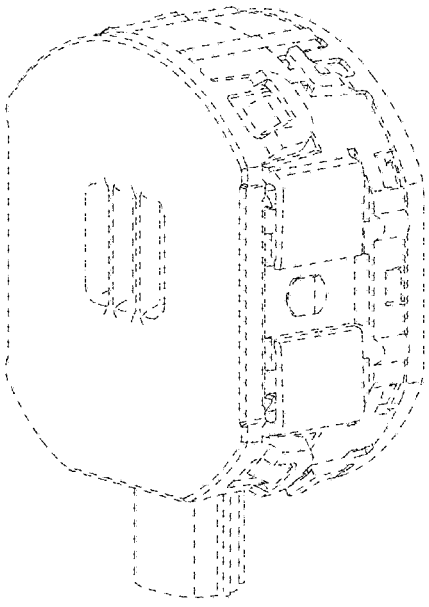

FIG. 9

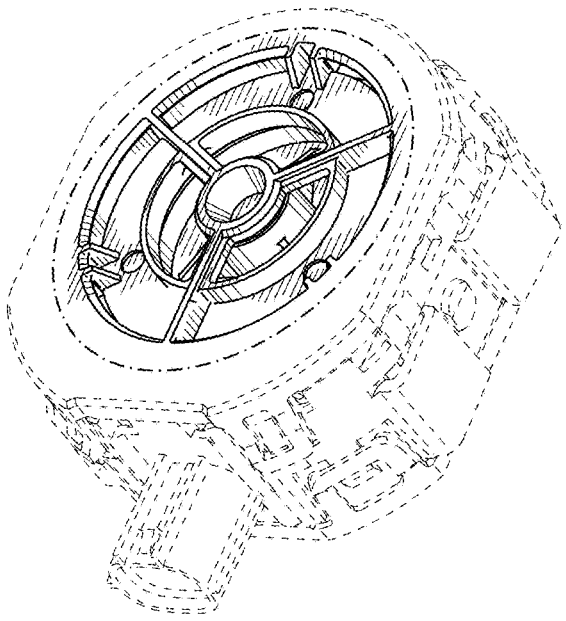

FIG. 10

