J. B. MITCHELL.

AIR COOLING AND PURIFYING APPARATUS.

APPLICATION FILED JULY 13, 1914.

1,170,658. Patented Feb. 8, 1916.

2 SHEETS—SHEET 1.

Fig. 1.

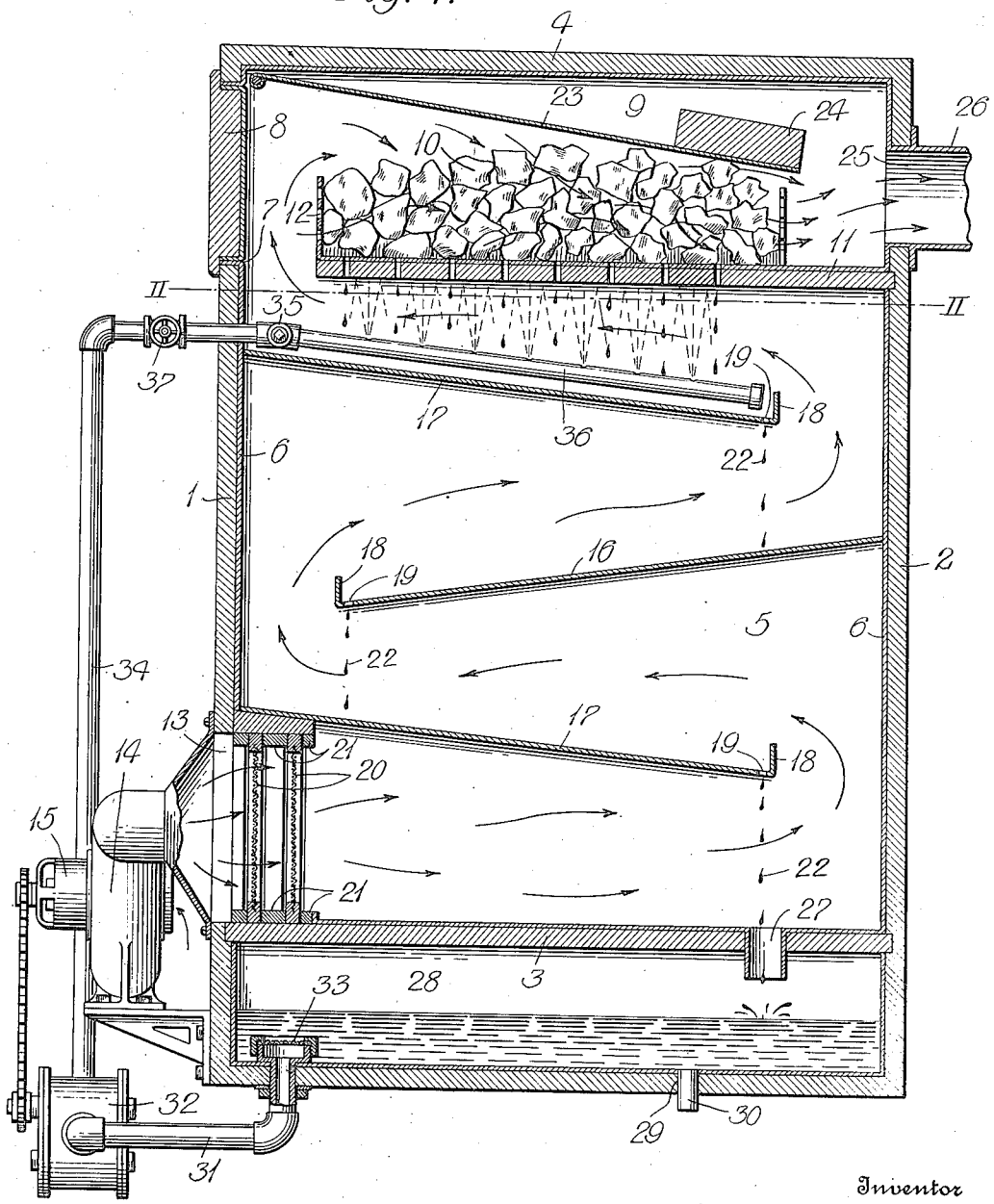

Witnesses

Chas. W. Stauffiger

Anna M. Dorr

Inventor

Joseph B. Mitchell,

By Barthel & Barthel

Attorneys

J. B. MITCHELL.

AIR COOLING AND PURIFYING APPARATUS.

APPLICATION FILED JULY 13, 1914.

1,170,658.

Patented Feb. 8, 1916.

2 SHEETS—SHEET 2.

Fig. 2.

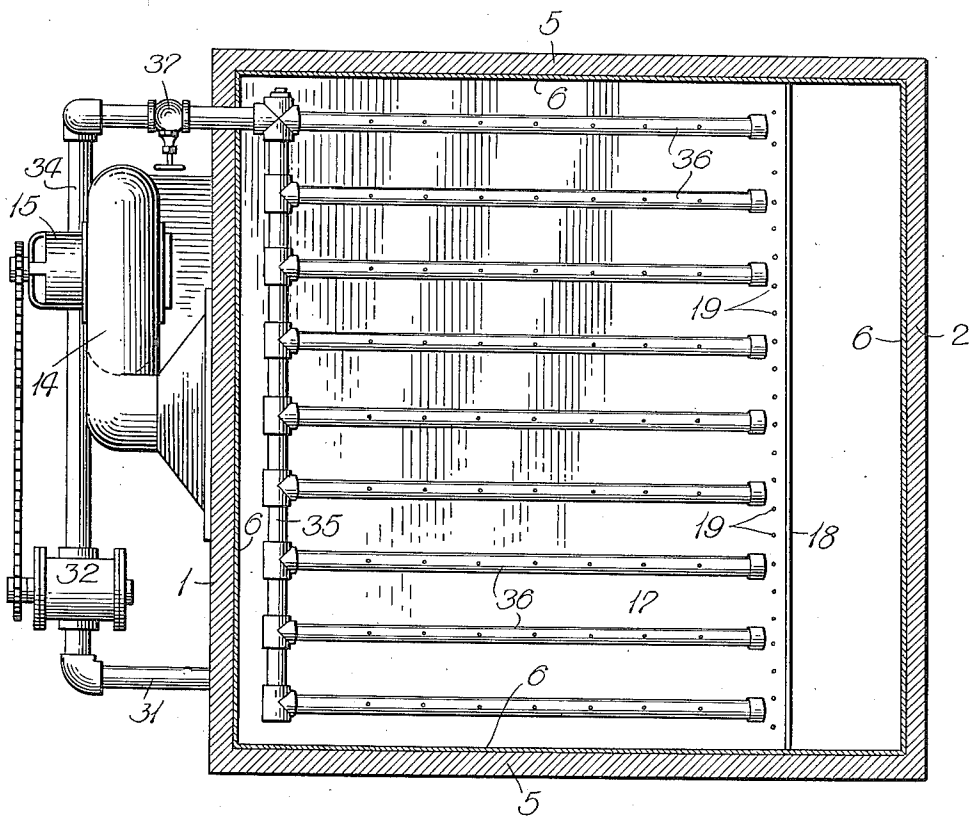

Witnesses

Chas. W. Stauffiger

Anna M. Dorr

Inventor

Joseph B. Mitchell,

By

Attorneys

UNITED STATES PATENT OFFICE.

JOSEPH B. MITCHELL, OF DETROIT, MICHIGAN.

AIR COOLING AND PURIFYING APPARATUS.

1,170,658. Specification of Letters Patent. Patented Feb. 8, 1916.

Application filed July 13, 1914. Serial No. 850,553.

To all whom it may concern:

Be it known that I, JOSEPH B. MITCHELL, a citizen of the United States of America, residing at Detroit, in the county of Wayne and State of Michigan, have invented certain new and useful Improvements in Air Cooling and Purifying Apparatus, of which the following is a specification, reference being had therein to the accompanying drawings.

This invention relates to an air cooling and purifying apparatus, and the primary object of my invention is to utilize screens and aqueous curtains or sheets for purifying air and a cooling agent, as ice, for reducing the temperature of the air.

A further object of this invention is to provide an air cooling and purifying apparatus that can be advantageously used in connection with moving picture auditoriums, and wherein a continuous circulation of cooled water is used for removing impurities of air that enters an auditorium for ventilating purposes.

With the above and other objects in view the invention resides in the novel construction, combination and arrangement of parts to be hereinafter specifically described and then claimed.

Reference will now be had to the drawings, wherein—

Figure 1 is a vertical sectional view of an apparatus in accordance with this invention; and Fig. 2 is a horizontal sectional view taken on the line II—II of Fig. 1.

The apparatus to be herein described can be constructed upon a large scale whereby it can be used in connection with office buildings and large theaters, but as intimated above it has been especially designed for moving picture auditoriums and small compartments. With this end in view, the apparatus has been made as compact as possible, simple in construction and with all parts assembled whereby easy access can be had to such parts of the apparatus as may need cleaning or repair.

The apparatus, as illustrated, comprises a housing or box like structure having a front wall 1, a rear wall 2, a bottom wall 3, a top wall 4 and side walls 5. All of these walls have a suitable lining 6 of zinc or a non-corrodible material, and the front wall 1, adjacent the top wall 4, has a doorway 7 normally closed by a door 8. The doorway 7 permits of easy access being had to the upper part of the housing, which constitutes a chamber 9 for a cooling agent 10, as ice. The ice is preferably crushed or in lump form and supported by a perforated platform 11 carried by the walls 2 and 5 and extending into proximity to the front wall 1. The forward edge of the platform 11 has a perforated ledge 12 which coöperates with the side walls 5 in retaining the ice upon the platform. The ledge 12 however, permits of air entering the chamber 9 and passing between the particles of ice.

Air is admitted to the housing at an opening 13 in the lower part of the front wall 1, and to force air therein a conventional form of blower 14 is connected to the front wall of the housing. This blower is preferably operated by an electric motor 15 receiving its energy from an electric lighting system or other source of electricity.

Arranged within the housing are a plurality of superimposed inclined trays 16 and 17. The trays are alternately arranged or in staggered relation with the trays 17 supported by the front walls 1 and the side wall 5, while the trays 16 are supported by the rear wall 2 and side walls 5. The trays 17 extend into proximity to the rear wall 2 and the trays 16 into proximity to the front wall 1, thereby providing a sinuous or winding passage for air from the lower part of the housing to the chamber 9 thereof. The inclined trays are made of a non-corrodible metal and the lower edges thereof are provided with ledges 18 and a series of perforations 19, the object of which will presently appear.

Air entering the opening 13 encounters one or more screens 20 that are detachably held between the bottom wall 3 and the lowermost tray 17 by cleats or guides 21 and one of the side walls 5 is slotted or cut away whereby the screens can be easily placed in position. The screens are preferably made of silk or of very fine gauze of interwoven wire, said screens holding in suspension dust and other foreign matter that may be carried into the housing by the air forced or blown therein.

It is through the medium of the perforated platform 11 that drippings or water from the ice 10 drains on to the uppermost inclined tray 17, flows down said tray and

through the perforations 19 thereon on to the tray 16 and so on until the bottom of the housing is reached. The drippings of the ice in passing from one inclined tray to another provide aqueous curtains or sheets 22 and it is through these curtains or sheets that the air must pass before entering the chamber 9 and encountering the ice therein. To deflect the air against the ice and thus prevent the air from passing over the ice the chamber 9 is provided with a gravity deflector 23. The deflector is pivotally supported contiguous to the front wall 1 and the inner end thereof has a weight 24 that holds the deflector normally upon the ice within the chamber, said deflector shifting by gravity as the ice melts.

The rear wall 2 of the housing has an exit or opening 25 in communication with the chamber 9 and said opening can discharge cooled and purified air direct into a room or auditorium or the air can be conveyed thereto by a suitable flue or conduit 26.

The bottom wall 3 of the housing has a slot or drain opening 27 for the ice drippings or water used in connection with the apparatus.

The apparatus thus far described simply uses the ice as a source of water to form aqueous curtains or sheets, and in order that an additional supply of water can be used or the ice drippings repeatedly employed or circulated through the apparatus, I provide a tank 28, which is preferably at the bottom of the housing. The tank 28 has the bottom thereof provided with an opening 29 normally closed by a plug 30, said opening permitting of the tank being drained and thoroughly cleansed. Extending into the tank is the suction pipe 31 of a pump 32, said pump being of the ordinary and well known type generally used for pumping water. The inner end of the suction pipe 31 has a screen or sieve 33 to prevent foreign matter, such as may be held in suspension by the ice, from entering the pump. The pump 32 can be driven from the electric motor 15 or from any other suitable source of power, and said pump has a discharge pipe 34 thereof extending upwardly contiguous to the opening 7 of the front wall 1. The upper end of the discharge pipe 34 has a header 35 and said header is provided with pipes or branches 36 that extend into the housing above the uppermost tray 17. The pipes or branches 36 have the upper sides thereof perforated whereby water can be discharged upwardly against the bottom of the perforated platform 11 to rebound on to the uppermost tray 17 and thereby provide a double aqueous curtain or sheet. The discharge pipe 34, adjacent the header 35 has a conventional form of valve 37 which permits of the discharge of water into the housing being regulated to conform to the capacity of the pump 32. The ice drippings can therefore be circulated through the apparatus and the cold water repeatedly used for purifying the air blown into the housing.

It is thought that the operation and utility of the apparatus will be apparent without further discussion, and while in the drawing there is illustrated a preferred embodiment of my invention, it is to be understood that the structural elements are susceptible to such changes, as in the size, shape and manner of assemblage, as falls within the scope of the appended claims.

What I claim is:—

1. An air cooling and purifying apparatus comprising a housing having air inlet and outlet openings, means in the upper part of said housing in a horizontal plane with the air outlet opening of said housing adapted to support an aqueous cooling agent, an inclined tray within said housing below said cooling agent adapted to receive drippings from the cooling agent and provide a plurality of aqueous curtains, pipes above said tray adapted to discharge water against the bottom of the cooling agent and coöperate with drippings from the cooling agent in providing double aqueous curtains, and means in the upper part of said housing inclined toward said air outlet opening and normally engaging the cooling agent for deflecting air into contact therewith.

2. An air cooling and purifying apparatus comprising a housing having air inlet opening in the bottom thereof and outlet opening in the side thereof at the top of said housing, said housing having a chamber in the upper end thereof adapted to contain an aqueous cooling agent, said chamber having the bottom thereof perforated, an air deflector arranged in the chamber of said housing inclined toward said air outlet opening and adapted to normally engage a cooling agent therein, an inclined superimposed tray within said housing and adapted to receive drippings from the cooling agent and provide a plurality of aqueous curtains, pipes above said tray adapted to discharge water against the bottom of said chamber between the peroforations thereof to rebound and coöperate with drippings from said cooling agent in forming double aqueous curtains, and a blower adapted to force air into said housing and through the aqueous curtains.

3. An air cooling and purifying apparatus comprising a housing having air inlet and outlet openings, a perforated platform in the upper part of said housing and adapted to support a cooling agent, inclined trays within said housing and providing a sinuous passage, a blower adapted to force air into said housing, perforated pipes within said housing above the uppermost tray and

adapted to discharge water against the bottom of said platform and to supply water to said trays and provide aqueous curtains at the ends of said trays and between said platform and the uppermost tray, and means for conveying water from the bottom of said housing to said perforated pipes.

In testimony whereof I affix my signature in presence of two witnesses.

JOSEPH B. MITCHELL.

Witnesses:

RAYMOND C. MITCHELL,

KARL H. BUTLER.