Oct. 10, 1933. M. J. MECHLING 1,930,103

CONTAINER

Filed Oct. 6, 1930

Fig. 1.

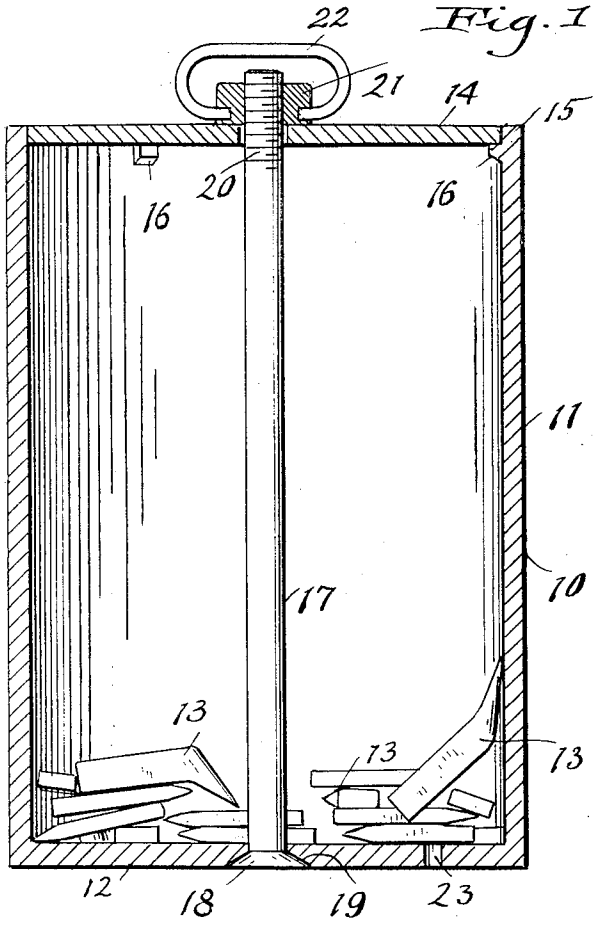

Fig. 3.

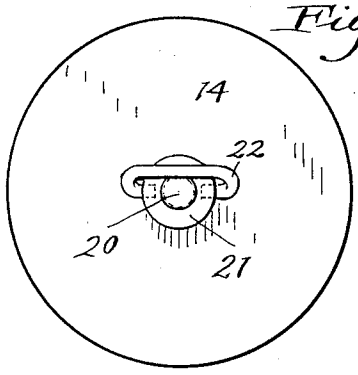

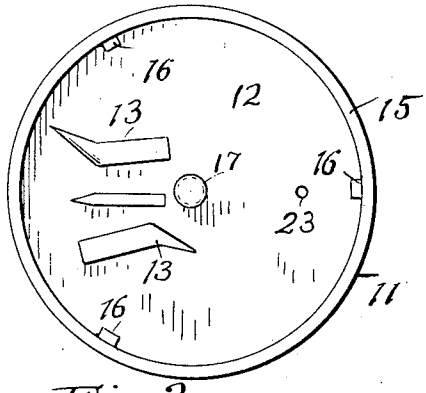

Fig. 2.

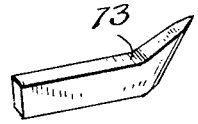

Fig. 4.

Inventor,
Monroe J. Mechling
Kerr Hudson & Kent
attys.

Patented Oct. 10, 1933

1,930,103

UNITED STATES PATENT OFFICE

1,930,103

CONTAINER

Monroe J. Mechling, St. Clairsville, Ohio

Application October 6, 1930. Serial No. 486,583

5 Claims. (Cl. 220—55)

This invention relates to containers, and more particularly to devices of this character which are constructed to withstand rough usage, and adapted to receive machine parts such as bits for mining machines, or the like.

It is an object of the present invention to provide a container adapted to transport articles from place to place in a safe and convenient manner.

Further objects are to provide a container which is cheap and simple in construction, with great durability, and having a minimum number of parts to wear, rust, break, or become lost.

Other objects and features of novelty will be apparent as the following description proceeds, reference being had to the accompanying drawing, in which

Figure 1 is a vertical cross section through a container according to the preferred embodiment of the present invention.

Fig. 2 is a top plan view of the container shown in Fig. 1, the cover being removed.

Fig. 3 is a top plan view of the cover for the container, and

Fig. 4 is a detail perspective view of a mining machine bit for which the container is particularly adapted.

While the container, according to the present invention, is of general application within the scope of the objects hereinbefore set forth, the same is particularly suitable for use in connection with mining machines for mining coal, clay, and the like, these mining machines being generally of the chain type, in which a series of bits are carried by the chain. The mining machine is maintained in operation at the face of the coal or clay, and as the bits become dulled, they are removed, and sharpened bits are substituted. This method permits the mining machine to be maintained in practically continuous operation. The dulled bits removed from the machine are placed in a container and transported to the surface where they are resharpened, replaced in the container, and returned to the mining machine for further use.

These containers are subjected to very rough usage, in being transported to and from the machine, and furthermore, they are often used as supports for lifting jacks for manipulating the mining machine and adjusting the same to positions most advantageous for proper cutting. The container according to the present invention is particularly adapted to withstand the rough treatment referred to above, as will hereinafter more fully appear.

Referring more particularly to the drawing, the container comprises a receptacle indicated generally at 10. This receptacle is preferably of a cup-like form comprising a cylindrical wall 11 and an integral flat bottom 12. The wall 11 and bottom 12 are preferably constructed of metal such as iron or steel and are comparatively thick, the container 10 being comparatively large so as to contain from 75 to 125 or more of the mining machine bits 13 shown in detail in Fig. 4 of the drawing. The bits are not necessarily placed in the container in any certain position, but are permitted to seek their own position upon being thrown into the container.

The receptacle 10 is provided with a cover 14 which is preferably a flat circular disc, although this form is not essential, this cover being of substantially the same thickness and material as the wall 11 and the bottom 12. The wall 11 terminates in an upper rim 15, and the cover 14 is preferably let down within the wall 11 so that the upper surface of the cover is flush with the rim. For this purpose an abutment is provided to locate the lid in the desired position, this abutment preferably comprising lugs 16 projecting inwardly from the wall 11 and spaced at intervals therearound, and at a distance below the rim 15 equal to the thickness of the cover 14. With this arrangement the cover 14 serves to reinforce the wall 11 against lateral strains and thus prevents crushing of the same.

To secure the cover 14 to the receptacle 10, a bolt 17 is provided, which preferably extends upward within the wall 11 and centrally of the receptacle 10. The bolt is provided with a head 18 which is perferably countersunk so as to engage a countersunk opening 19 in the bottom 12 so that the lower surface of the head 18 is flush with the lower surface of the bottom 12. The upper end of the bolt 17 is threaded as at 20 so as to receive a nut 21. The nut 21 is preferably located above the cover 14 and welded or otherwise rigidly secured thereto in such a manner that the cover 14 and the nut 20 form a single integral part.

A handle 22 is pivotally secured to the nut 21 so as to be carried thereby, and to facilitate the turning of the nut. When the nut 21 is integral with the cover 14 as shown in Fig. 3, the handle 22 serves as a handle for the cover, and when the nut is in engagement with the bolt 20 as shown in Fig. 1, the handle 22 serves as a handle for the entire container.

To free the container of moisture, the bottom

12 is preferably provided with a vent or drainage aperture 23.

From the foregoing description, it will be readily apparent that the container is of cheap and simple construction, and at the same time of great durability, the number of parts being reduced to a minimum. Also, the container is adapted to transport various articles from place to place in a safe and convenient manner.

While one embodiment of the invention has been illustrated and described in such detail as to enable anyone skilled in the art to practice the invention, nevertheless it will be understood that the invention is not to be limited to any of the details disclosed other than as necessitated by the development of the prior art, but instead it will be appreciated that the invention embraces such embodiments of the broad idea as fall within the scope of the appended claims, it being obvious that various changes may be made with respect to the disclosed embodiment without departing from the spirit of the invention.

Having thus described my invention, I claim:

1. In a container, a receptacle having side and bottom walls, inwardly projecting lugs carried by said side wall, a cover for said receptacle adapted to be received within said wall to engage said lugs, a bolt passing through said bottom wall and having a countersunk head, whereby said head is flush with the lower surface of said receptacle, a nut attached to said cover and engaging said bolt for securing said cover against said lugs, and a handle associated with said cover for turning said nut and serving as a handle for said container.

2. A container for mining machine bits comprising a receptacle having a cylindrical wall and a flat bottom integral therewith, said wall terminating in a rim, and having internal lugs spaced below said rim, a circular cover fitting inside said rim and supported by said lugs, said bottom having a countersunk central opening, a bolt passing through said opening and having a countersunk head flush with the lower surface of the bottom, said cover having a central opening receiving the upper end of said bolt, and a nut welded to said cover and engaging said bolt for securing the same against said lugs, whereby the edge of said circular cover is received within said rim to reenforce said wall against lateral strains.

3. In a container, a receptacle having side and bottom walls, inwardly projecting abutment means carried by said side wall, a cover for said receptacle adapted to fit within said side wall to engage said abutment means, a bolt carried by said bottom wall, and a nut attached to said cover and engaging said bolt to secure said cover against said abutment means.

4. In a container, a receptacle having side and bottom walls, inwardly projecting abutment means carried by said side wall, a cover for said receptacle adapted to fit within said side wall to engage said abutment means, a bolt carried by said bottom wall, a nut welded to said cover and engaging said bolt to secure said cover against said abutment means, and a handle associated with said cover for turning said nut and serving as a handle for said container.

5. A container comprising a tubular receptacle closed at one end, a cover for closing the open end of said receptacle, a rigid member extending through said cover and engaging the closed end of said receptacle, a nut attached to said cover and threaded on said member for securing the said cover in position, and a handle for said container attached to said cover.

MONROE J. MECHLING.