G. MELLEN.

CONTINUOUS CASTING MACHINE.

APPLICATION FILED NOV. 28, 1914.

1,139,887.

Patented May 18, 1915.

2 SHEETS—SHEET 1.

Fig. 2.

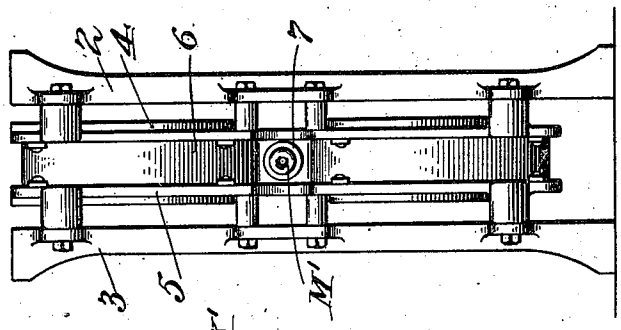

Fig. 1.

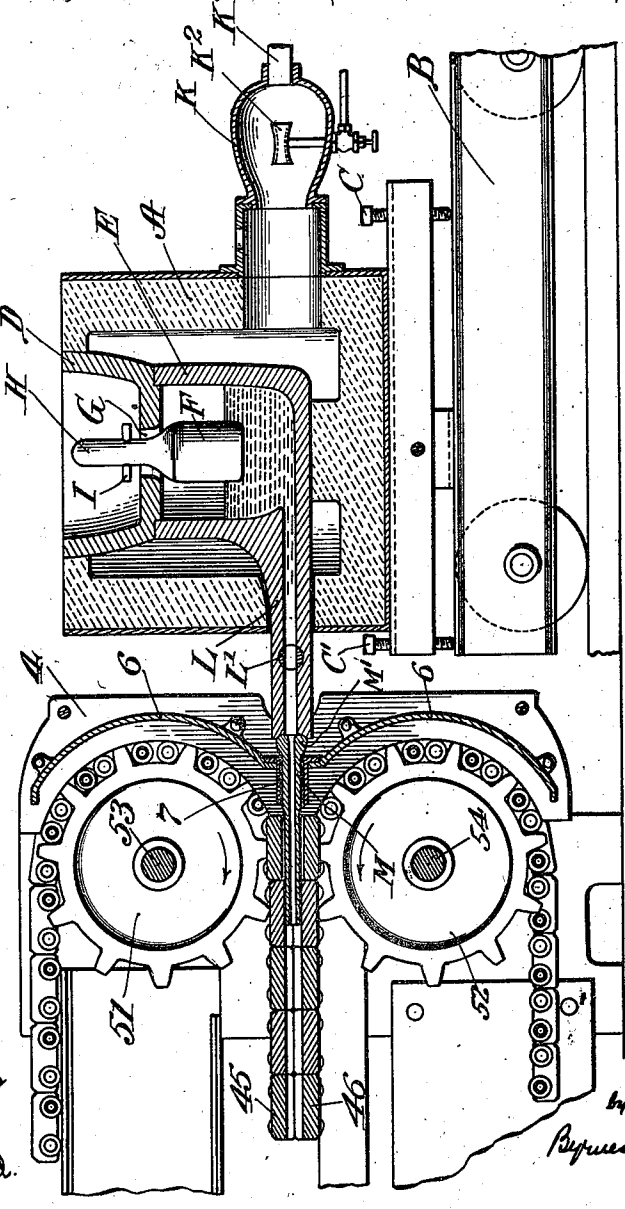

Witnesses
E. C. Tate.
N. P. Leonard.

Inventor
Grenville Mellen
by
Byrnes Townsend & Brickenstein
Attorneys

G. MELLEN.

CONTINUOUS CASTING MACHINE.

APPLICATION FILED NOV. 28, 1914.

1,139,887.

Patented May 18, 1915.

2 SHEETS—SHEET 2.

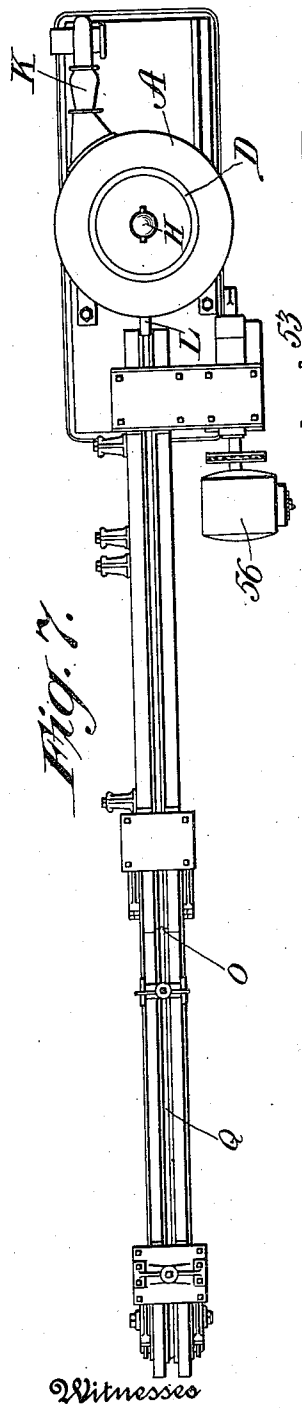

Fig. 7.

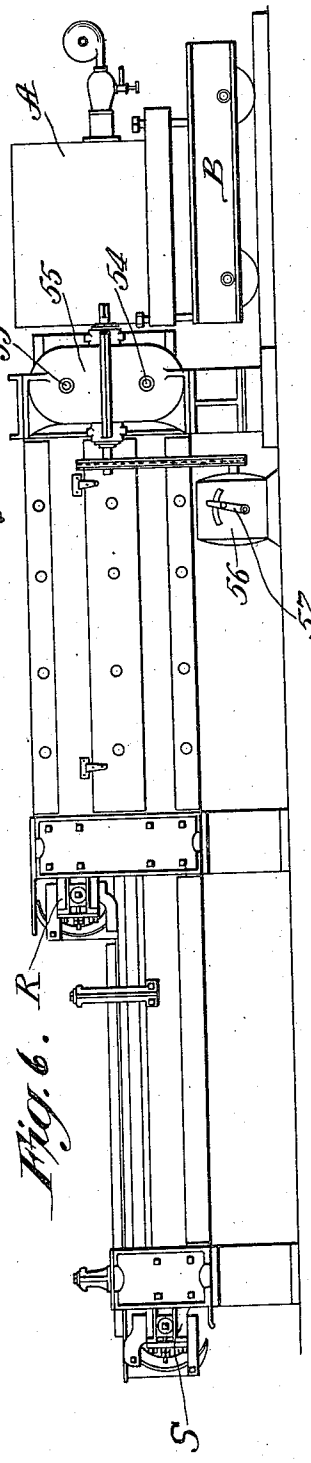

Fig. 6.

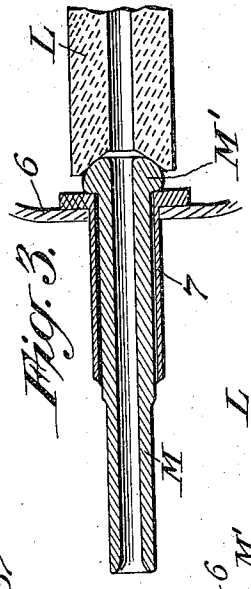

Fig. 3.

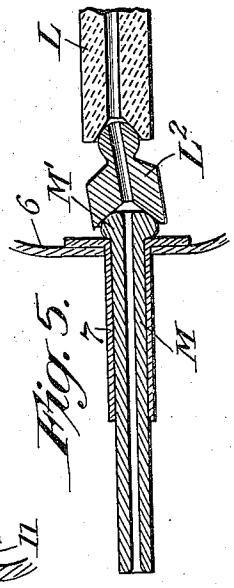

Fig. 5.

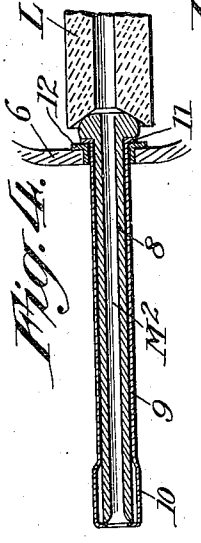

Fig. 4.

Witnesses

E. C. Jate.

N. P. Leonard.

Inventor

Grenville Mellen

by Byrnes Townsend & Brickenstein

Attorneys

UNITED STATES PATENT OFFICE.

GRENVILLE MELLEN, OF WEST ORANGE, NEW JERSEY, ASSIGNOR TO CONTINUOUS CASTING CORPORATION, OF NEWARK, NEW JERSEY, A CORPORATION OF VIRGINIA.

CONTINUOUS CASTING-MACHINE.

1,139,887. Specification of Letters Patent. Patented May 18, 1915.

Application filed November 26, 1914. Serial No. 874,400.

To all whom it may concern:

Be it known that I, GRENVILLE MELLEN, a citizen of the United States, residing at Llewellyn Park, West Orange, in the county of Essex and State of New Jersey, have invented certain new and useful Improvements in Continuous Casting-Machines, of which the following is a specification.

My invention relates to certain improvements in method and apparatus for casting rods, bars, or other forms of metal in long or indeterminate lengths, and has for its object to provide an improved method of operation, as well as better ways of introducing the metal into the casting machine.

By practical experience with continuous casting machines of the type shown in my copending application Serial No. 839,045, filed May 16, 1914, and comprising series of coöperating moving mold blocks, I have found that successful operation depends upon several factors, (1) the speed or rate of flow of the metal into the molds; (2) the fluidity of the metal; and (3) the rate of movement of the mold blocks forming the mold. By my invention, the first factor is automatically controlled by providing for the maintenance of a uniform hydraulic head of molten metal in the receptacle from which the molten metal is delivered. The fluidity of the molten metal is however difficut to accurately control, as it is affected by variations in temperature, variations in composition and other causes. It is therefore necessary to provide for variations in the speed of the moving mold-block, and this I effect by using as the driving means, a variable speed electric motor having means for varying its speed. The operator can thus quickly alter the speed at which the moving walls of the mold are progressing to insure the production of a solid, continuous, unbroken rod or bar.

My invention further relates to a means for preventing clogging of the moving mold mechanism by leakage or overflow of metal, said means consisting of a shield or guard arranged at the point of introduction of molten metal into the machine; and further relates to the special construction or arrangement of the conduits through which molten metal is delivered from the molten-metal receptacle into the continuous casting machine.

Other objects and features of invention will appear from the specification and claims.

In the drawings—Figure 1 is a vertical section through the charging end of the continuous casting machine and the molten-metal receptacle; Fig. 2 is an end view of the continuous casting machine, with the metal delivery devices removed; Fig. 3 is an enlarged sectional view of one form of molten metal delivery pipe; Fig. 4 is a modification of the construction shown in Fig. 3; Fig. 5 is a detail view of a form of delivery conduit; Figs. 6 and 7 are respectively elevation and plan of the whole machine.

Referring to Fig. 1, the molten-metal delivery mechanism comprises a casing A, preferably of metal and having a refractory lining, mounted on a carriage B, and capable of adjustment thereon by means of screws C, C′. Within the casing A is a crucible D, having a perforated bottom. Fitted against the bottom of the crucible is the extension E, within which is mounted a float F, having its upper portion shaped to engage the walls of the perforation G. The float F has an upwardly projecting portion H, provided with a cross-bar I to prevent the float from sinking too far downward. A burner casing K, having an air inlet K′ and a fuel feed K^2, serves to keep the metal in the crucible D and extension E in a molten condition. Metal is discharged from extension E through a discharge pipe L, which may be provided with a valve L′. This discharge pipe L has at its delivery end a socket into which fits the rounded head M′ of a delivery tube M extending into the mold-cavity of the casting machine. The construction of this machine, illustrated in Figs. 6 and 7, is described in detail in my application above referred to. It comprises an upper endless chain of mold-blocks passing around the sprocket 51 and a corresponding sprocket mounted in the housing R (Fig. 6); and a second endless chain of mold-blocks passing around sprocket 52 and a sprocket mounted in housing S. The mold blocks have coöperating cavities, so that when the two series of mold-blocks are brought into engagement, a continuous mold cavity is formed.

In Fig. 1, is shown only the receiving end of the machine, at which are mounted the sprocket wheels 51, 52, mounted on shafts

53, 54, which drive two endless chains of co-operating mold blocks 45, 46. The shafts 53, 54 are driven by any suitable gearing, inclosed in casing 55 (Fig. 6), this gearing being in turn driven by a variable speed motor 56, preferably an electric motor, provided with a suitable controller 57. Secured to the side frames 2, 3, of the machine are guide-pieces 4, 5, having curved inner faces, corresponding in radius to the sprocket-wheels engaging the rollers on the mold-blocks. Bolted between these guides is a guard or shield 6 having an opening in line with the mold cavity, and in this opening is secured a sleeve or nipple 7, through which passes the delivery tube M, as shown in Fig. 5. This tube M may be made of any suitable material such as graphite, graphite-crucible clay, alundum or other refractory material.

In Fig. 4 is shown a modified form of delivery tube M^2, comprising an inner tube 8 of refractory material, surrounded by a loosely fitting outer tube 9 of steel having at one end an enlargement 10 having approximately the diameter of the mold cavity and having at its other end a flange 11 engaging a split collar 12 mounted in the opening in the guard plate 6.

In Fig. 5, the delivery tube M is connected to the discharge tube L, by an intermediate tube L^2 having at one end a socket engaging the head M′ of the tube M, and at the other end a ball engaging a socket in the end of tube L. This arrangement has the advantage that the tubes L and M need not be brought into such exact alinement, as the intermediate tube can adjust itself to the required position.

In operation, the delivery tube M or M^2 is inserted into the opening in the guard plate 6, this opening and sleeve 7 serving to guide the tube into the mold cavity. The molten metal receptacle or casting pot is then moved up, and adjusted until the head M′ is in engagement with the tube L, or in case the device shown in Fig. 5 is used, the tube L^2 is held in engagement with the head M′ and the casting pot is moved up until the ball of tube L^2 is in engagement with the socket in the end of discharge pipe L. Molten metal is then poured into the crucible D and passes through opening G, rising in extension E to a height determined by the float F, which acts as a valve to close the opening G. By proper adjustment of the size and weight of the float F, the height of the molten metal in the extension E is maintained at the desired point. The motor 56 is then started and the chains of mold-blocks are thus caused to move at a speed sufficient to enable a solid rod to be formed within the mold cavity, and delivered therefrom, at the point O, Fig. 7, where the upper and lower series of mold blocks are separated, the formed rod being supported on the lower chain which extends, as indicated at Q, beyond the upper chain. The proper rate of travel of the mold chains is determined by experience, and the machine is run, at the start, approximately at this rate. The valve L′ is opened, thereby admitting molten metal into the mold cavity formed by the moving mold-blocks. As soon as the formed rod or bar appears at the point O (Fig. 7), where the upper and lower series of molds separate, the operator can determine by inspection whether the proper speed is being attained, and can then by adjustment of the controller 57, exactly regulate the speed so that a uniformly solid and complete rod is thereafter continuously produced.

I claim:—

1. In a continuous casting machine comprising series of traveling mold sections fitting together to form a continuous mold, the combination of means for delivering the molten metal under a constant hydraulic head, and a variable speed motor for driving the mold sections, the motor having means for controlling its speed.

2. In a continuous casting machine comprising series of traveling mold sections fitting together to form a continuous mold, a shield having an opening in line with the axis of the mold cavity.

3. In a continuous casting machine comprising series of traveling mold sections fitting together to form a continuous mold, a shield having an opening in line with the axis of the mold cavity and a delivery tube extending through said opening into the mold cavity.

4. In a continuous casting machine comprising series of traveling mold sections fitting together to form a continuous mold, a shield having an opening in line with the axis of the mold cavity and a delivery tube extending through said opening into the mold cavity and having an enlarged ball-shaped head outside said opening.

5. In a continuous casting machine comprising series of traveling mold sections fitting together to form a continuous mold, the combination of a delivery tube extending into said mold cavity and having a ball-shaped head thereon, and a second tube having at one end a socket to coöperate with said head and at its other end a ball-shaped head, and a molten-metal discharge tube having a socket to coöperate with the head of said second tube.

6. In a continuous casting machine comprising series of traveling mold-sections fitting together to form a continuous mold, a receptacle for molten metal, means for heating the receptacle, means for delivering the molten metal from the receptacle under a constant hydraulic head, and a variable speed motor for driving the mold-sections,

the motor having means for controlling the speed.

7. In a continuous casting machine comprising series of traveling mold-sections fitting together to form a continuous mold, a receptacle for molten metal, means for delivering the molten metal from the receptacle under a constant hydraulic head, and a variable speed motor for driving the mold-sections, the motor having means for controlling the speed.

8. In a continuous casting machine comprising series of traveling mold-sections fitting together to form a continuous mold, a receptacle for molten metal, means for delivering the molten metal from the receptacle under a constant hydraulic head, means for moving the molds, and means for varying the speed at which the molds travel.

In testimony whereof I affix my signature in presence of two witnesses.

GRENVILLE MELLEN.

Witnesses:
JOHN O. BIGELOW,
M. E. WILCOX.