(No Model.) 2 Sheets—Sheet 1.

E. A. HALDEMAN.

DRAFTING BOARD.

No. 408,970. Patented Aug. 13, 1889.

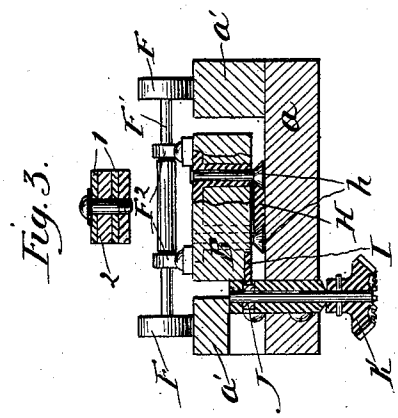

Fig. 3.

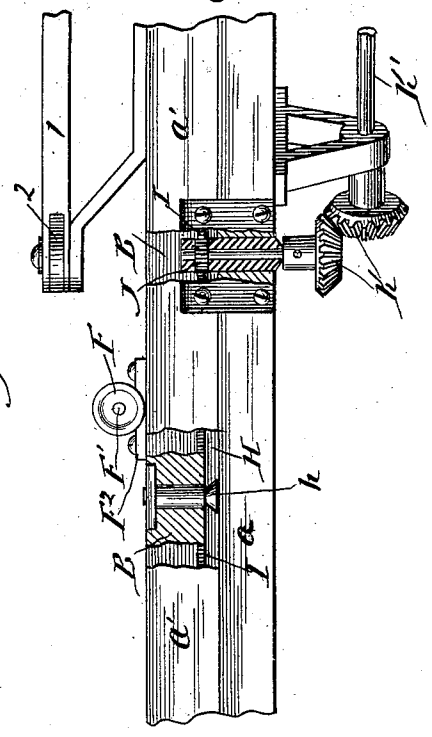

Fig. 4.

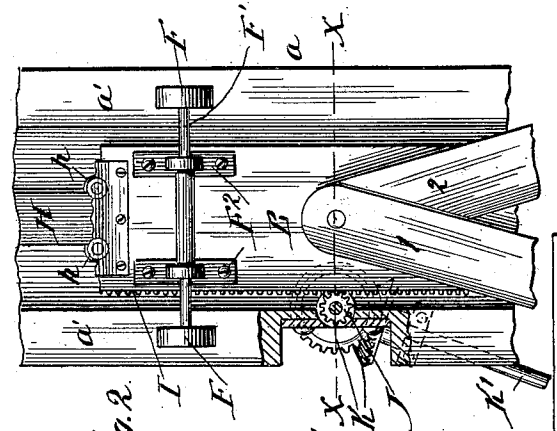

Fig. 2.

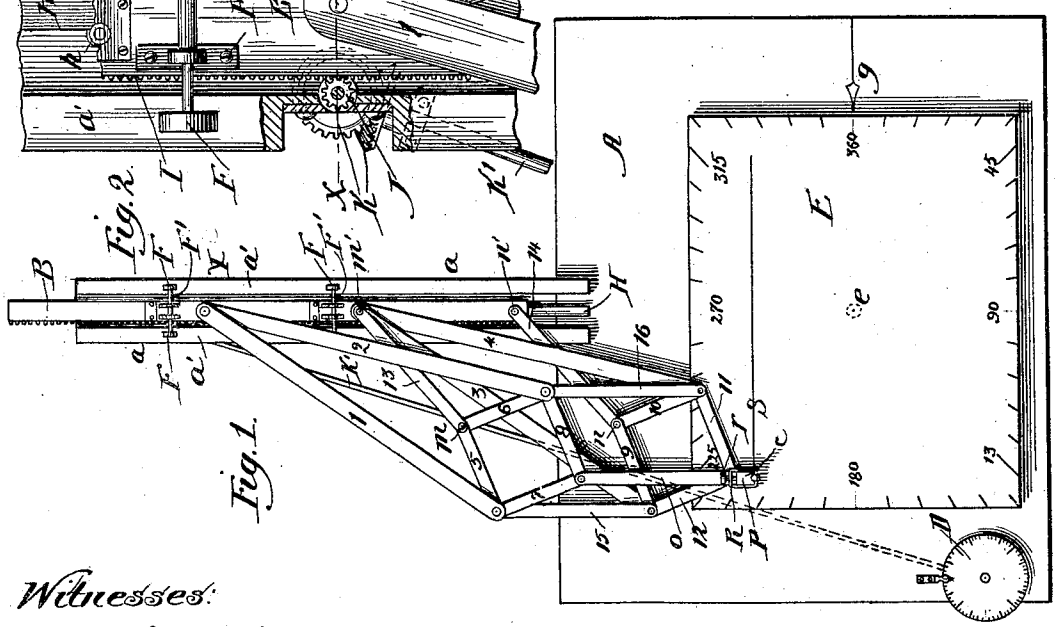

Fig. 1.

Witnesses:
H. B. Hallock
D. W. Bond.

Inventor:
Ephraim A. Haldeman

N. PETERS, Photo-Lithographer, Washington, D. C.

(No Model.) 2 Sheets—Sheet 2.

E. A. HALDEMAN.

DRAFTING BOARD.

No. 408,970. Patented Aug. 13, 1889.

Fig. 5

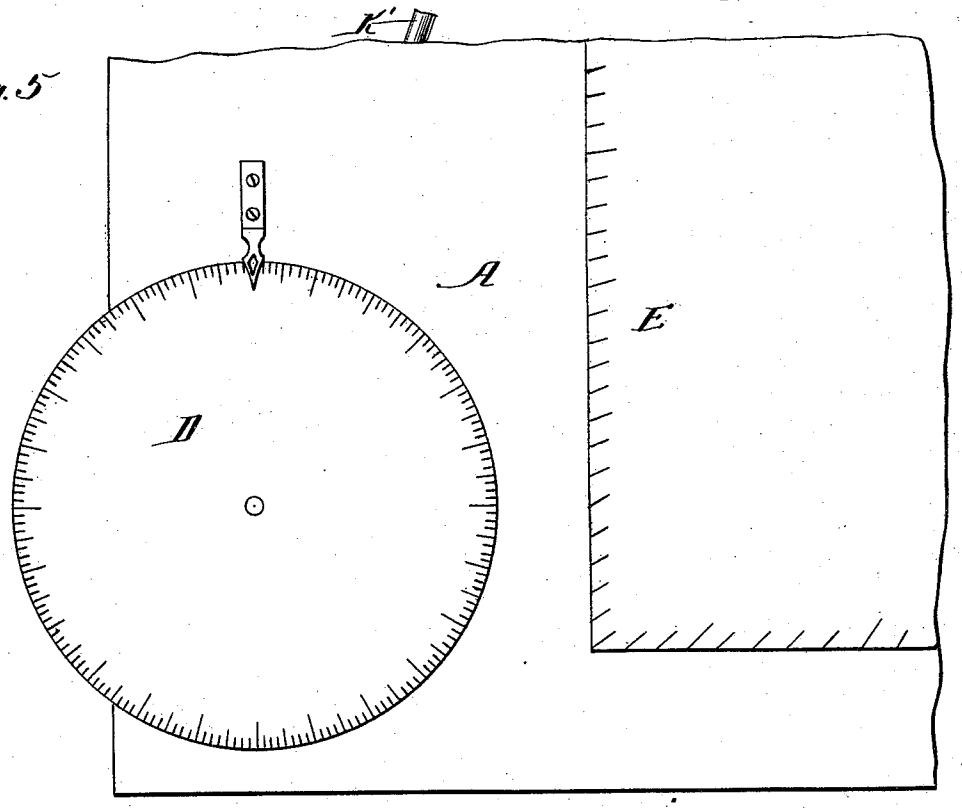

Fig. 6.

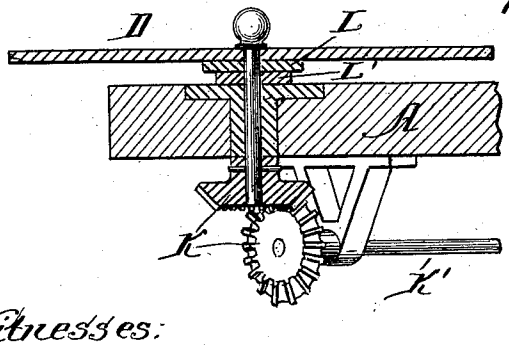

Fig. 7.

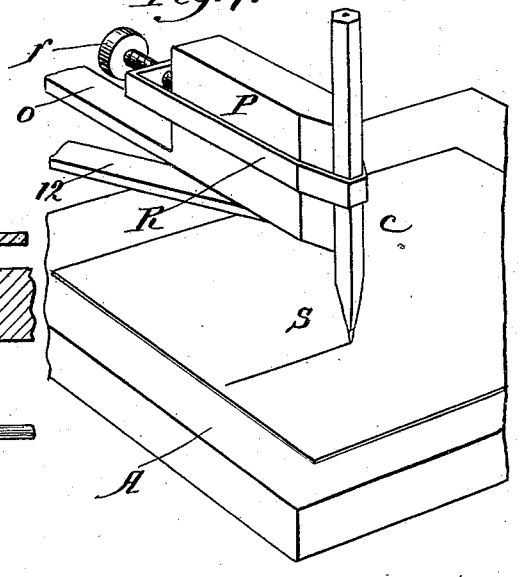

Witnesses:

H. B. Hallock.

W. P. Bond.

Inventor:

Ephraim A. Haldeman

N. PETERS, Photo-Lithographer, Washington, D. C.

UNITED STATES PATENT OFFICE.

EPHRAIM A. HALDEMAN, OF CHICAGO, ILLINOIS.

DRAFTING-BOARD.

SPECIFICATION forming part of Letters Patent No. 408,970, dated August 13, 1889.

Application filed September 18, 1888. Serial No. 285,698. (No model.)

To all whom it may concern:

Be it known that I, EPHRAIM A. HALDEMAN, a citizen of the United States, residing at Chicago, in the county of Cook, State of Illinois, have invented a new and useful Drafting-Board and Attachments, of which the following is a full and concise description and specification.

My invention relates to drafting-boards, and comprises a combination of drafting-board, frame, or table, and attachments, the object of which is to lighten the labor of making mechanical or architectural drawings by dispensing with the use of various instruments and attaining greater speed and accuracy. The means by which I attain these objects through my invention may be briefly said to consist in the new and novel arrangement, construction, and adaptation of the several various parts, viz: A drawing-board pivoted at its center to a frame or table, said frame or table having an extension on one end, on which is attached a carriage moving to and fro. Supported by said carriage and extending over the drawing-board is a device for holding a pen or a pencil, which, being moved from side to side by gentle pressure of the hand, produces parallel straight lines at right angles with the line of motion of carriage. The carriage is provided on its lower edge with a rack whose teeth are acted on by a pinion fixed to extension of frame and connected by geared wheels and shaft to a dial at opposite end of frame, the object of the dial being to move carriage, and consequently the pen or pencil point, any required distance or space; and that the construction, operation, and advantages of my invention may be further and fully explained and described, I have illustrated in the accompanying drawings an embodiment of the general features of the invention, of which—

Figure 1 is a diagram showing the frame A, extension *a*, carriage B, pen and pencil holder *c*, connected arms and links C, dial D, and board E, pivoted to frame at center *e*. Fig. 2 represents in full-size detail the arrangement of mechanism of carriage, frame, and arms at point *x* on diagram, Fig. 1. Fig. 3 is a vertical section of the same cut at line *x x*. Fig. 4 shows side elevation at point *x* on diagram, Fig. 1. Fig. 5 shows plan of dial D, part of frame A, and corner of board E. Fig. 6 is a vertical section of Fig. 5 cut at line *y y*. Fig. 7 is a perspective view of the front part of the carrier with pencil attached and showing position of paper plane S.

Similar characters of reference represent similar parts in the several views.

Referring to the drawings, A represents the frame or table having an arm *a* extending from one end. To the table proper is pivoted the board E at its center *e* and divided on its outer edges with the degrees of the circle, and having an indicator *g* fastened to frame outside of radius of board, thus making the board a complete protractor of itself.

To the carriage B are pivoted the arms 1 2 3 4, carrying the parallelograms of links 5 6 7 8 and 9 10 11 12, whose converging points *m* and *n* are connected by radial links 13 and 14 to corresponding fixed points on carriage B at *m'* and *n'*, and to the opposite converging points is pivoted the part which I shall designate the "carrying-beam" *o*, to which is attached the pen or pencil, as shown in perspective in Fig. 7. The outside converging points right and left of the parallelograms are connected by auxiliary links 15 and 16, respectively. This combination and arrangement of arms and links pivotally connected and described above I shall designate the "pen or pencil carrier," since its object is to carry the pen or pencil in straight parallel lines.

In Fig. 2, (showing in detail the mechanism at and near the point marked *x x* in Fig. 1,) *a* is the extension of frame A, the top piece *a'* having a smooth surface or metal plate for periphery of wheels F F to rest on, the shaft F' and hangers F^2, fastened to bed of carriage B, allowing it to move with the minimum of friction. To obviate lateral motion, the plate H, having beveled edges, is fastened to frame. Bearings and pulleys *h h*, with head beveled to fit beveled edge of plate H, are fastened to bed of carriage and, in contact with plate H, prevent lateral motion, and also prevent the carriage from tilting forward. Rack I, fastened to carriage B, is acted on by pinion J and connected by beveled gearing K K and shaft K' to dial-plate D, Fig. 5, the dial-plate being divided into any required number of graduations.

In this case it is divided, for convenience, into "twenty-fourths" of "one inch and a half;" hence one complete revolution of the dial represents one inch and a half—the distance traveled by the pen or pencil point. In moving the dial one division—for example, from 1 to 2—the pen or pencil point moves one-sixteenth of an inch; hence it will be observed that any measurement can be read off the dial and accurately recorded by the pen or pencil point without the aid or use of graduated scales or dividers. A ratchet-wheel L, Fig. 6, with finely-graduated teeth and ratchet mechanism worked by lever L′, may be used for close lines at regular distance—for example, section-lining.

Referring to Fig. 7, (a perspective view of the front part of carrier, marked *c* on diagram Fig. 1,) P is a form grooved on the end in conformity with the shape of pen or pencil, which being placed in position, as shown, the metal band R is drawn back by means of thumb-screw *r*, and thus the pen or pencil is held rigidly perpendicular in respect to the paper plane S. It will be readily understood that by this novel method of combining the different parts of the machine—all simple in construction and operation—I obtain as a result a machine wherewith a draftsman can accomplish the most difficult example of mechanical drawing without the use of T-square, straight-edge, triangles, protractor, divided scales, or dividers. The carrier attachment, being operated from anti-friction pivotal points, serves as a perfect parallel ruler, carrying the pencil or pen when not in use free of the paper plane.

When desiring to draw lines, a slight downward pressure brings the pencil-point in contact with the paper, and lateral motion imparted by the hand produces lines of any desired length. The dial at the left can be read for any measurement desired, and revolving the dial to the reading moves the pencil-point the required space. The board, either circular or square and divided on its outer edges into the degrees of the circle and provided with an indicator *g*, as shown, Fig. 1, may be revolved to any desired degree and lines produced at an angle coincident to the reading on the edge of the board, as shown by the indicator, thus doing the work of a protractor or triangle and with greater speed and accuracy.

The rack-and-pinion motion, in connection with the dial for the purpose of measuring the various distances and spaces in plotting or designing mechanical or architectural drawings, gives greater ease and precision than is afforded by any other means in use.

The ratchet mechanism L and L′, in connection with carrier *c* and revolving board E, forms a complete section-liner rapid and simple in operation, the carrier *c* holding the pen or pencil always perpendicular and continuously at the same angle while moving in its path from left to right, or vice versa, and leaves the paper plane entirely free from the obstruction of straight-edge, triangles, or other instruments, enabling the operator to see every detail of his work, this feature of the machine greatly facilitating the progress of the draftsman in his operations.

Having thus described the main features of my invention, what I claim as new, and desire to secure by grant of Letters Patent, is—

1. A drafting-board E, either circular or square, divided on its outer edge by the degrees of the circle and pivoted at its center to and in combination with a frame or table A, having an arm *a* extending from one side, to which is fitted a carriage B, to which is attached by means of anti-friction pivots the carrier *c*, and connected by rack I, pinion J, geared wheels K K, and shaft K′ to dial-plate D, substantially as and for the purpose specified.

2. The combination of a frame or table A, extension *a*, carriage B, anti-friction pen and pencil carrier *c*, dial D, connected by shaft and beveled gearing to pinion J, acting on rack I, attached to lower part of carriage B, substantially as and for the purpose specified.

3. The combination of pen and pencil carrier *c*, composed of the arms 1 2 3 4, carrying, respectively, the parallelograms of links 5 6 7 8 and 9 10 11 12, connected at their converging points by radial links 13 14, auxiliary links 15 16, and carrying-beam *o*, all pivoted and supported by carriage B, and in combination with board E, substantially as and for the purpose specified.

4. The combination, in a drafting-machine, of the carrier *c*, holding a pen or pencil and moving same to and fro over a drawing-board divided on its outer edges with the degrees of the circle, pivoted at its center and in connection with an indicator *g*, substantially as and for the purpose specified.

5. In a drafting-machine, a revolving dial D, divided on its outer edge into the numerical parts of 12, representing feet and inches, or into any multiple of 100, to represent the metric system of measurement, connected by shaft and gearing to rack-and-pinion motion on carriage B, substantially as and for the purpose specified.

EPHRAIM A. HALDEMAN.

Witnesses:
JOHN J. D'ARCY,
GEORGE ENNIS.