W. SHROPSHIRE.

TRAIN STOP.

APPLICATION FILED APR. 9, 1915.

1,167,224.

Patented Jan. 4, 1916.

2 SHEETS—SHEET 1.

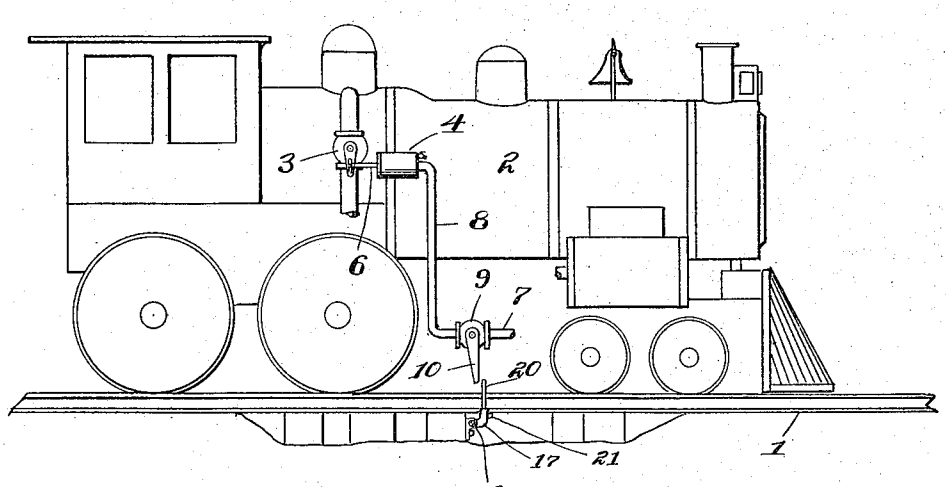

Fig. 1

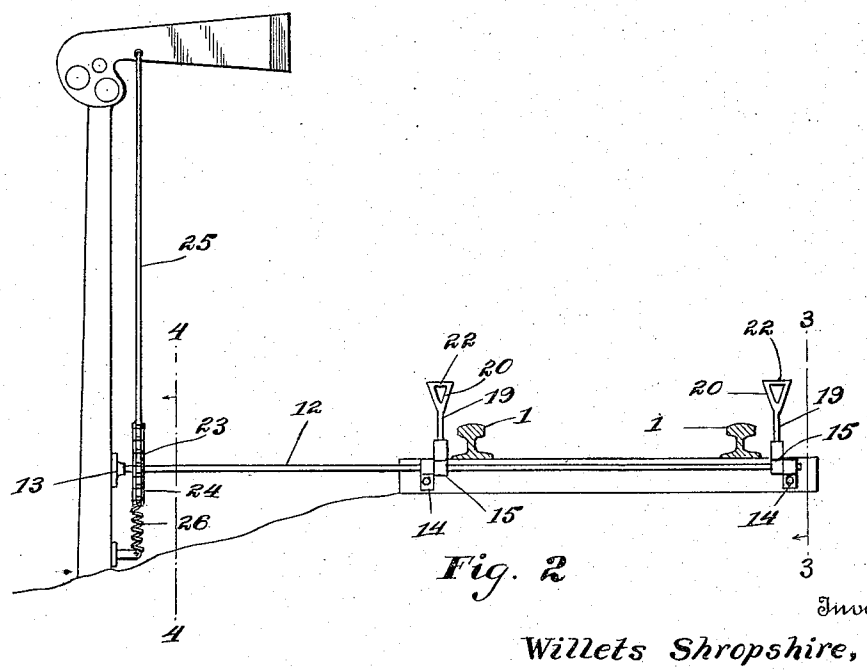

Fig. 2

Inventor

Willets Shropshire,

By Victor J. Evans

Attorney

Witnesses

C. F. Rudolph

John J. McCarthy

COLUMBIA PLANOGRAPH CO., WASHINGTON, D. C.

W. SHROPSHIRE.

TRAIN STOP.

APPLICATION FILED APR. 9, 1915.

1,167,224.

Patented Jan. 4, 1916.

2 SHEETS—SHEET 2.

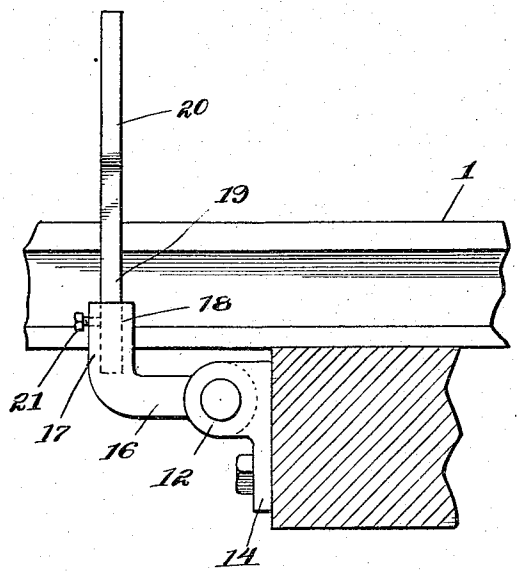

Fig. 3

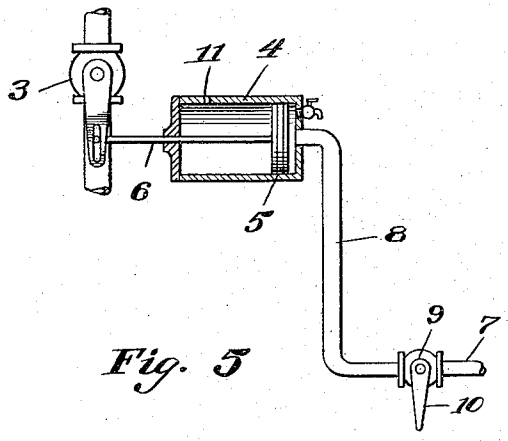

Fig. 5

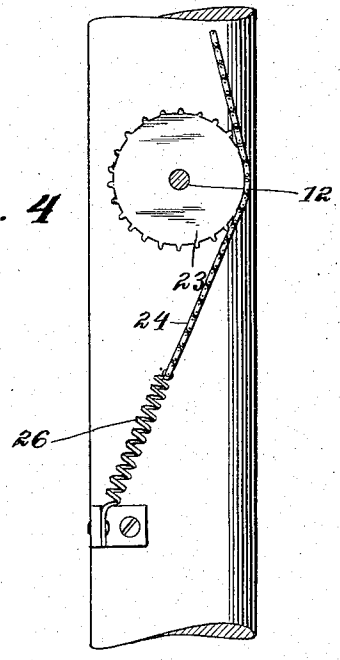

Fig. 4

Inventor

Willets Shropshire,

By Victor J. Evans

Attorney

Witnesses

C. F. Rudolph

John J. McCarthy

COLUMBIA PLANOGRAPH CO., WASHINGTON, D. C.

UNITED STATES PATENT OFFICE.

WILLETS SHROPSHIRE, OF PORT ELIZABETH, NEW JERSEY.

TRAIN-STOP.

1,167,224. Specification of Letters Patent. Patented Jan. 4, 1916.

Application filed April 9, 1915. Serial No. 20,286.

To all whom it may concern:

Be it known that I, WILLETS SHROPSHIRE, a citizen of the United States of America, residing at Port Elizabeth, in the county of Cumberland and State of New Jersey, have invented new and useful Improvements in Train-Stops, of which the following is a specification.

This invention relates to certain novel and useful improvements in automatic train stopping apparatus.

In carrying out the present invention, it is my purpose to provide a train stop whereby the propelling power of the motor car will be cut off and the brakes applied in the event of a car running by a danger signal.

It is also my purpose to improve and simplify the general construction of the track instruments of automatic train stopping devices and to provide a track instrument which will operate efficiently and effectively for its intended purpose and wherein the component parts will be so correlated and arranged as to reduce the possibility of derangement to a minimum.

With the above and other objects in view, the invention consists in the construction, combination and arrangement of parts hereinafter set forth in and falling within the scope of the claim.

In the accompanying drawings: Figure 1 is a fragmentary side elevation of a trackway and motor car thereon showing my invention installed. Fig. 2 is an enlarged cross sectional view through the trackway showing the track instrument. Fig. 3 is a sectional view on the line 3—3 of Fig. 2. Fig. 4 is a similar view on the line 4—4 of Fig. 2. Fig. 5 is a diagrammatic view of the car carried mechanism, parts being shown in section.

Referring now to the drawings in detail, 1 designates a trackway and 2 a motor car thereon. In the present instance, the motor car is in the form of a steam driven locomotive and located in the steam main leading from the steam space of the boiler to the engine cylinders is a cut off valve 3. Disposed adjacent to the cut off valve 3 is a cylinder 4 in which is mounted for reciprocation a piston 5 having the outer end of the piston rod 6 thereof connected with the stem of the valve 3.

7 designates the train line air pipe and leading from the train line air pipe to one end of the cylinder 4 is a branch pipe 8 in which is located a valve 9 equipped with a depending handle 10. When the valve 9 is actuated the air flows from the train line air pipe 7 into the cylinder 4 and actuates the piston 5 therein to close the valve 3 and so cut off communication between the boiler and the cylinders. The side wall of the cylinder 4 is preferably formed with a release port 11 adjacent to the end remote from that connected to the branch pipe 8 and when the piston 5 has been actuated to close the valve 3, such piston uncovers the port 11 so that the air in the brake pipe may discharge into the atmosphere, thereby effecting an application of the brakes to the wheels.

In accordance with my present invention, track instruments are arranged along the trackway and spaced apart and preferably disposed adjacent to the respective road signals. Each track instrument comprises a horizontal shaft 12 arranged transversely of the trackway and disposed below the lines of rails thereof and having one end journaled in a bearing 13 carried by the standard of the adjacent semaphore and the opposite end journaled in a bearing 14 carried by an adjacent rail tie. Fixed upon the shaft 12 at the outer sides of the lines of rails of the trackway are collars 15 and radiating from each collar 15 is an arm 16 having the outer end thereof outturned at right angles to the main body portion of the arm as at 17 and formed with a socket 18. Disposed within the socket 18 is the stem 19 of a Y-shaped trip arm 20 and threaded through the side wall of the socket is a set screw 21 engaging the stem 19 of the trip arm to hold the latter in proper position. Spanning the space between the limbs of the Y-shaped trip arm and secured to the outer ends thereof is a cross bar 22. Keyed upon the shaft 12 adjacent to the bearing 13 is a sprocket wheel 23 and engaging the sprocket wheel 23 is a vertically disposed chain 24. The upper end of the chain 24 is connected to the signal blade of the semaphore by means of a wire or cable 25 and, in the present instance, the lower end of the chain 24 is fastened to one end of a retractile spring 26, the remaining end of the latter being secured to an appropriate support.

In the present instance, the signal blade operates in the upper quadrant and when the signal blade of the semaphore gravitates to

danger position the wire 25 is released and the spring 26 reacts to draw the chain 24 downwardly and in the downward movement of the chain 24 under the action of the spring 26 the sprocket wheel 23 and shaft 12 are rotated and in this movement of the shaft the arms 20 are swung from horizontal or inactive position to vertical or active position. Should a train attempt to run by the danger signal the handle 10 of the valve 9 will contact with the cross bar 22 of the adjacent trip arm with the effect to open the valve 9 and so cut off the flow of steam to the cylinders and effect an application of the brakes. On the other hand, when the signal blade is actuated to clear position, the chain 24 is pulled upwardly under the action of the wire 25 against the action of the spring 26 and revolves the shaft 12 to throw the arms 20 to horizontal or inactive position so that the handle 10 of the valve 9 on a passing train will be uninfluenced by the trip arms.

It will be noted that in the event of the connection between the signal blade and the chain 24 breaking, the latter will be pulled downwardly under the action of the spring 26, thereby setting the track instrument to stop a passing train so that the engineer of such train may take steps to have the broken mechanism repaired.

I claim:

In train stopping apparatus, a horizontal shaft arranged transversely of the trackway below the lines of rails, bearings for said shaft, trip arms secured to said shaft at the outer sides of the lines of rails of the trackway and rotatable with the shaft from inactive to active position and vice versa, a sprocket wheel keyed upon said shaft and disposed in proximity to an adjacent road signal, a vertical chain meshing with the teeth of said sprocket wheel, a connection between the upper end of said chain and a signal blade of the adjacent road signal whereby the shaft will be rotated to swing the arm to inactive position in the movement of the signal blade to clear position, and a spring connected to the lower end of said chain and acting to rotate said shaft to swing said arms to active position in the movement of the blade to danger position.

In testimony whereof I affix my signature in presence of two witnesses.

WILLETS SHROPSHIRE.

Witnesses:

WALTER M. LOVE,

SAMUEL TOZAIN.

Copies of this patent may be obtained for five cents each, by addressing the "Commissioner of Patents, Washington, D. C."