Feb. 7, 1933. L. WALKER 1,896,989

BANK PROTECTOR

Filed March 8, 1932 2 Sheets-Sheet 1

Fig. 1.

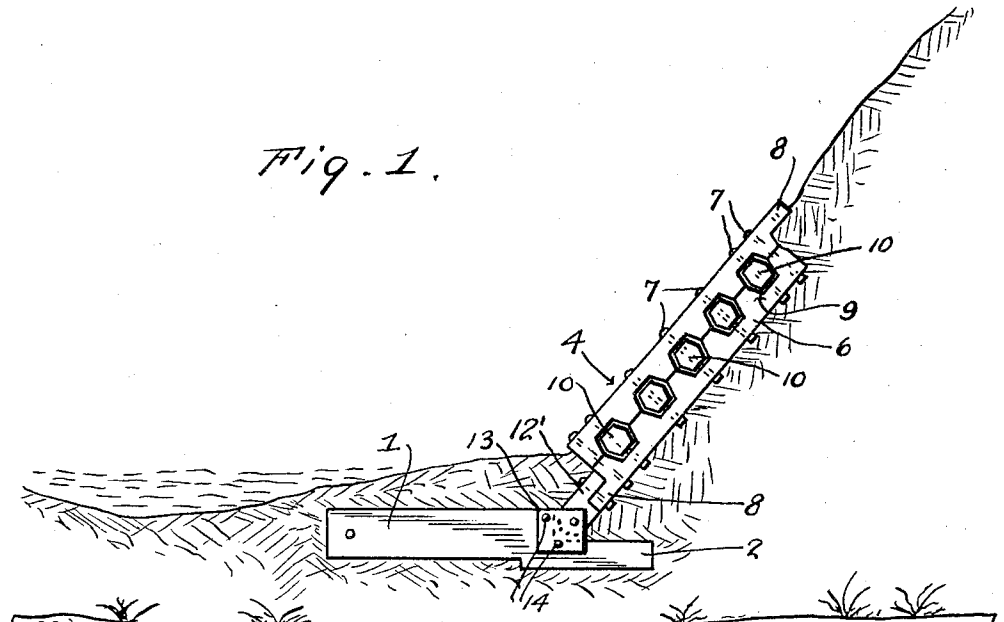

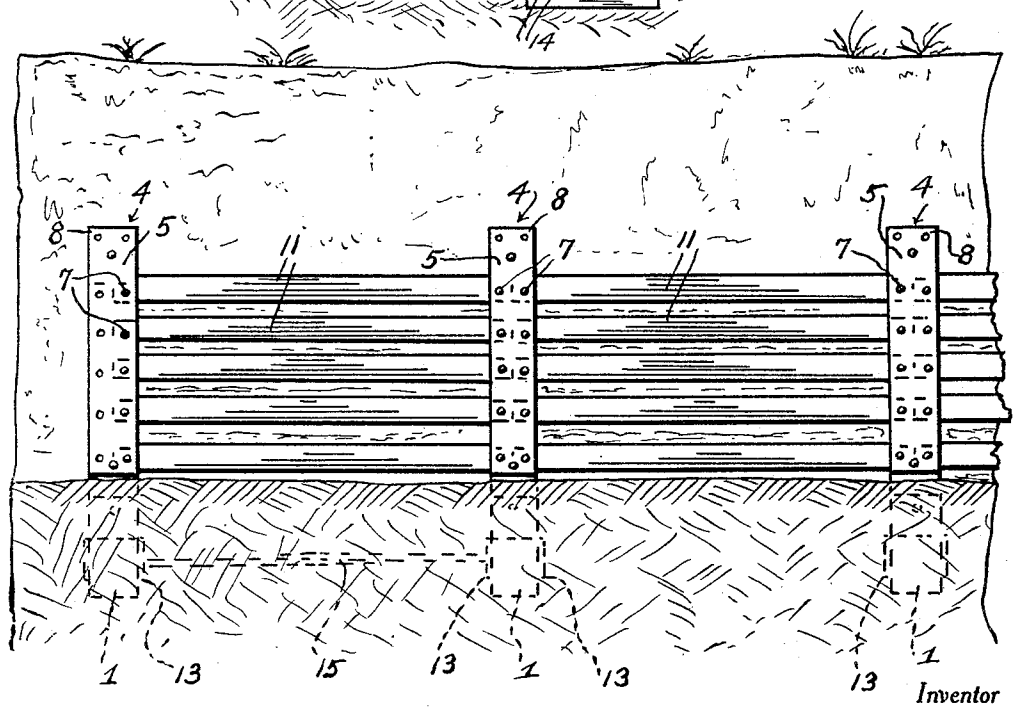

Fig. 2.

Inventor

Lee Walker

By Clarence A. O'Brien

Attorney

Feb. 7, 1933. L. WALKER 1,896,989

BANK PROTECTOR

Filed March 8, 1932 2 Sheets-Sheet 2

Fig. 3.

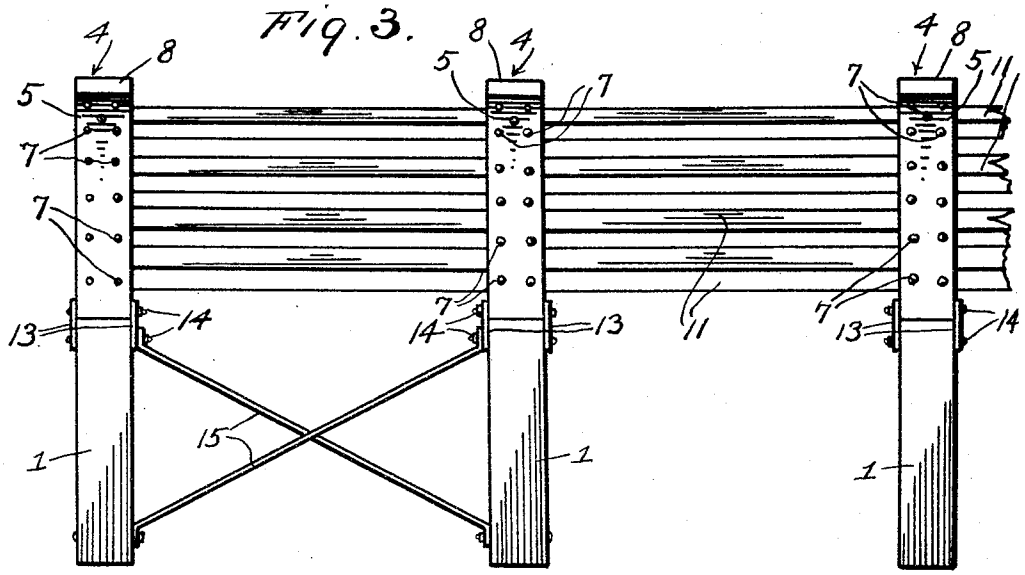

Fig. 4.

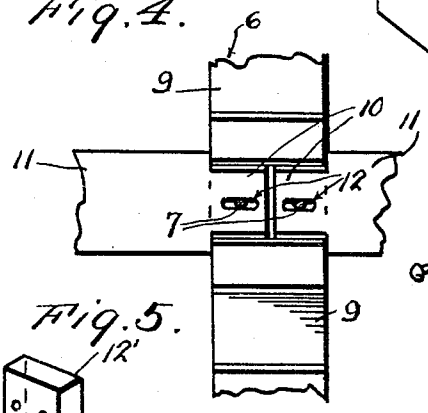

Fig. 8.

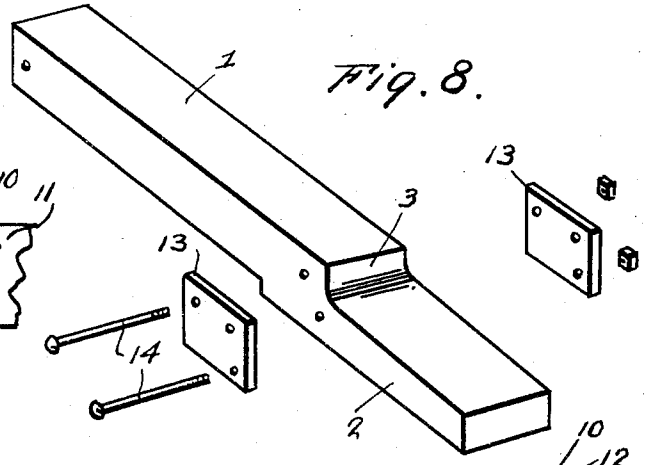

Fig. 5.

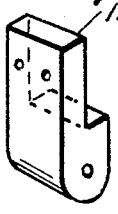

Fig. 7.

Fig. 6.

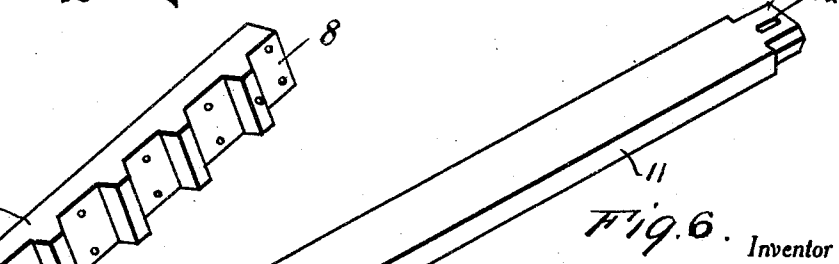

Inventor

Lee Walker

By Clarence A. O'Brien

Attorney

Patented Feb. 7, 1933

1,896,989

UNITED STATES PATENT OFFICE

LEE WALKER, OF NORTH HORNELL, NEW YORK

BANK PROTECTOR

Application filed March 8, 1932. Serial No. 597,584.

The present invention relates to new and useful improvements in bank protectors for use particularly along streams and on the wing walls of bridges and has for some of its objects to provide, in a manner as hereinafter set forth, a device of this character which will be simple in construction, strong, durable, highly efficient and reliable in use, and which may be manufactured, assembled and installed at low cost.

All of the foregoing and still further objects and advantages of the invention will become apparent from a study of the following specification, taken in connection with the accompanying drawings wherein like characters of reference designate corresponding parts throughout the several views, and wherein:—

Figure 1 is a view in end elevation of a structure in accordance with the present invention, showing the same in operative position.

Figure 2 is a view in front elevation thereof.

Figure 3 is a view in top plan of the structure.

Figure 4 is a detail view in top plan showing the joint between the rails and one of the cross members, the upper section of said cross member being removed.

Figure 5 is a detail view in perspective of one of the hinge members.

Figure 6 is a detail view in perspective of one of the rails.

Figure 7 is a detail view in perspective of one of the cross member sections.

Figure 8 is a detail view in perspective of one of the footings together with the hinge plates, bolts and nuts, the latter elements being shown separated.

Referring now to the drawings in detail, it will be seen that the embodiment of the invention which has been illustrated comprises a plurality of spaced footings 1 which are embedded transversely in the bed of the stream adjacent the bank, said footings including the reduced, downwardly offset end portions 2 providing the shoulders 3.

The reference numeral 4 designates generally a plurality of cross members each of which includes an upper section 5 and a lower section 6 and 6, respectively, said sections being substantially duplicate in construction and being rigidly secured together by the bolts 7. The opposite ends of the sections 5 and 6 are provided with the apertured extensions 8.

The opposed faces of the sections 5 and 6 are provided with the complemental transverse channels 9 having inclined side walls and providing, in conjunction with each other, substantially hexagonal openings for the reception of the substantially correspondingly shaped reduced end portions 10 of the rails 11. The end portions 10 of the rails 11 are smaller than the openings into which said end portions extend to provide loose joints. The end portions 10 are further provided with slots 12 through which bolts 7 pass for anchoring the rails to the cross members 4 in a manner to permit limited longitudinal movement of said rails.

The cross members 4 are pivotally connected to the footings 1 for swinging movement in a vertical plane through the medium of the hinge members 12′ which are bolted to the extensions 8 of the lower cross member sections 6. The hinge members 12′ are pivotally mounted between plates 13 secured to the vertical sides of the footings and extending adjacent the shoulders 3, by the nut equipped bolts 14.

It will thus be seen that a series of loosely connected sections has been provided and it is understood, of course, that any desired number of said sections may be assembled or connected. When the structure is installed in a particularly swift stream, crossed braces 15 may be provided between alternating pairs of the footings 1. Also, if desired, additional sections may be secured to the upper ends of the cross members 4 by connecting said additional sections to the extensions 8 on the upper ends of the upper cross member sections 5. As will be readily apparent, the rails 11 are mounted in spaced parallelism with each other. The footings, rails and cross members may be of any suitable material, such as concrete, and of any dimensions.

It is believed that the many advantages of a bank protector constructed in accordance with the present invention will be readily understood by those skilled in the art to which the invention pertains, and although the preferred embodiment of the invention is as illustrated and described, it is to be understood that changes in the details of construction and in the combination and arrangement of parts may be resorted to which will fall within the scope of the invention as claimed.

What is claimed is:—

1. A bank protector comprising footings to be embedded in the bed of a stream, said footings including downwardly offset end portions providing shoulders, plates secured on the vertical sides of the footings and extending adjacent the shoulders, cross members for mounting on the bank, rails extending between the cross members and secured thereto, and hinges pivotally mounted between the plates and secured to the cross members for connecting the footings to said cross members for swinging movement.

2. A bank protector comprising footings, cross members pivotally connected to the footings, said cross members each including upper and lower sections secured together and having complemental channels in their opposed sides defining, in conjunction with each other, transverse openings, and rails extending between the cross members and having their end portions engaged in the openings.

3. A bank protector comprising footings, cross members hingedly connected to the footings, each cross member including substantially duplicate upper and lower sections rigidly secured together and having complemental channels in their opposed sides defining, in conjunction with each other, polygonal openings extending transversely through said cross members, and spaced, parallel rails extending between the cross members and comprising reduced end portions engaged in the openings and secured to the cross members.

4. A bank protector comprising footings, cross members hingedly connected to the footings and having transverse openings therein, and rails extending between the cross members and having their end portions engaged in the openings and secured therein, the end portions of the rails being smaller than the openings.

5. A bank protector comprising cross members having transverse openings therein, rails extending between the cross members, and reduced end portions on the rails engaged in the openings, the end portions of the rails being substantially hexagonal in cross section and further being smaller than the openings.

6. A bank protector comprising cross members having transverse openings therein, rails extending between the cross members, reduced end portions on the rails engaged in the openings, said end portions having slots extending longitudinally therein, and bolts extending through the cross members and through the slots for anchoring the rails to said cross members.

7. A bank protector comprising spaced cross members, said cross members including upper and lower substantially duplicate sections having complemental channels in their opposed sides defining, in conjunction with each other, polygonal openings extending transversely through the cross members, spaced, parallel rails extending between the cross members, reduced end portions on the rails of polygonal cross section and engaged in the openings, said end portions being smaller than the openings and having longitudinal slots therein, and bolts extending through the sections for rigidly securing said sections together, said bolts passing through the slots for anchoring the rails to the cross members.

In testimony whereof I affix my signature.

LEE WALKER.