(No Model.) 2 Sheets—Sheet 1.

W. BRATBY & J. CHADWICK.

TURN-OVER FILLING MACHINE.

No. 343,001. Patented June 1, 1886.

FIG. 1.

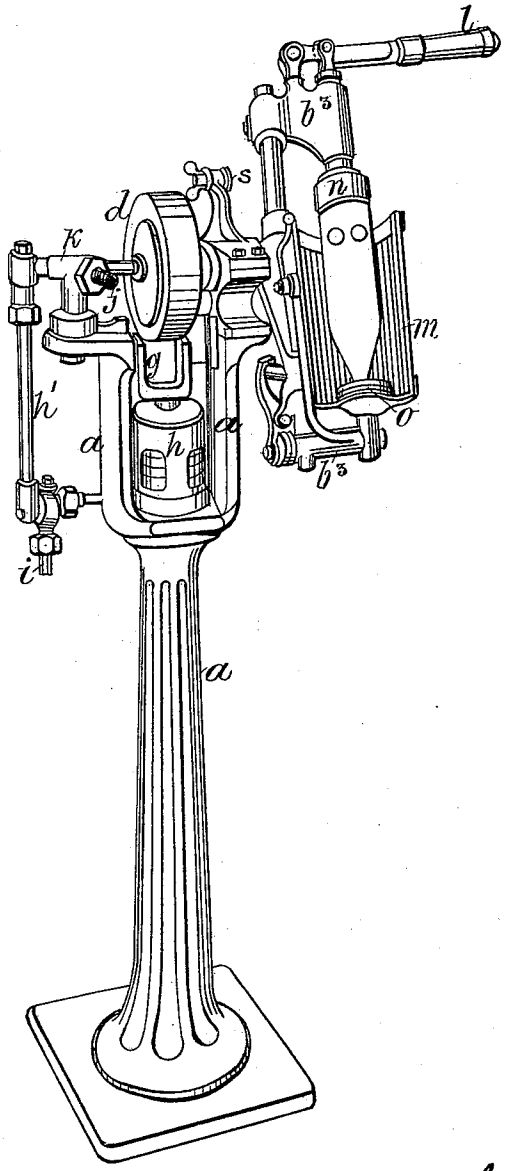

Witnesses:
W. Reed Haight
J. W. Reynolds

Inventors
William Bratby
John Chadwick
by Wm. H. Babcock
Attorney

N. PETERS. Photo-Lithographer, Washington, D. C.

(No Model.) 2 Sheets—Sheet 2.

W. BRATBY & J. CHADWICK.

TURN-OVER FILLING MACHINE.

No. 343,001. Patented June 1, 1886.

FIG. 2.

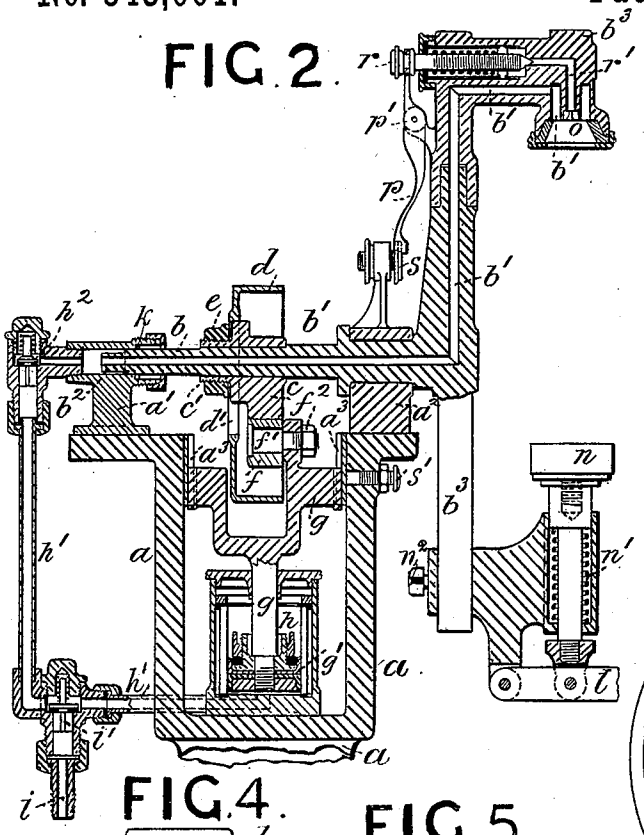

FIG. 2a.

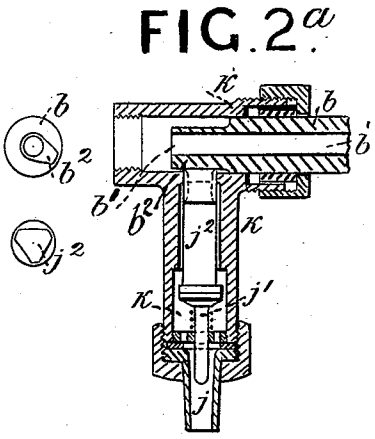

FIG. 3.

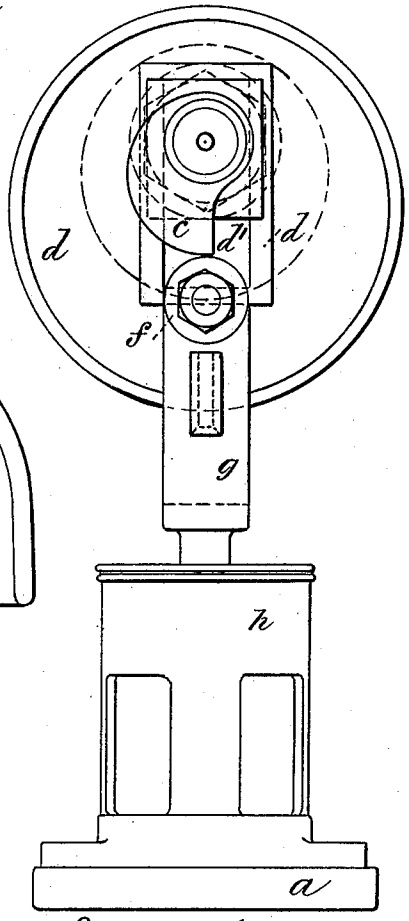

FIG. 4.

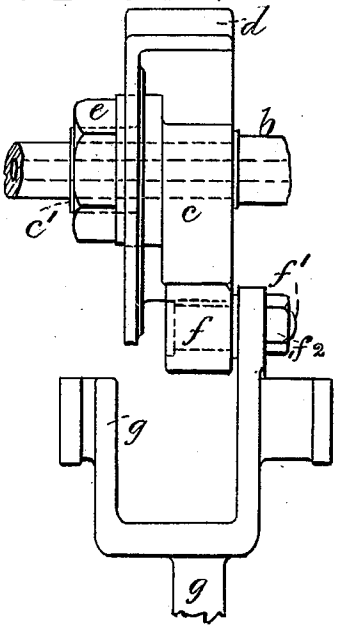

FIG. 5.

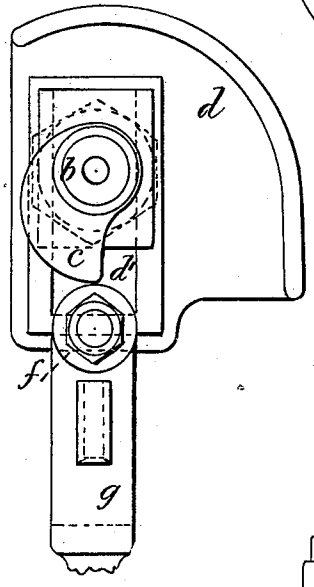

Witnesses:
W. Keen Haight
J. M. Reynolds

Inventors:
William Bratby
John Chadwick
by Wm. H. Babcock
Attorney

N. PETERS, Photo-Lithographer, Washington, D. C.

UNITED STATES PATENT OFFICE.

WILLIAM BRATBY AND JOHN CHADWICK, OF MANCHESTER, COUNTY OF LANCASTER, ENGLAND.

TURNOVER FILLING-MACHINE.

SPECIFICATION forming part of Letters Patent No. 343,001, dated June 1, 1886.

Application filed March 4, 1886. Serial No. 194,013. (No model.)

To all whom it may concern:

Be it known that we, WILLIAM BRATBY and JOHN CHADWICK, both subjects of the Queen of Great Britain, residing at Manchester, in the county of Lancaster, England, have invented a new and useful Turnover Filling-Machine, of which the following is a specification.

Our invention relates to improvements in what are known as "turnover filling-machines" or machines for forcing sirups and aerated liquids or aerated liquids alone into internally-stoppered bottles, the chief object of our improvements being to cause the pump to be completely emptied of all sirup or other liquid at every stroke of the piston. We attain this object by the mechanism illustrated in the accompanying drawings, in which—

Figure 1 is a view in perspective of the entire machine to which our invention is applied. Fig. 2 is a vertical section through the upper part of the machine, showing the sirup-pump and piston with our improved mechanism for operating the same; also, the hollow shaft and bottle-holder. Fig. 2^a are detailed views of the valve and cam for regulating the admission of the aerated liquid. Fig. 3 is a side elevation of the sirup-pump and cams for operating the same, and Figs. 4 and 5 are detailed views of an alternative arrangement which we employ for actuating the piston of the sirup-pump.

Similar letters refer to similar parts throughout the several views.

In these views, *a* is the frame of the machine; *b*, the ordinary hollow shaft, which is provided with the central passage, *b'*, and is supported and free to revolve in suitable bearings, *a' a²*, on the frame *a*.

c is the small solid cam, which is fixed upon the hollow shaft *b*, and *d* is the hollow cam, which is slotted at *d'* and mounted adjustably upon the boss *c'* of the small cam *c*, the cam *d* being secured to the cam *c* by means of the nut *e*, which screws upon the boss *c'*. The hollow cam *d* may either be in the form of a flanged disk-wheel, as shown in Figs. 2 and 3, or in the form of a flanged segment, as shown in Figs. 4 and 5.

f is the anti-friction bowl, mounted on a stud, *f'*, secured by a nut, *f²*, to one arm of the forked piston-rod *g*, which is secured to the piston *g'*, and is guided in slides *a³*, secured to the frame.

h is the barrel of the stationary sirup-pump, which is fixed upon the frame *a* and to which is connected one end of the pipe *h'*, the other end of which is in communication with the central passage, *b'*, of the hollow shaft *b* through a back-pressure valve, *h²*.

i is the sirup-supply pipe, connected to the lower end of the pipe *h'* and fitted with a back-pressure valve, *i'*, through which sirup is drawn into the barrel *h*.

j is the aerated water-supply pipe, (see Fig. 2^a,) connected, as usual, to the central passage, *b'*, in the hollow shaft *b* by a stuffing-box, *k*, and controlled by a valve, *j'*, which is fitted in an arm of the stuffing box *k*, and is kept normally closed by a spring. The stem j^2 of the valve projects slightly into the stuffing-box *k*, and there is a small cam, b^2, formed or secured on the end of the hollow shaft *b*, which works in the stuffing-box *k*, so that as the shaft *b* is turned the cam b^2 opens and keeps open the valve *j'* during a portion of the revolution of the shaft *b*.

l is the ordinary lever or handle by which the arm b^3 of the shaft *b*, the said shaft *b*, and guard *m* are revolved.

n is the cup which receives the base, and *o* the socket which receives the mouth, of the bottle to be filled. The cup *n* is secured to the arm b^3 by a set-screw, n^2, but the socket *o* is made in one piece with the arm b^3, and is in communication with the passage *b'*, through which sirup and aerated water are supplied to the bottle. The lever *p* is pivoted at *p'* and connected at one end to the spindle *r* of the "snift-valve," so that when the free end of the pivoted lever *p* comes in contact with one or other of the adjustable stop-pieces *s s'* the spindle *r* is operated to open the snift-valve and passage *r'*, and allow compressed air to escape from the bottle or air and water from the passage *b'*.

The operation of the machine is as follows: The lever *l* is slightly raised when in the position shown in Fig. 1, and the cup *n* drawn back to receive the bottom of the bottle, the

month of which is then placed in the socket *o* and pressed tightly against the india-rubber or other washer in said socket by the action of the spiral spring *n'* on the cup *n*. The shaft *b*, arm b^3, and guard *m*, with the bottle, are then all rotated by means of the handle *l*, and as the shaft *b* turns round the small cam *c* depresses the anti-friction bowl *f* and piston *g'*, and so forces sirup through the pipe *h'*, valve h^2, and passage *b'* into the bottle until the piston *g'* reaches the bottom of the pump-barrel *h*, as shown in Fig. 2. When the instroke of the piston *g* is completed, the cam *c* leaves the bowl *f*, the back-pressure valve h^2 closes, and as the rotation of the shaft *b* is continued the cam b^2 comes against the end of the stem j^2, and so opens the valve *j'* and admits aerated liquid from the supply-pipe *j* through the valve *j'*, and passage *b'* into the bottle, which, when partly filled, is "snifted" by the free end of the pivoted lever *p* coming against the stop *s*, thus moving the lever *p* and opening the passage *r'* to permit the escape of the compressed air and allow the bottle to be completely filled with aerated liquid. During that portion of the revolution of the shaft *b* when the cam b^2 is keeping open the valve *j'* no motion is imparted to the piston *g'*; but when the cam b^2 passes beyond the end of the stem j^2 and the valve *j'* closes the flange of the hollow cam *d* comes under the bowl *f*, and so raises the bowl and the piston *g'*, thereby drawing a fresh charge of sirup from the pipe *i* into the pump-barrel *h* through the valve *i'* and pipe *h'*. If the bottle has not been quite filled during one stroke of the machine, the shaft *b* may be turned back to cause the cam b^2 to again open the valve *j'* and admit more aerated water. During this operation neither the solid cam *c* nor the hollow cam *d* comes in contact with the bowl *f*, and therefore the turning back is effected without imparting any motion to the sirup-pump. The filled bottle is then removed and a fresh bottle placed in position, and at the commencement of the next stroke of the machine the passage *r'* is again opened by the end of the lever *p* coming against the stop *s'*, thus permitting the air and water accumulated during the previous stroke to escape from the passage *r'*. By slackening the nut *e* and adjusting the position of the hollow cam *d* on the shaft *b* by means of the slot *d'*, which is graduated for the purpose, the cam *d* can be set so as to regulate the amount of sirup delivered at each stroke by giving more or less lift to the piston *g'*; or the cam *d* may be so set as to impart no motion at all to the sirup-pump when not required—as, for instance, when bottling soda-water alone.

Having stated the nature of our invention and described the manner of performing the same, we declare that what we claim, and desire to secure by Letters Patent of the United States, is—

1. In a turnover filling-machine, the combination, with the hollow revoluble shaft *b*, the cam *c*, and the hollow adjustable cam *d*, of the bowl *f*, piston-rod *g*, and piston *g'*, all substantially as herein set forth.

2. In a turnover filling-machine, the combination, with the hollow revoluble shaft *b*, of the cam *c* and the hollow adjustable cam *d*, as described and as illustrated.

3. In a turnover filling-machine, the hollow adjustable cam *d* and the shaft on which it is mounted, in combination with the piston of the sirup-pump, which is lifted thereby, and the cam *c*, for giving the reverse stroke to said piston, substantially as set forth.

The foregoing specification of our new and useful turn-over filling-machine signed by us this 18th day of February, 1886.

WILLIAM BRATBY.
JOHN CHADWICK.

Witnesses:
H. B. BARLOW,
S. W. GILLETT,
Both of 17 *St. Ann's Square, Manchester.*