US 20200086449A1

(19) United States

(12) Patent Application Publication (10) Pub. No.: US 2020/0086449 A1

Yao (43) Pub. Date: Mar. 19, 2020

(54) A PROCESSING APPARATUS FOR ELLIPTICAL ANNULAR OPTICAL GLASS

(71) Applicant: **Jianhua Yao**, Foshan City (CN)

(72) Inventor: **Jianhua Yao**, Foshan City (CN)

(21) Appl. No.: **16/687,637**

(22) Filed: **Nov. 18, 2019**

(30) **Foreign Application Priority Data**

Aug. 1, 2019 (CN) 2019107077416

Publication Classification

(51) **Int. Cl.**
B24B 13/00 (2006.01)

(52) **U.S. Cl.**
CPC ***B24B 13/0037*** (2013.01)

(57) **ABSTRACT**

The invention discloses a processing apparatus for elliptical annular optical glass, including a processing box, wherein the processing box is provided with a processing chamber with an opening forward, a sliding block is slidably mounted in the processing chamber, and the second motor passes through the power rod The disc is driven to rotate forward, and the disc drives the scriber to rotate through the connecting block. After the scribing mechanism completes the scribing of the glass, the sliding block moves downward through the first motor, and the sliding block moves downward to remove the excess glass. No manual operation is required, and the manual operation of the broken glass is avoided. The polishing block in the polishing mechanism polishes the glass to ensure that the glass is not scratched when the glass is manually removed, and is slid when the glass is large.

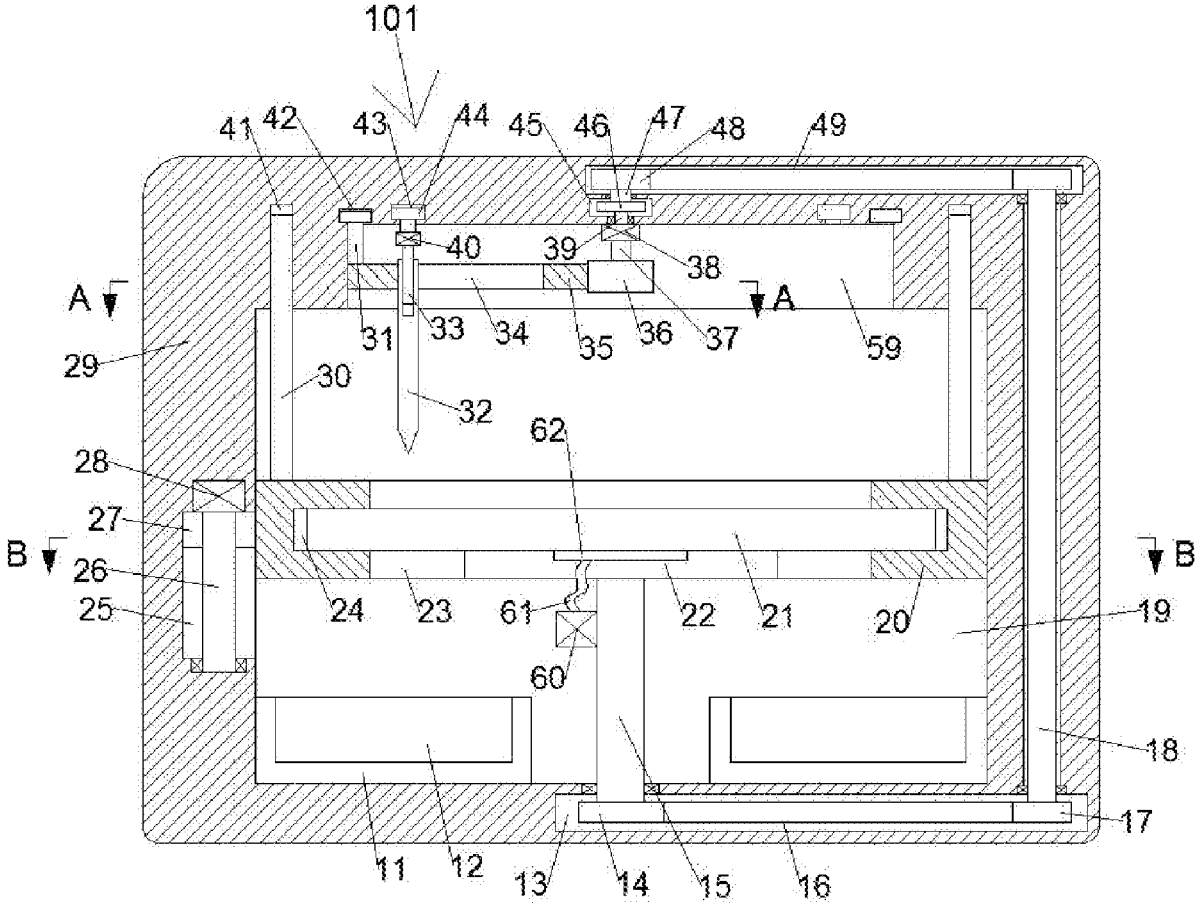

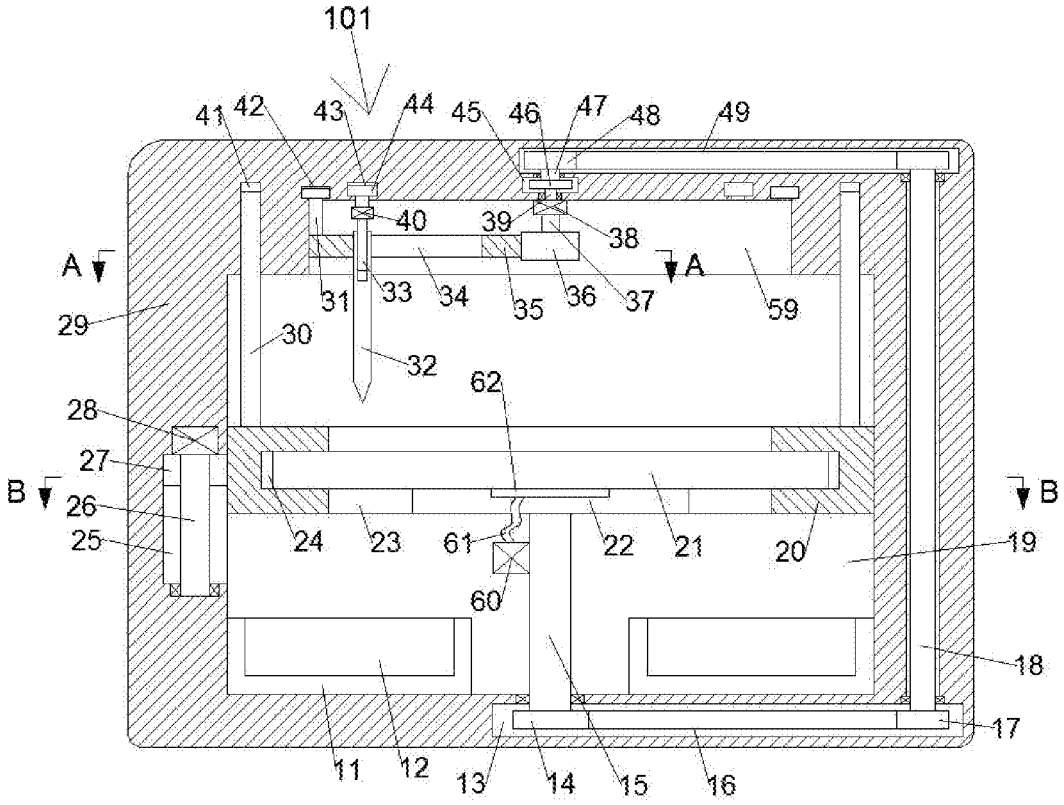
101
41
42
43
44
45
46
47
48
49
40
39
38
A
A
31
33
34
35
36
37
59
29
30
32
62
28
27
B
B
26
25
24
23
61
22
21
20
19
60
18
17
11
12
13
14
15
16

FIG 1

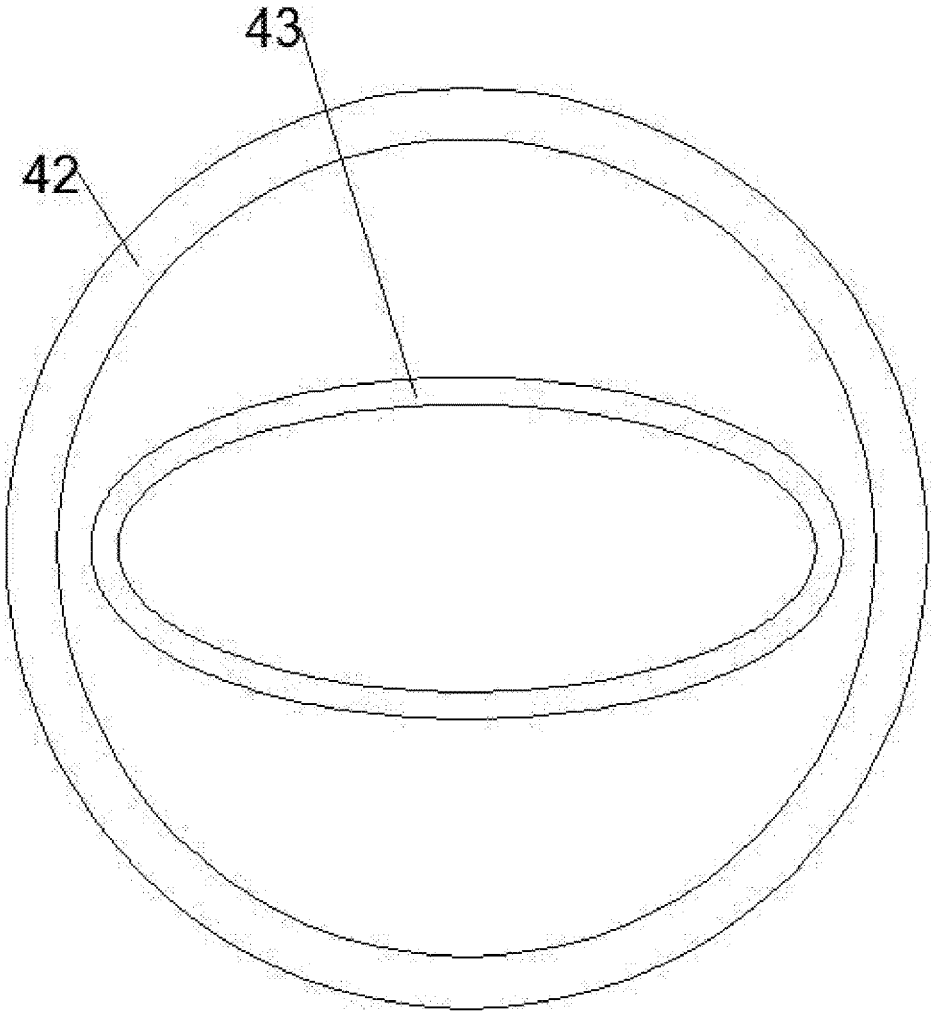

FIG 2

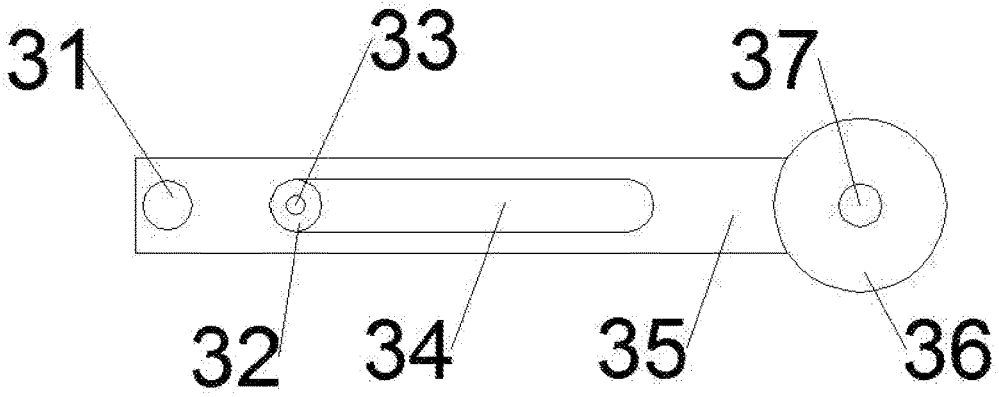

FIG 3

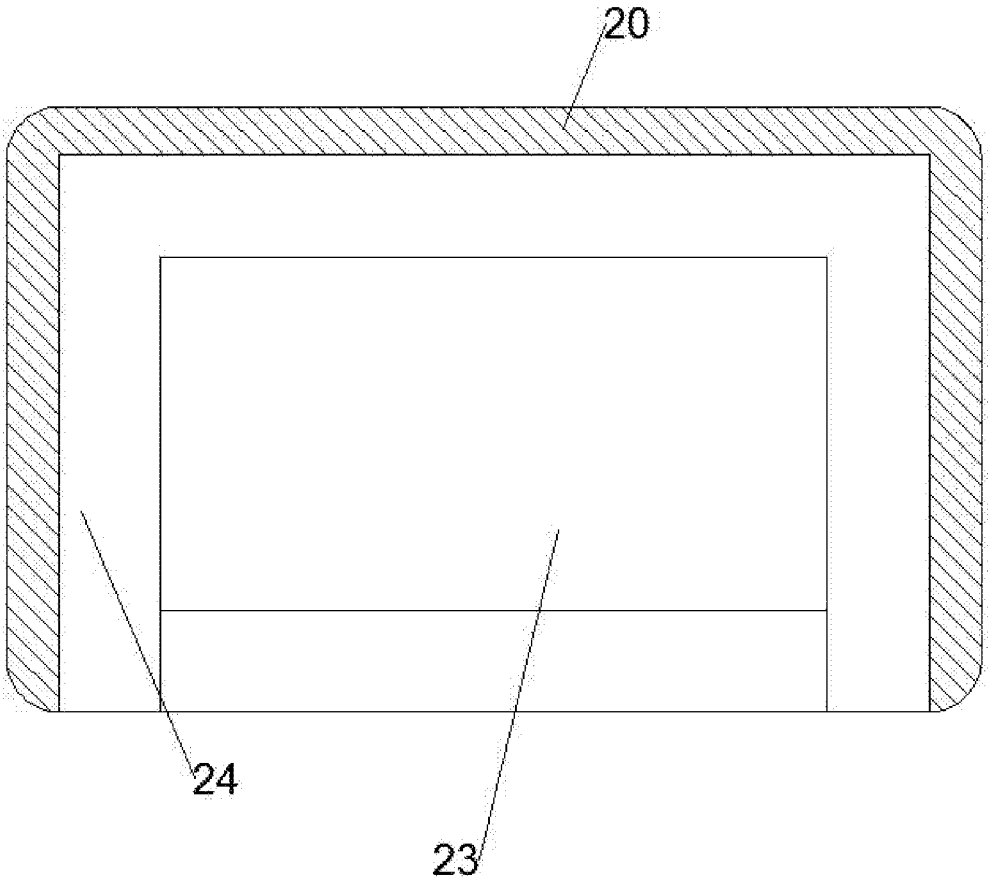

FIG 4

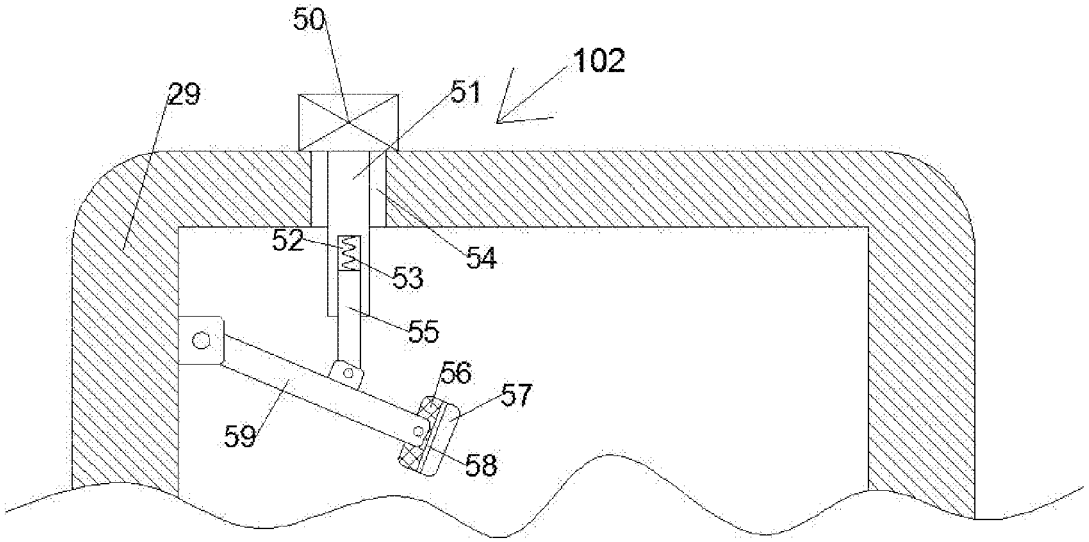

FIG 5

A PROCESSING APPARATUS FOR ELLIPTICAL ANNULAR OPTICAL GLASS

CROSS-REFERENCES TO RELATED APPLICATIONS

[0001] The present application claims priority from Chinese application No. 2019107077416 filed on Aug. 1, 2019 which is hereby incorporated by reference in its entirety.

TECHNICAL FIELD

[0002] The invention relates to the technical field of glass processing, in particular to a processing apparatus for elliptical annular optical glass.

BACKGROUND OF THE INVENTION

[0003] In the processing of glass, according to different needs, the glass needs to be processed into different shapes. Generally, the glass is processed into various shapes by scribing the glass, and after the scribing is completed, the excess glass needs to be manually removed. In the process of removing excess glass, there may be slight damage to the artificial glass caused by splashing glass, or scratching the glass by hand. In addition, when the glass to be processed is large, it is difficult to manually remove the excess glass.

CONTENT OF THE INVENTION

[0004] It is an object of the present invention to provide a processing apparatus for elliptical annular optical glass for overcoming the above-discussed deficiencies in the prior art.

[0005] A processing apparatus for an elliptical annular optical glass according to an embodiment of the present invention includes a processing box having a processing chamber with an opening forward, a sliding sliding block mounted in the processing chamber, the sliding a through hole is arranged in the block, the through hole is connected to a cavity, the cavity extends forwardly through the front side of the sliding block, the glass can be placed in the cavity, and the left inner wall of the processing cavity is connected a threaded cavity, the top wall of the threaded cavity is fixedly mounted with a first motor, and a bottom surface of the output shaft of the first motor is fixedly mounted with a threaded rod, and the threaded rod extends downward to a bottom wall of the threaded cavity, a screw block is slidably mounted in the threaded cavity, and the thread block is screwed to the threaded rod, and the right side of the thread block is fixedly mounted on the left side of the sliding block, and the top surface of the sliding block is symmetrically fixed to the fixed block. The top wall of the processing chamber is symmetrically connected to the left and right sides, and the fixed cavity is slidably mounted. The top wall of the processing chamber is connected with a motor cavity hinge rod, and the motor cavity hinge rod is disposed. Can enter the glass a scribing line mechanism, after the scribing mechanism is finished, the first motor starts to rotate the threaded rod, so that the thread block drives the sliding block to move downward, and the sliding block will be redundant The glass is removed, and the processing chamber is provided on the back side of the glass with a grinding mechanism that can polish the glass.

[0006] Based on the above technical solution, the bottom wall of the processing chamber is symmetrically placed with a collecting box, and the collecting box is provided with an opening chamber with an opening upward.

[0007] On the basis of the above technical solution, the bottom wall of the processing chamber is rotated to install a rotating rod, and the top surface of the rotating rod is fixedly mounted with a turntable.

[0008] Based on the above technical solution, the scribing mechanism includes a second motor fixedly mounted on the top wall of the hinge of the motor cavity, and the output shaft of the second motor is fixedly mounted with a power rod, and the bottom surface of the power rod is fixedly mounted with a disc. The connecting block is fixedly mounted on the disc, the connecting block is provided with a connecting cavity, the top surface of the connecting block is fixedly mounted with a moving block, and the top wall of the connecting rod of the motor cavity is connected with an annular cavity, and the annular cavity is The moving block is slidably mounted, and the scribe is slidably mounted in the connecting cavity.

[0009] On the basis of the above technical solution, the top wall of the articulated rod of the motor cavity is connected with an elliptical cavity, and the limiting block is slidably mounted in the elliptical cavity, and the third motor is fixedly mounted on the bottom surface of the limiting block, the third motor The downward output shaft is fixedly mounted with a fixing rod that is threadedly mounted to the scribe.

[0010] Based on the above technical solution, the air pump is fixedly mounted on the rotating rod, and the suction cup is fixedly mounted in the top surface of the rotating plate, and the connecting tube is fixedly installed between the suction cup and the air pump.

[0011] On the basis of the above technical solution, a transmission cavity is symmetrically arranged in the upper and lower sides of the processing box, and the rotating rod extends downwardly through the top wall of the transmission cavity of the lower side, and a ratchet cavity is arranged above the hinged rod of the motor cavity, a top surface of the output shaft of the second motor is fixedly mounted with a short rod extending upwardly through the bottom wall of the ratchet cavity, the top surface of the short rod fixedly mounting a ratchet, the ratchet cavity and the upper side Rotating a transmission rod between the transmission chambers, the transmission rod is fixedly connected with the ratchet wheel, the top surface of the transmission rod is fixedly mounted with a first gear, and the bottom surface of the rotating rod is fixedly mounted with a second gear, and the transmissions on the upper and lower sides are Rotating a long rod between the cavities, the long rod is fixedly mounted on the upper and lower symmetry to fix the third gear, and the first chain is driven between the second gear and the third gear on the lower side, the first gear and the upper side A second chain is mounted between the third gears.

[0012] In the above technical solution, the sanding mechanism includes a hydraulic rod hole that communicates with an inner wall of the rear side of the processing chamber, and a hydraulic pump is fixedly mounted on a rear side of the processing box, and a front side of the forward output shaft of the hydraulic pump Fixing a hydraulic rod, the hydraulic rod passes through the hydraulic rod hole, a spring chamber is disposed in the hydraulic rod, a sliding rod is slidably mounted in the spring chamber, and a rear side of the sliding rod and a rear side of the spring chamber A spring is fixedly mounted between the inner walls, and a left side inner wall of the machining chamber is hingedly mounted with a motor

cavity hinge rod, and the motor cavity hinge rod is hingedly mounted with the sliding rod, and the hinge joint of the motor cavity is hingedly mounted with an hinge block, and the hinge A grinding chamber is arranged in the block, and the grinding block is fixedly mounted in the grinding chamber.

[0013] The invention has the beneficial effects that: after the scribing mechanism completes the scribing of the glass, the sliding block moves downward by the first motor, and the sliding block moves downward to remove the excess glass, without manual manual operation, thereby avoiding The smashed glass scratches the artificial situation, and the polishing block in the grinding mechanism polishes the glass to ensure that the glass is not scratched when the glass is manually removed, and when the glass is large, the excess glass is moved downward by the sliding block. It is easier to remove and worth promoting.

BRIEF DESCRIPTION OF THE DRAWINGS

[0014] FIG. **1** is a schematic view of the structure of the present invention;

[0015] FIG. **2** is a bottom view of the annular cavity and the elliptical cavity of the present invention;

[0016] FIG. **3** is a cross-sectional structural view of the first embodiment of the present invention taken along A-A direction;

[0017] FIG. **4** is a top plan view showing the sliding block of the present invention;

[0018] FIG. **5** is a cross-sectional structural view showing the direction B-B of FIG. **1** of the present invention.

DETAILED DESCRIPTION OF THE INVENTION

[0019] The present invention will now be described in detail with reference to FIGS. **1-5**. For the convenience of description, the orientations described below are now defined as follows: the up, down, left, and right front and rear directions described below are consistent with the up, down, left, and right front and rear directions of the projection relationship of FIG. **1** itself.

[0020] Referring to FIGS. **1-5**, a processing apparatus for elliptical annular optical glass according to an embodiment of the present invention includes a processing box **29** having an open processing chamber **19** therein, the processing chamber The sliding block **20** is slidably mounted in the sliding block **20**, and the through hole **23** is disposed in the sliding block **20**, and the through hole **23** is communicated with a cavity **24** extending forwardly through the front side of the sliding block **20**. The glass chamber **21** can be placed in the cavity **24**, and the inner wall of the left side of the processing chamber **19** is connected with a threaded cavity **25**, and the top wall of the threaded cavity **25** is fixedly mounted with the first motor **28**, and the output shaft of the first motor **28** is downward. The bottom surface is fixedly mounted with a threaded rod **26** extending downwardly to the bottom wall of the threaded cavity **25**, the threaded cavity **25** is slidably mounted with a threaded block **27**, and the threaded block **27** is threaded with the threaded rod **26** The right side of the thread block **27** is fixedly mounted on the left side of the sliding block **20**, and the top surface of the sliding block **20** is fixedly fixed to the left and right sides. The top wall of the processing chamber **19** is symmetrically connected with a fixed cavity **41**. The fixing cavity **41** is slidably mounted with the fixing block **30**, and the top wall of the processing cavity **19** is connected. There is a motor cavity hinge rod **59**. The motor cavity hinge rod **59** is provided with a scribing mechanism **101** for scribing the glass **21**. After the scribing mechanism **101** is finished, the first motor **28** is activated. The threaded rod **26** is driven to rotate, so that the thread block **27** drives the sliding block **20** to move downward, the sliding block **20** removes excess glass, and the processing chamber **19** is disposed on the rear side of the glass **21** A sanding mechanism **102** that can polish the glass **21** can be used.

[0021] In addition, in one embodiment, the bottom wall of the processing chamber **19** is symmetrically placed with a collecting box **11**, and the collecting box **11** is provided with an opening chamber **12** with an opening upward, and the excess glass removed by the sliding block **20** is dropped. It falls within the collection chamber **12**.

[0022] In addition, in one embodiment, the bottom wall of the processing chamber **19** is rotatably mounted with a rotating rod **15**, and the top surface of the rotating rod **15** is fixedly mounted with a turntable **22** for supporting the glass **21**.

[0023] In addition, in one embodiment, the scribing mechanism **101** includes a motor wall hinge rod **59** fixedly mounted with a second motor **38**, and a downward output shaft of the second motor **38** fixedly mounts a power rod **37**, the power rod The bottom surface is fixedly mounted with a disc **36**. The disc **36** is fixedly mounted with a connecting block **35**. The connecting block **35** is provided with a connecting cavity **34**. The top surface of the connecting block **35** is fixedly mounted with a moving block **31**, and the motor cavity is hinged. The top wall of the rod **59** is communicated with an annular cavity **42**. The annular cavity **42** is slidably mounted with the moving block **31**. The connecting cavity **34** is slidably mounted with a scriber **32**. When the second motor **38** is activated, the The second motor **38** drives the disc **36** to rotate forward by the power rod **37**. The disc **36** drives the scriber **32** to rotate through the connecting block **35**. The scriber **32** faces the glass **21** Dash.

[0024] In addition, in an embodiment, the top wall of the motor cavity hinge rod **59** communicates with an elliptical cavity **43**. The elliptical cavity **43** is slidably mounted with a limiting block **44**, and the bottom surface of the limiting block **44** is fixedly mounted with a third motor. **40**. The output shaft of the third motor **40** is fixedly mounted with a fixing rod **33**. The fixing rod **33** is screwed to the scriber **32**. When the glass **21** is scribed, the third motor **40** starts. The fixing rod **33** is rotated to move the scriber **32** downward, and the scriber **32** abuts against the glass **21**.

[0025] In addition, in one embodiment, the rotating rod **15** is fixedly mounted with an air pump **60**. The top surface of the rotating plate **22** is fixedly mounted with a suction cup **62**. The suction cup **62** and the air pump **60** are fixedly mounted with a connecting pipe **61**. When the glass **21** is placed on the turntable **22**, the air pump **60** is activated, and the air pump **60** sucks the glass **21** through the connecting pipe **61** and the suction cup **62**.

[0026] In addition, in one embodiment, the processing chamber **29** is vertically symmetrically disposed with a transmission cavity **13** extending downwardly through the top wall of the transmission cavity **13** of the lower side, above the motor cavity hinge rod **59** a ratchet cavity **45** is provided, and the top surface of the output shaft of the second motor **38** is fixedly mounted with a short rod **39**

extending upwardly through the bottom wall of the ratchet cavity **45**, and the top surface of the short rod **39** is fixedly mounted a ratchet **46**, the ratchet cavity **45** and the upper transmission cavity **13** are rotatably mounted with a transmission rod **47**, the transmission rod **47** is fixedly connected with the ratchet **46**, and the top surface of the transmission rod **47** is fixedly mounted with the first gear **48**. The second gear **14** is fixedly mounted on the bottom surface of the rotating rod **15**, and the long rod **18** is rotatably mounted between the upper and lower sides of the transmission cavity **13**. The long rod **18** is vertically symmetrically fixedly mounted with the third gear **17**, the second A first chain **16** is driven between the gear **14** and the third gear **17** on the lower side, and the second chain **49** is driven between the first gear **48** and the third gear **17** on the upper side when the sliding After the block **20** moves downward, the second motor **38** drives the short rod **39** to reverse, so that the The rod **39** drives the first gear **48** to rotate by the ratchet **46**, the first gear **48** passes through the second chain **49**, the third gear **17**, the long rod **18**, the first chain **16** and The second gear **14** drives the rotating rod **15** to rotate, so that the rotating wheel **22** drives the glass **21** to rotate, and the short rod **39** rotates forward through the ratchet **46** without rotating the transmission rod **47**.

[0027] In addition, in one embodiment, the sanding mechanism **102** includes a hydraulic rod hole **54** that communicates with an inner wall of the rear side of the processing chamber **19**, and a hydraulic pump **50** is fixedly mounted on the rear side of the processing box **29**, the hydraulic pump **50** The front side of the front output shaft is fixedly mounted with a hydraulic rod **51**. The hydraulic rod **51** passes through the hydraulic rod hole **54**. The hydraulic rod **51** is provided with a spring chamber **52**. The spring chamber **52** is slidably mounted with a sliding rod **55**. a mounting spring **53** is fixedly disposed between the rear side of the sliding rod **55** and the inner wall of the rear side of the spring chamber **52**. The left inner wall of the machining chamber **19** is hingedly mounted with a motor cavity hinge rod **59**, and the motor chamber hinge rod **59** is The sliding rod **55** is hingedly mounted, and the motor cavity hinge rod **59** is hingedly mounted with a hinge block **56**. The hinge block **56** is provided with a grinding chamber **57**. The grinding chamber **57** is fixedly mounted with a sanding block **58** when the sliding block **20** is After moving downward, the hydraulic pump **50** is activated, and the hydraulic pump **50** causes the sliding rod **55** to move forward by the hydraulic rod **51**, so that the sanding block **58** is in contact with the side surface of the glass **21**, The sanding block **58** sands the side of the glass **21**.

[0028] When the glass **21** is processed, the glass **21** is placed on the turntable **22**, the air pump **60** is activated, and the air pump **60** sucks the glass **21** through the connecting pipe **61** and the suction cup **62**. When the glass **21** is scribed, the third motor **40** starts to drive the fixed rod **33** rotates, causing the scriber **32** to move downward, and the scriber **32** abuts against the glass **21**. When the second motor **38** is activated, the second motor **38** drives the disk **36** to rotate forward through the power rod **37**, and the disk **36** passes through the connecting block. **35** drives the scriber **32** to rotate, and the scriber **32** scribes the glass **21**. After the scribe line is completed, the first motor **28** starts to rotate the threaded rod **26**, so that the thread block **27** drives the sliding block **20** to move downward, and the sliding block **20** The excess glass is removed. When the sliding block **20** moves downward, the second motor **38** drives the short rod **39** to reverse, so that the short rod **39** drives the first gear **48** to rotate through the ratchet **46**. The first gear **48** passes through the second chain **49**. The third gear **17**, the long rod **18**, the first chain **16** and the second gear **14** drive the rotating rod **15** to rotate, so that the rotating wheel **22** drives the glass **21** to rotate, and the short rod **39** rotates forward through the ratchet **46** without driving the transmission rod **47** to rotate, the hydraulic pump **50** Starting, the hydraulic pump **50** passes the hydraulic rod **51** to make the sliding rod **55** The front movement causes the sanding block **58** to conform to the side of the glass **21**, and the sanding block **58** polishes the side of the glass **21**.

[0029] The invention has the beneficial effects that: after the scribing mechanism completes the scribing of the glass, the sliding block moves downward by the first motor, and the sliding block moves downward to remove the excess glass, without manual manual operation, thereby avoiding The smashed glass scratches the artificial situation, and the polishing block in the grinding mechanism polishes the glass to ensure that the glass is not scratched when the glass is manually removed, and when the glass is large, the excess glass is moved downward by the sliding block. It is easier to remove and worth promoting.

[0030] It will be apparent to those skilled in the art that various modifications of the above embodiment can be made without departing from the spirit and scope of the invention. They all fall within the scope of protection of the present invention. The protection of the invention is subject to the claims appended hereto.

1. A processing apparatus for elliptical annular optical glass, including: a processing box, wherein: the processing box is provided with a processing chamber with an opening forward, and a sliding block is slidably mounted in the processing chamber, the sliding block a through hole is disposed therein, the through hole is communicated with a cavity, the cavity extends forwardly through the front side of the sliding block, the glass can be placed in the cavity, and the left inner wall of the processing cavity is connected a threaded cavity, the top wall of the threaded cavity is fixedly mounted with a first motor, and a bottom surface of the output shaft of the first motor is fixedly mounted with a threaded rod, the threaded rod extending downward to a bottom wall of the threaded cavity, the thread The threaded block is slidably mounted in the cavity, and the threaded block is screwed to the threaded rod. The right side of the thread block is fixedly mounted on the left side of the sliding block, and the top surface of the sliding block is symmetrically fixed to the fixed block. The top wall of the processing chamber is symmetrically connected with a fixed cavity, the fixed cavity is slidably mounted with the fixed block, and the top wall of the processing cavity is connected with a motor cavity hinge rod, and the motor cavity hinge rod is provided therein. Dash the glass a scribing mechanism, after the scribing mechanism is completed, the first motor starts to rotate the threaded rod, so that the thread block drives the sliding block to move downward, and the sliding block removes excess glass A grinding mechanism capable of grinding the glass is disposed on the rear side of the processing chamber.

2. The processing apparatus for elliptical annular optical glass according to claim **1**, wherein the bottom wall of the processing chamber is symmetrically placed with a collect-

ing box, and the collecting box is provided with an opening chamber with an opening upward.

3. The processing apparatus for elliptical annular optical glass according to claim **1**, wherein the bottom wall of the processing chamber is rotatably mounted with a rotating rod, and the top surface of the rotating rod is fixedly mounted to the rotating table.

4. The processing apparatus for elliptical annular optical glass according to claim **1**, wherein the scribing mechanism comprises a second motor fixedly mounted on a top wall of the motor cavity hinge rod, and the second motor is downwardly The output shaft is fixedly mounted with a power rod, the bottom surface of the power rod is fixedly mounted with a disc, and the connecting block is fixedly mounted on the disc. The connecting block is provided with a connecting cavity, and the top surface of the connecting block is fixedly mounted with a moving block. The top wall of the hinge joint of the motor cavity is connected with an annular cavity, and the annular cavity is slidably mounted with the moving block, and the scribe is slidably mounted in the connecting cavity.

5. The processing apparatus for elliptical annular optical glass according to claim **1**, wherein the top wall of the articulated rod of the motor cavity is connected with an elliptical cavity, and the limiting block is slidably mounted in the elliptical cavity. The bottom surface of the limiting block is fixedly mounted with a third motor, and the output shaft of the third motor is fixedly mounted with a fixing rod, and the fixing rod is threadedly mounted with the scriber.

6. The processing apparatus for elliptical annular optical glass according to claim **1**, wherein: the rotating rod is fixedly mounted with a gas pump, and the top surface of the rotating plate is fixedly mounted with a suction cup, the suction cup and the suction cup A connecting pipe is fixedly installed between the air pumps.

7. The processing apparatus for elliptical annular optical glass according to claim **1**, wherein a transmission cavity is vertically symmetrically arranged in the processing box, and the rotating rod extends downwardly through the lower side. a top wall of the transmission chamber, a ratchet cavity is disposed above the hinge rod of the motor cavity, and a top surface of the output shaft of the second motor is fixedly mounted with a short rod, and the short rod extends upwardly through the bottom wall of the ratchet cavity, The top surface of the short rod is fixedly mounted with a ratchet wheel, and the transmission rod is rotatably mounted between the ratchet wheel chamber and the upper side of the transmission cavity, the transmission rod is fixedly connected with the ratchet wheel, and the first gear is fixedly mounted on the top surface of the transmission rod. a second gear is fixedly mounted on a bottom surface of the rotating rod, and a long rod is rotatably mounted between the transmission chambers on the upper and lower sides, and the long rod is symmetrically fixedly mounted on the third gear, and the second gear and the lower side are A first chain is mounted between the three gears, and a second chain is driven between the first gear and the third gear on the upper side.

8. The processing apparatus for elliptical annular optical glass according to claim **1**, wherein the grinding mechanism comprises a hydraulic rod hole connected to an inner wall of a rear side of the processing chamber, after the processing box a hydraulic pump is fixedly mounted on the side, and a hydraulic rod is fixedly mounted on a front side of the forward output shaft of the hydraulic pump, the hydraulic rod passes through the hydraulic rod hole, and a spring chamber is disposed in the hydraulic rod, and the spring chamber is disposed in the spring chamber slidingly mounting a sliding rod, a sliding spring is fixedly mounted between the rear side surface of the sliding rod and the inner wall of the rear side of the spring chamber, and a left side inner wall of the processing chamber is hingedly mounted with a motor cavity hinge rod, the motor chamber hinge rod and the sliding rod the hinged mounting is hingedly mounted on the hinge joint of the motor cavity, and the grinding block is provided with a grinding cavity, and the grinding block is fixedly mounted in the grinding cavity.

* * * * *