J. R. CONRAD.

EXPANSION BOLT.

APPLICATION FILED APR. 19, 1912.

1,050,345. Patented Jan. 14, 1913.

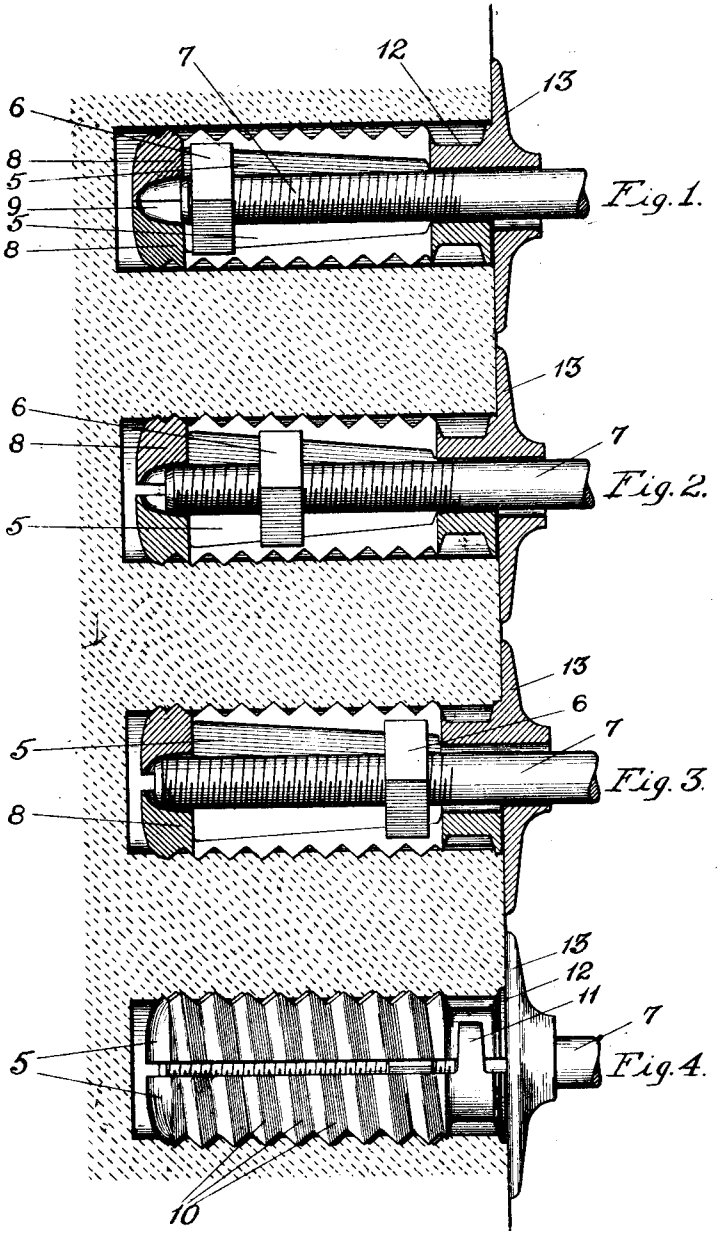

Witnesses:

J. M. P. Bond

Thomas A. Banning Jr.

Inventor:

Joseph R. Conrad.

By Banning & Banning

Attorneys.

UNITED STATES PATENT OFFICE.

JOSEPH R. CONRAD, OF CHICAGO, ILLINOIS, ASSIGNOR, BY MESNE ASSIGNMENTS, TO U. S. EXPANSION BOLT CO., OF NEW YORK, N. Y., A CORPORATION OF NEW YORK.

EXPANSION-BOLT.

1,050,345. Specification of Letters Patent. Patented Jan. 14, 1913.

Application filed April 19, 1912. Serial No. 691,839.

To all whom it may concern:

Be it known that I, JOSEPH R. CONRAD, a citizen of the United States, residing at Chicago, in the county of Cook and State of Illinois, have invented certain new and useful Improvements in Expansion-Bolts, of which the following is a specification.

This invention relates to bolts adapted to be anchored within a solid substance, and particularly such as are designed for attaching fixtures to brick or concrete walls.

The principal objects of the present invention are to construct an expansion bolt having but a few parts, which may be anchored within a wall with greater firmness and security than has been heretofore possible; and to produce an expansion bolt having shells adapted to be shifted or expanded away from each other, which operation of shifting or expanding shall be automatically predetermined in such manner as not to weaken or impair the wall at the point where it is locked therein.

Other objects of my invention will appear from a detailed description of the drawing and operation of the parts, as hereinafter set forth and claimed.

In the drawing, Figure 1 is a section of a wall and an expansion bolt therein showing the position of the bolt and shells before expansion has commenced; Fig. 2 is a similar view, but shows the position assumed by the parts of the expansion bolt at the commencement of the expanding operation; Fig. 3 is a similar view showing, however, the position assumed by the parts of the expansion bolt after the operation of expansion is completed; and Fig. 4 is a view similar to Fig. 3 showing the expansion bolt in elevation.

The expansion bolt of the present invention comprises essentially three principal parts, viz., a pair of segmental symmetrical shells 5, an expanding member 6 adapted to travel longitudinally therein, and a bolt 7, upon which the said expanding member is threaded, and by which the said longitudinal movement is imparted thereto. The shells illustrated in the drawing are each formed on the interior with two faces at right angles to each other and inclined from the inner to the outer end thereof, and are adapted to present contact faces for an expander in the form of a square nut which bears each of its sides against one of the said inclined interior faces of the shells. This form of construction is described at length and claimed in my pending application, Serial No. 622,109, filed April 19, 1911. It should be understood that the present invention is equally applicable in combination with any expanding member and shells differing materially in cross section.

At the inner end of each of the shells, there is formed a web 8 having a portion thereof cut away to provide in effect a pocket 9. The arrangement of each of the webs 8 and cut-away portions therein is such that, when the shells are placed together in position, a complete closure is provided at the inner end thereof with the tapered pocket formed in substantially the axial line of the shells. The pocket at the side which faces the interior of the shells is of a suitable diameter to receive the inner or acting end of the bolt 7, and tapers inwardly in such a manner that upon advancement of the bolt therein, the shells will of necessity be forced apart at their inner ends as by a wedge action.

The exterior of the shells is provided with a number of spirally-formed threads 10 thereon adapted to effect a tight and secure hold against the wall within which the expansion bolt is anchored. Locking means for holding the shells in position together are provided adjacent the outer end of one of said shells by means of a pair of lugs 11 formed integrally therewith and adapted when bent inwardly to embrace a neck portion 12 upon the other of said shells. A flange 13 formed at the outer end of one of the shells serves as a cap to cover the edges of the hole within which the expansion bolt is secured, as well as to predetermine its proper longitudinal position therein.

In putting into use the expansion bolt of the present invention, the steps and operations involved are substantially as follows: The expansion bolt is first assembled by inserting the bolt through the flanged end of one of the shells and threading the nut thereon. The other shell is then brought into proper registering position and is locked with respect to its co-acting shell by means of the bendable lugs formed at the outer end thereof. With the nut in posi-

tion at the extreme inner end of the shells to permit of their lying close to one another the expansion bolt is then inserted into a hole of proper size which has been formed in the wall or ceiling where it is to be anchored. Rotation of the bolt is then commenced which will cause its acting end to seat within the tapered pocket on the interior of the shells to apply a wedge pressure thereto. Inasmuch as the outer ends of the shells are held closely together by means of the embrace of the locking lugs, movement of the nut in that direction against the inclined faces of the shells cannot readily take place, with the result that the acting end of the bolt will be advanced farther into the tapered pocket at the inner end of the shells; this movement causes the shells at their inner end to expand and bite into the material within which the expansion bolt is being anchored. It is obvious after the acting end of the bolt has advanced a certain distance and has expanded the inner ends of the shells against a constantly increasing pressure that further inward movement of the bolt must cease, and that resistance to the travel of the nut being now less than that offered to the longitudinal movement of the bolt, the nut will be caused to travel outward. (See Fig. 2). During the longitudinal travel of the nut to the position indicated in Fig. 3 the inner ends of the shells will be constantly maintained in expanded position, for the reason that the bolt continues to exert an end thrust against the inner end of the tapered pocket, thereby effectually preventing any tendency of the shells to collapse at their inner ends. The limit of expansion will obviously be reached when the nut has advanced to the outer end of the shells, as shown in Fig. 3, which point can only be reached after sufficient expanding pressure has been communicated to the outer end of the shells to cause the locking lugs to release their hold to permit of the shells shifting away from each other.

By the construction of an expansion bolt which operates substantially in the manner just described, I am enabled to secure a hold within the hole more tight and secure than is possible with any other form of bolt of which I am aware. In order that the outer edges of the hole may not be weakened or mutilated, being obviously the part most susceptible to crumbling and chipping, it is essential that the operation of expansion should take place initially at the inner end of the hole. This I have accomplished by means of the acting end of the bolt which is made to exert a wedge action within the tapered pocket formed at the interior of the shells. It is not enough, however, that the expansion should be commenced at the inner end of the shells for the reason that greatest efficiency will result only when the whole exterior surface of the shells is made to grip and engage the interior of the hole within which the expansion bolt is anchored, thus guarding against possible slipping or sliding movement of the shells within the hole.

As has just been explained, the shells of the present invention are expanded at their outer ends to attain the greatest locking efficiency, only after the inner ends thereof have first been firmly embedded against the sides of the hole. The successful operation of causing the expansion to take place in substantially the manner just described is assured through the agency of the locking lugs at the outer ends of the shells which by retarding the advancement of the nut causes the bolt to advance into the tapered pocket to expand first the inner ends of the shells.

The pocket, as shown in the drawing, is substantially in the form of a parabolic conoid and when so shaped is admirably adapted for the purposes of this invention. It will be noted that the acting end of the bolt must engage first with that portion of the pocket where the sides taper only slightly, thereby conducing to the ready expansion of the shells at the inner end. As the acting end of the bolt advances into the pocket, however, the radius of the curve thereof decreases, with the result that increasing pressure is gradually brought upon the inner end of the bolt to prevent its further ingress into the pocket. It is customary to form such bolts with their ends beveled, as shown in the drawing, so that the thrust of the bolt upon the faces of the pocket is not that of an edge so sharp as to mutilate either of the engaging parts, or to produce an undesirable amount of friction.

The lugs formed upon one of the shells adapted to embrace the other thereof for the purpose of effecting a releasable union therebetween operates not only in conjunction with the engaging action of the bolt in the tapered pocket at the inner end of the shells to produce the novel expanding operation already explained, but serves as well to lock the shells together in proper relation to each other so as to facilitate their insertion within the wall. It will be noted also that the neck portion of the shell which is embraced by the locking lugs is so formed as to prevent longitudinal movement of one shell with respect to the other, when embraced by the locking lugs. This is of particular importance in view of the fact that without the provision of means to prevent longitudinal movement of one shell with respect to the other expansion could not take place at the inner end of the shells through the wedge action exerted by the acting end of the bolt.

It will be observed that, although the expansion bolt of my invention is construct-

ed so as to expand upon a novel principle of operation, and to present certain other features of advantage and importance, there is not provided any additional parts tending to increase expense or complication. The nut and bolt employed to effect the expansion of the shells may be of the ordinary standard pattern. The means also by which the shells are releasably held together, as well as the cap piece used to predetermine the longitudinal position of the shells within the walls, and to conceal the hole therein, are formed integral with the shells, thus minimizing the number of parts necessary to the operation of the expansion bolt in the manner herein described.

I claim:

1. In an expansion bolt, a pair of co-acting shells, each formed on its interior with longitudinally inclined faces, an expansion member within said shells adapted when advanced against said inclined faces to force said shells apart, a web formation at the inner end of each of said shells having a cut-away tapered portion therein, a bolt in engagement with said expansion member adapted when rotated to advance its inner acting end against the tapered faces of said cut-away portion to force the inner ends of said shells apart, and means for preventing initial expansion of said shells at the outer ends thereof, substantially as described.

2. In an expansion bolt, a pair of co-acting shells, each formed on its interior with longitudinally inclined faces, an expansion member within said shells adapted when advanced against said inclined faces to force said shells apart, a web formation at the inner end of each of said shells having a cut-away tapered portion therein, a bolt in engagement with said expansion member adapted when rotated to advance its inner acting end against the tapered faces of said cut-away portion to force the inner ends of said shells apart, and means for preventing initial expansion of said shells at the outer ends thereof, said means comprising a pair of bendable lugs formed at the outer end of one of said shells adapted to yieldingly embrace a portion of the other of said shells, substantially as described.

3. In an expansion bolt, a pair of co-acting shells, each formed on its interior with longitudinally inclined faces, an expansion member within said shells adapted when advanced against said inclined faces to force said shells apart, a web portion at the inner end of each of said shells having a cut-away tapered portion therein, constituting when brought into registering position with each other a pocket substantially in the form of a parabolic conoid, and a bolt in engagement with said expansion member adapted when rotated to advance its inner acting end against the tapered walls of said pocket to force the inner ends of said shells apart, substantially as described.

4. In an expansion bolt, a pair of co-acting shells, each formed on its interior with longitudinally inclined faces, an expansion member within said shells adapted when advanced against said inclined faces to force said shells apart, a web portion at the inner end of each of said shells having a cut-away tapered portion therein constituting when brought into registering position with each other a pocket substantially in the form of a parabolic conoid, a bolt in engagement with said expansion member adapted when rotated to advance its acting end against the tapered portion of said pocket to force the inner ends of said shells apart, and means for preventing initial expansion of said shells at the outer ends thereof, substantially as described.

5. In an expansion bolt, a pair of co-acting shells, each formed on its interior with longitudinally inclined faces, an expansion member within said shells adapted when advanced against said inclined faces to force said shells apart, a web adjacent the inner end of each of said shells, the facing walls of each of said webs tapering toward the inner ends thereof, a bolt in engagement with said expansion member adapted when rotated to advance its inner acting end between the tapering facing walls of said webs to force the inner ends of said shells apart, means for retarding the advancement of said expansion member toward the outer ends of said shells, said means serving also to maintain a fixed longitudinal relation between said shells, substantially as described.

6. In an expansion bolt, a pair of co-acting shells, each formed on its interior with longitudinally inclined faces, an expansion member within said shells adapted when advanced against said inclined faces to force said shells apart, a web adjacent the inner end of each of said shells, the facing walls of each of said webs tapering toward the inner ends thereof, a bolt in engagement with said expansion member, adapted when rotated to advance its inner acting end between said tapering faces to force said inner ends of said shells apart, and means for retarding the advancement of said expansion member within said shells toward the outer ends thereof comprising a pair of lugs integrally formed with one of said shells, and adapted to yieldingly embrace the other thereof, said means serving also to maintain a fixed longitudinal relation between said shells, substantially as described.

7. In an expansion bolt, a pair of co-acting shells, each formed on its interior with longitudinally inclined faces, an expansion member within said shells adapted when ad-

vanced against said inclined faces to force said shells apart, a web adjacent the inner end of each of said shells, the facing walls of each of said webs tapering toward the inner ends thereof, a bolt in engagement with said expansion member, adapted when rotated to advance its inner acting end between said tapering faces to force the inner ends of said shells apart, means for retarding the initial advancement of said expansion member within said shells toward the outer ends thereof comprising a pair of lugs integrally formed with one of said shells, and adapted to yieldingly embrace the other thereof, said means serving also to maintain a fixed longitudinal relation between said shells, and a flange member secured to the outer end of one of said shells adapted to rest against the exterior surface of the anchoring substance, the said latter member serving both to determine the longitudinal position of said shells and to prevent lateral movement thereof, within said substance, substantially as described.

8. In an expansion bolt, a pair of co-acting shells, each formed on its interior with longitudinally inclined faces, an expansion member within said shells adapted when advanced against said inclined faces to force said shells apart, means for advancing said expansion member against said inclined faces, means for expanding the inner ends of said shells, and means for retarding the advancement of said expansion member to permit initial expansion at the inner ends of said shells, substantially as described.

9. In an expansion bolt, a plurality of segments adapted to be expanded within a substance, means for expanding said segments at their inner ends, means for expanding said segments at their outer ends, and means for retarding the expansion of said segments at their outer ends to permit initial expansion at the inner ends thereof, substantially as described.

JOSEPH R. CONRAD.

Witnesses:
WALTER S. ROTH,
EPHRAIM BANNING.