Jan. 16, 1940. G. G. GREULICH 2,187,317

BEARING PILE CONSTRUCTION

Filed Nov. 23, 1938

FIG. 1.

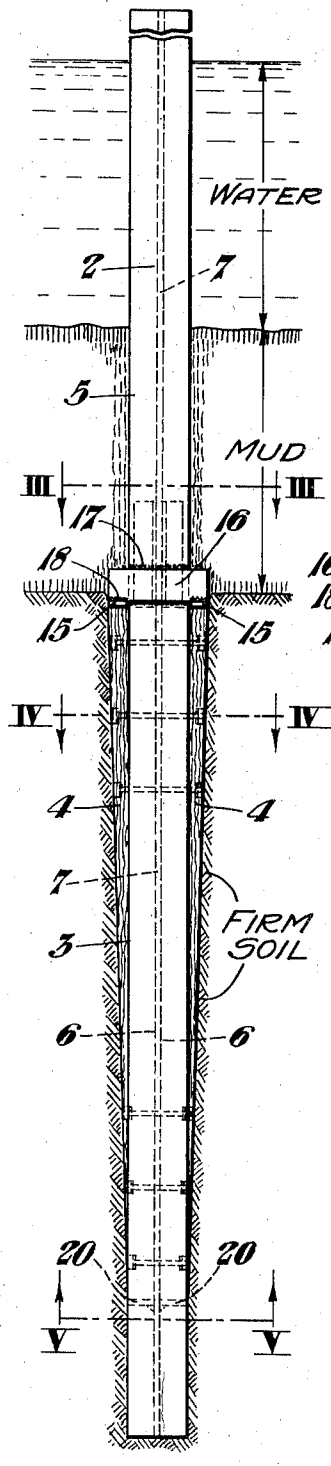


FIG. 2.

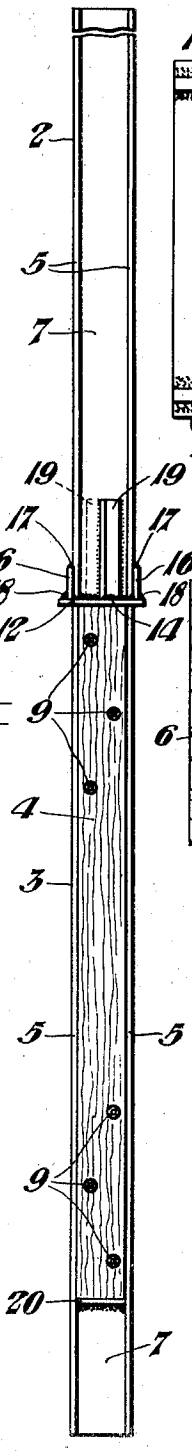

FIG. 3.

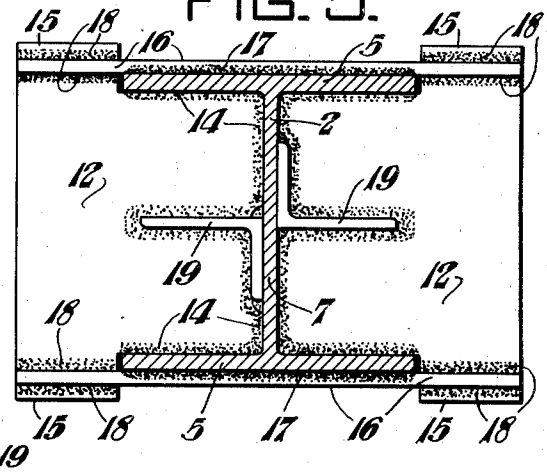

FIG. 4.

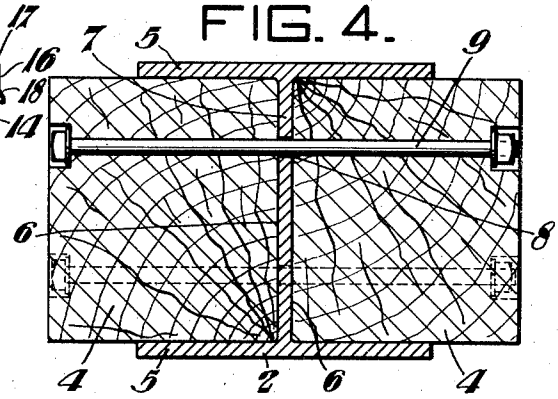

FIG. 5.

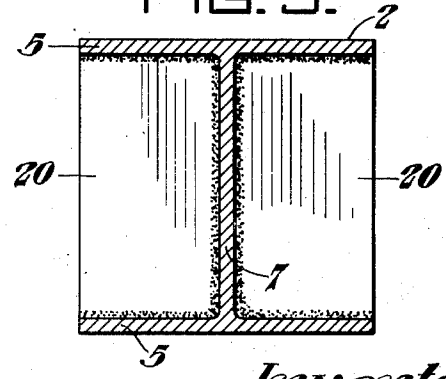

Inventor:
GERALD G. GREULICH,
by John E. Jackson
his Attorney.

Patented Jan. 16, 1940 2,187,317

# UNITED STATES PATENT OFFICE

2,187,317

## BEARING PILE CONSTRUCTION

Gerald G. Greulich, Mount Lebanon, Pa.

Application November 23, 1938, Serial No. 242,087

1 Claim. (Cl. 61—53)

This invention relates to load-bearing pile constructions and particularly to the formation of a tapered enlargement thereon.

An object of the present invention is to provide a tapered enlargement only in that portion of the pile which is in firm load-carrying soil.

A further object of the present invention is to provide tapered lagging members which are positioned between the flanges of the beam member with the taper decreasing toward the penetrating end of the pile so that the lagging members are in alignment with the flanges of the beam member at the penetrating end.

Other objects and advantages will become apparent as the description proceeds and reference is had to the accompanying drawing in which:

Figure 1 is an elevation showing a conventional type of H or I-beam piling provided with the tapered enlargement over that portion of the pile which is in firm load-carrying soil;

Figure 2 is an elevation at right angles to Figure 1;

Figure 3 is a section on line III—III of Figure 1;

Figure 4 is a section on line IV—IV of Figure 1; and

Figure 5 is a section on line V—V of Figure 1.

In the drawing, the numeral 2 represents the main body portion of the bearing pile which, in the present showing, comprises a conventional type of metal H or I-shaped beam member extending down through the water and mud into the stratum of firm soil.

On that portion of the main body which penetrates the firm soil stratum, there is provided an enlargement indicated generally at 3, which enlargement tapers gradually downward from the top to the bottom of said enlarged portion with the lower extremities thereof in substantial alignment with the outer edges of the flanges of the bearing pile member.

The enlargement for the bearing pile is formed by securing lagging members 4 within the space between the inner surface of the flanges 5 of the H or I-shaped member. These lagging members may be timber, as shown, or if desired, may be formed from metallic sections, pre-cast concrete, or other suitable material. The lagging members are each provided with a straight face 6 adapted to abut the web 7 of the H or I-shaped beam member, while the opposite faces of said lagging members taper downwardly from the top surface toward the bottom or penetrating end of the bearing pile, at which point they become aligned with the outer edges of the flanges 5 as clearly indicated in Figure 1. The side walls of the lagging members are straight and extend parallel to the longitudinal axis of the bearing pile so that they are flush with the inner surfaces of the flanges 5 as they taper downwardly toward the penetrating end of the bearing pile.

At the top portion of the tapered enlargement, the lagging members extend beyond the edges of the flanges 5 so that the top cross-sectional area of each lagging member is greater than the cross-sectional area thereof at the point of tangency with the edges of the flanges of the beam member. The web 7 is provided with apertures 8 through which is adapted to pass threaded bolts 9 in order to securely maintain the lagging members in position. Each lagging member is provided with a cut-out portion for receiving the head of the threaded bolt and the nut for securely retaining the lagging members together so that an unobstructed surface is provided upon the downwardly tapered lagging members.

Metallic plates 12 are positioned on top of the tapered lagging members and welded in any conventional manner, as indicated at 14 to the flanges and web of the H or I-shaped beam member. These metallic plates which extend outwardly beyond the edges of the flanges 5 to a point in substantial alignment with the outer surfaces of each lagging member 4 are provided with laterally extending portions 15 terminating beyond the outer transverse width of said H or I-shaped beam member so as to provide a support for the plates 16. These plates 16 are parallel to the flanges 5 and are welded thereto as indicated at 17 and to the laterally extending portions 15 as indicated at 18.

Positioned upon the metallic plates 12 and welded thereto and to each side of the web 7 are angle plates 19 which serve as reenforcing members for the plates 12.

Metallic plates 20 are positioned within the space between the flanges and web of the H or I-shaped beam member and abut the bottom portion of the tapered lagging members to provide a protective means for the bottom of the lagging members adjacent the penetrating end of the bearing pile at which point the lagging members are in substantial alignment with the outer edges of the flanges. These plates 20 are welded, in any conventional manner, to the inner surface of the flanges 5 and the web 7.

Under the present construction, there is provided an enlargement for a bearing pile, which enlargement is only over that section of the pile which is in firm load-carrying soil so as to pro-

duce a bearing pile capable of securing a greater displacement of earth with a minimum amount of lagging material.

While I have shown and described a specific embodiment of the present invention it will be seen that I do not wish to be limited exactly thereto, since various modifications may be made without departing from the scope of the invention, as defined by the following claim.

I claim:

A steel bearing pile comprising a beam member of H or I-shaped cross section having a driving end and a penetrating end, oppositely disposed lagging members positioned between the inner surfaces of the flanges and abutting each side of the web of said beam member, said lagging members each having a straight surface abutting the web of said beam member and an outer surface tapering downwardly from its top to its bottom to provide a tapered enlargement on said bearing pile only over that portion of said bearing pile which is in firm load carrying soil, spaced openings formed in the web of said beam member, means for securing said oppositely disposed lagging members together on said beam member, means for protecting the ends of said lagging member adjacent the penetrating end of said bearing pile and means positioned on the top edges of said lagging member to protect said lagging members, said means including plates on each side of the web of said beam member and extending outwardly beyond the edges of the flanges, said plates welded to the web and inner flanges of said beam member and plates supported by the outwardly extending portions of said first mentioned plates in parallel alignment with the outer edges of said flanges, said last mentioned plates welded to said first mentioned plates and to the outer surfaces of said flanges of said beam member.

GERALD G. GREULICH.