(12) INTERNATIONAL APPLICATION PUBLISHED UNDER THE PATENT COOPERATION TREATY (PCT)

(19) World Intellectual Property Organization
International Bureau

(43) International Publication Date
20 February 2014 (20.02.2014)

WIPO | PCT

(10) International Publication Number
WO 2014/028806 A2

(51) International Patent Classification: Not classified

(21) International Application Number:
PCT/US2013/055278

(22) International Filing Date:
16 August 2013 (16.08.2013)

(25) Filing Language: English

(26) Publication Language: English

(30) Priority Data:

61/684,672	17 August 2012 (17.08.2012)	US
61/697,710	6 September 2012 (06.09.2012)	US
61/700,182	12 September 2012 (12.09.2012)	US
61/702,650	18 September 2012 (18.09.2012)	US
61/736,692	13 December 2012 (13.12.2012)	US
61/798,821	15 March 2013 (15.03.2013)	US
61/805,027	25 March 2013 (25.03.2013)	US
61/805,053	25 March 2013 (25.03.2013)	US
61/805,042	25 March 2013 (25.03.2013)	US
61/805,030	25 March 2013 (25.03.2013)	US
61/804,971	25 March 2013 (25.03.2013)	US
61/804,998	25 March 2013 (25.03.2013)	US
61/804,942	25 March 2013 (25.03.2013)	US
61/805,038	25 March 2013 (25.03.2013)	US
61/805,003	25 March 2013 (25.03.2013)	US
61/804,990	25 March 2013 (25.03.2013)	US

(71) Applicant: **FLEXTRONICS AP, LLC** [US/US]; 6201 America Center Drive, San Jose, CA 95134 (US).

(72) Inventors: **SIRPAL, Sanjiv**; 3264 Stocksbridge Avenue, Oakville, ON L6M 0E3 (CA). **SELIM, Mohammed**; 2488 Oakhaven Drive, Oakville, ON L6M4B9 (CA).

(74) Agent: **REINHARDT, Dean, N.**; SHERIDAN ROSS P.C., 1560 Broadway, Suite 1200, Denver, CO 80202 (US).

(81) Designated States *(unless otherwise indicated, for every kind of national protection available)*: AE, AG, AL, AM, AO, AT, AU, AZ, BA, BB, BG, BH, BN, BR, BW, BY, BZ, CA, CH, CL, CN, CO, CR, CU, CZ, DE, DK, DM, DO, DZ, EC, EE, EG, ES, FI, GB, GD, GE, GH, GM, GT, HN, HR, HU, ID, IL, IN, IS, JP, KE, KG, KN, KP, KR, KZ, LA, LC, LK, LR, LS, LT, LU, LY, MA, MD, ME, MG, MK, MN, MW, MX, MY, MZ, NA, NG, NI, NO, NZ, OM, PA, PE, PG, PH, PL, PT, QA, RO, RS, RU, RW, SA, SC, SD, SE, SG, SK, SL, SM, ST, SV, SY, TH, TJ, TM, TN, TR, TT, TZ, UA, UG, US, UZ, VC, VN, ZA, ZM, ZW.

(84) Designated States *(unless otherwise indicated, for every kind of regional protection available)*: ARIPO (BW, GH, GM, KE, LR, LS, MW, MZ, NA, RW, SD, SL, SZ, TZ, UG, ZM, ZW), Eurasian (AM, AZ, BY, KG, KZ, RU, TJ, TM), European (AL, AT, BE, BG, CH, CY, CZ, DE, DK, EE, ES, FI, FR, GB, GR, HR, HU, IE, IS, IT, LT, LU, LV,

[Continued on next page]

(54) Title: DYNAMIC ARRANGMENT OF AN APPLICATION CENTER BASED ON USAGE

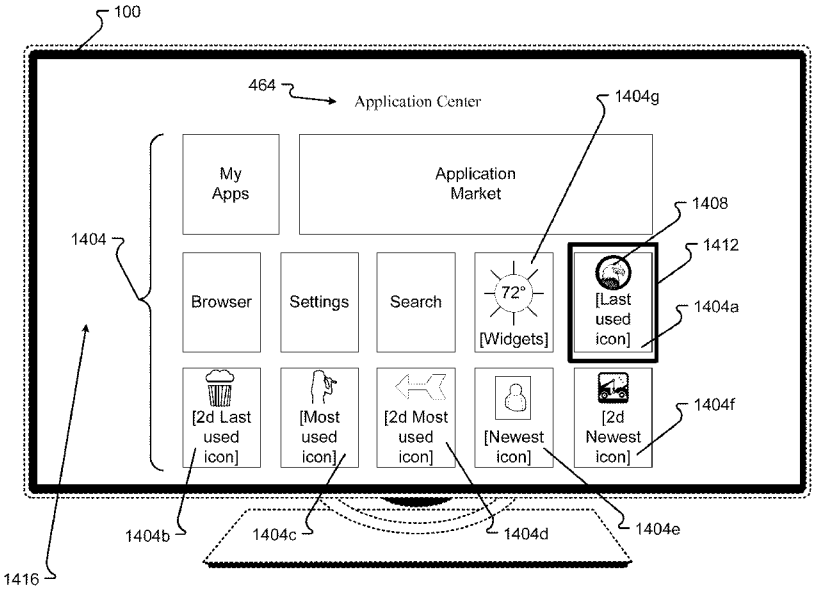

Fig. 14

(57) Abstract: An Intelligent TV can dynamically arrange applications in an application center based on usage. The application center provides contextual panels with detailed information about selected applications and provides recommended applications. The panels may be both interactive or informational. The Intelligent TV can receive a request to activate a panel through the reception of signals from a remote control or a user interface. The layout, information, and content of a panel may depend on the application with focus when a user activates the panel. An Intelligent TV may also provide a widget panel which simplifies selection, use, and display of widgets.

WO 2014/028806 A2

MC, MK, MT, NL, NO, PL, PT, RO, RS, SE, SI, SK, SM, TR), OAPI (BF, BJ, CF, CG, CI, CM, GA, GN, GQ, GW, KM, ML, MR, NE, SN, TD, TG).

Published:

— *without international search report and to be republished upon receipt of that report (Rule 48.2(g))*

DYNAMIC ARRANGMENT OF AN APPLICATION CENTER BASED ON USAGE

CROSS REFERENCE TO RELATED APPLICATION

[0001] The present application claims the benefits of and priority, under 35 U.S.C. § 119(e), to U.S. Provisional Application Serial Nos. 61/684,672 filed August 17, 2012, "Smart TV"; 61/702,650 filed September 18, 2012, "Smart TV"; 61/697,710 filed September 6, 2012, "Social TV"; 61/700,182 filed September 12, 2012, "Social TV Roadmap"; 61/736,692 filed December 13, 2012, "SmartTV"; 61/798,821 filed March 15, 2013, "SmartTV"; 61/804,942 filed March 25, 2013, "SmartTV"; 61/804,998 filed March 25, 2013, "SmartTV"; 61/804,971 filed March 25, 2013, "SmartTV"; 61/804,990 filed March 25, 2013, "SmartTV"; 61/805,003 filed March 25, 2013, "SmartTV"; 61/805,053 filed March 25, 2013, "SmartTV"; 61/805,030 filed March 25, 2013, "SmartTV"; 61/805,027 filed March 25, 2013, "SmartTV"; 61/805,042 filed March 25, 2013, "SmartTV"; and 61/805,038 filed March 25, 2013, "SmartTV." Each of the aforementioned documents is incorporated herein by reference in their entirety for all that they teach and for all purposes.

BACKGROUND

[0002] Consolidation of device features or technological convergence is in an increasing trend. Technological convergence describes the tendency for different technological systems to evolve toward performing similar tasks. As people use more devices, the need to carry those devices, charge those devices, update software on those devices, etc. becomes more cumbersome. To compensate for these problems, technology companies have been integrating features from different devices into one or two multi-functional devices. For example, cellular phones are now capable of accessing the Internet, taking photographs, providing calendar functions, etc.

[0003] The consolidation trend is now affecting the design and functionality of devices generally used in the home. For example, audio receivers can access the Internet, digital video recorders can store or provide access to digital photographs, etc. The television in home audio/video systems remains a cornerstone device because the display function cannot be integrated into other devices. As such, consolidating home devices leads to integrating features and functionality into the television. The emergence of the Smart Television (Smart TV) is evidence of the trend to consolidate functionality into the television.

[0004] A Smart TV is generally conceived as a device that integrates access to the Internet and Web 2.0 features into television sets. The Smart TV represents the trend of technological convergence between computers and television sets. The Smart TV generally focuses on online interactive media, Internet TV, on-demand streaming media, and generally does not focus on traditional broadcast media. Unfortunately, most Smart TVs have yet to provide seamless and intuitive user interfaces for navigating and/or executing the various features of the Smart TV. As such, there are still issues with the consolidation of features and the presentation of these features in Smart TVs.

SUMMARY

[0005] There is a need for an Intelligent TV with intuitive user interfaces and with seamless user interaction capability. These and other needs are addressed by the various aspects, embodiments, and/or configurations of the present disclosure. Also, while the disclosure is presented in terms of exemplary embodiments, it should be appreciated that individual aspects of the disclosure can be separately claimed.

[0006] According to the disclosure, a non-transitory computer readable storage medium having stored thereon instructions that cause a processor to execute a method of organizing application icons on a television display is provided, the method comprising receiving input to activate an application center; retrieving application usage information from a storage medium; determining which application icons to display based on the retrieved application usage information; and displaying on the television display one or more application icons in the application center. Exemplary application usage information may include a last used application; a second last used application; a most used application; a second most used application; a newest application; and a second newest application. The method may further include receiving input to launch an application selected from the one or more application icons displayed in the application center; and launching the application selected. If the selected application icon is a widget icon, the method may include retrieving widget information from a storage medium; determining which widgets to display based on the retrieved widget information; and displaying on the television display one or more widgets in a widget panel. The method may yet further include receiving input for information about an application selected from the one or more application icons displayed in the application center; retrieving application information about the selected application; displaying on the television display the retrieved application information in an information panel; receiving input to launch the application displayed in the information panel; and launching the application. The method may

further include an information panel with a first list of one or more recommended applications; receiving input to list more recommended applications; displaying on the television display a second list of one or more recommended applications in a recommended application panel; receiving a selection of a recommended application displayed in the first list; and connecting to an application store to purchase or rent the selected recommended application. Application information may include, but is not limited to, a thumbnail; a name; a description; a version; a revision date; a developer name; a category name; a user rating; and a content rating.

[0007] According to the disclosure, a television system is provided, comprising: a display; a memory; a processor in communication with the memory and the display, the processor operable to: receive input to activate an application center; retrieve application usage information from a storage medium; determine which application icons to display based on the retrieved application usage information; and display, on the display, one or more application icons in the application center, wherein the application usage information comprises at least one of: a last used application, a second last used application, a most used application, a second most used application, a newest application, and a second newest application. The processor may further be operable to receive input for information about an application selected from the one or more application icons displayed in the application center; retrieve application information about the selected application from a storage medium; and display, on the display, the retrieved application information in an information panel. The information panel may include a first list of one or more recommended applications. The processor may further be operable to receive input to list more recommended applications and display, on the display, a second list of one or more recommended applications in a recommended application panel. The processor may be yet further operable to receive input to launch an application selected from the application icons displayed in the information panel and launch the selected application.

[0008] According to the disclosure, a method for organizing application icons on a intelligent television is disclosed and includes receiving input to activate an application center; retrieving application usage information from a storage medium; determining which application icons to display based on the retrieved application usage information; and displaying on the television display one or more application icons in the application center. The method may further include receiving input for information about an application selected from the one or more application icons displayed in the application

center; retrieving application information about the selected application from a storage medium; and displaying on the television display the retrieved application information in an information panel. The information panel may include a first list of one or more recommended applications. The method may further include receiving input to list more recommended applications and displaying, on the television display, a second list of one or more recommended applications in a recommended application panel. The method may yet further include receiving input to launch an application selected from the one or more application icons displayed in the application center; and launching the selected application.

[0009] The present disclosure can provide a number of advantages depending on the particular aspect, embodiment, and/or configuration. The current disclosure provides an application center that dynamically arranges applications and widgets based on usage. The application center allows quick access to core functionality, provides an unobtrusive design which allows for the active content to be in view, and provides a consistent user experience across all applications. The application center provides contextual panels with detailed information about selected applications and widgets and provides recommended applications and widgets. The current disclosure also provides a widget panel which simplifies use and display of widgets.

[0010] These and other advantages will be apparent from the disclosure.

[0011] The phrases "at least one", "one or more", and "and/or" are open-ended expressions that are both conjunctive and disjunctive in operation. For example, each of the expressions "at least one of A, B and C", "at least one of A, B, or C", "one or more of A, B, and C", "one or more of A, B, or C" and "A, B, and/or C" means A alone, B alone, C alone, A and B together, A and C together, B and C together, or A, B and C together.

[0012] The term "a" or "an" entity refers to one or more of that entity. As such, the terms "a" (or "an"), "one or more" and "at least one" can be used interchangeably herein. It is also to be noted that the terms "comprising," "including," and "having" can be used interchangeably.

[0013] The term "automatic" and variations thereof, as used herein, refers to any process or operation done without material human input when the process or operation is performed. However, a process or operation can be automatic, even though performance of the process or operation uses material or immaterial human input, if the input is received before performance of the process or operation. Human input is deemed to be material if such input influences how the process or operation will be performed. Human

input that consents to the performance of the process or operation is not deemed to be "material."

[0014] A "blog" (a blend of the term ***web log***) is a type of website or part of a website supposed to be updated with new content from time to time. Blogs are usually maintained by an individual with regular entries of commentary, descriptions of events, or other material such as graphics or video. Entries are commonly displayed in reverse-chronological order.

[0015] A "blogging service" is a blog-publishing service that allows private or multi-user blogs with time-stamped entries.

[0016] The term "cable TV" refers to a system of distributing television programs to subscribers via radio frequency (RF) signals transmitted through coaxial cables or light pulses through fiber-optic cables. This contrasts with traditional broadcast television (terrestrial television) in which the television signal is transmitted over the air by radio waves and received by a television antenna attached to the television.

[0017] The term "channel" or "television channel," as used herein, can be a physical or virtual channel over which a television station or television network is distributed. A physical cannel in analog television can be an amount of bandwidth, typically 6, 7, or 8 MHz, that occupies a predetermine channel frequency. A virtual channel is a representation, in cable or satellite television, of a data stream for a particular television media provider (e.g., CDS, TNT, HBO, etc.).

[0018] The term "computer-readable medium," as used herein, refers to any tangible storage and/or transmission medium that participate in providing instructions to a processor for execution. Such a medium may take many forms, including but not limited to, non-volatile media, volatile media, and transmission media. Non-volatile media includes, for example, NVRAM, or magnetic or optical disks. Volatile media includes dynamic memory, such as main memory. Common *form*s of computer-readable media include, for example, a floppy disk, a flexible disk, hard disk, magnetic tape, or any other magnetic medium, magneto-optical medium, a CD-ROM, any other optical medium, punch cards, paper tape, any other physical medium with patterns of holes, a RAM, a PROM, and EPROM, a FLASH-EPROM, a solid state medium like a memory card, any other memory chip or cartridge, a carrier wave as described hereinafter, or any other medium from which a computer can read. A digital file attachment to e-mail or other self-contained information archive or set of archives is considered a distribution medium equivalent to a tangible storage medium. When the computer-readable media is

configured as a database, it is to be understood that the database may be any type of database, such as relational, hierarchical, object-oriented, and/or the like. Accordingly, the disclosure is considered to include a tangible storage medium or distribution medium and prior art-recognized equivalents and successor media, in which the software implementations of the present disclosure are stored.

[0019] The term "enhanced television" (ETV) refers to a collection of specifications developed under the OpenCable project of CableLabs (Cable Television Laboratories, Inc.) that define an ETV Application consisting of resources (files) adhering to the Enhanced TV Binary Interchange Format (EBIF) content format as well as PNG images, JPEG images, and PFR downloadable fonts. An ETV application is normally delivered through an MPEG transport stream and accompanies an MPEG program containing video and audio elementary streams. An "ETV Application" is a collection of resources (files) that include one or more EBIF resources that represent viewable information in the form of pages. Two forms of a given ETV Application may be distinguished: (1) an interchange form and (2) an execution form. The interchange form of an ETV Application consists of the resources (files) that represent the compiled application prior to its actual execution by an ETV User Agent. The execution form of an ETV Application consists of the stored, and possibly mutated forms of these resources while being decoded, presented, and executed by an ETV User Agent. An "ETV User Agent" is a software component that operates on a set-top box, a television, or any other computing environment capable of receiving, decoding, presenting, and processing an ETV Application. This component usually provides, along with its host hardware environment, one or more mechanisms for an end-user to navigate and interact with the multimedia content represented by ETV Applications.

[0020] The term "high-definition television" (HDTV) provides a resolution that is substantially higher than that of standard-definition television. HDTV may be transmitted in various formats, namely 1080p - 1920×1080p: 2,073,600 pixels (approximately 2.1 megapixels) per frame, 1080i (which is typically either 1920×1080i: 1,036,800 pixels (approximately 1 megapixel) per field or 2,073,600 pixels (approximately 2.1 megapixels) per frame or 1440×1080i:[1] 777,600 pixels (approximately 0.8 megapixels) per field or 1,555,200 pixels (approximately 1.6 megapixels) per frame), or 720p - 1280×720p: 921,600 pixels (approximately 0.9 megapixels) per frame. As will be appreciated, "frame size" in pixels is defined as number of horizontal pixels × number of vertical pixels, for example 1280 × 720 or 1920 × 1080. Often the number of horizontal pixels is implied

from context and is omitted, as in the case of 720p and 1080p, "scanning system" is identified with the letter "p" for progressive scanning or "i" for interlaced scanning, and "frame rate" is identified as number of video frames per second. For interlaced systems an alternative form of specifying number of fields per second is often used. For purposes of this disclosure, "high-definition television" is deemed to include other high-definition analog or digital video formats, including ultra high definition television.

[0021] The term "internet television" (otherwise known as Internet TV, Online Television, or Online TV) is the digital distribution of television content via the Internet. It should not be confused with Web television - short programs or videos created by a wide variety of companies and individuals, or Internet protocol television (IPTV) - an emerging internet technology standard for use by television broadcasters. Internet Television is a general term that covers the delivery of television shows and other video content over the internet by video streaming technology, typically by major traditional television broadcasters. It does not describe a technology used to deliver content (see Internet protocol television). Internet television has become very popular through services such as RTÉ Player in Ireland; BBC iPlayer, 4oD, ITV Player (also STV Player and UTV Player) and Demand Five in the United Kingdom; Hulu in the United States; Nederland 24 in the Netherlands; ABC iview and Australia Live TV in Australia; Tivibu in Turkey; and iWanTV! in the Philippines.

[0022] The term "internet protocol television" (IPTV) refers to a system through which television services are delivered using the Internet protocol suite over a packet-switched network such as the Internet, instead of being delivered through traditional terrestrial, satellite signal, and cable television formats. IPTV services may be classified into three main groups, namely live television, with or without interactivity related to the current TV show; time-shifted television: catch-up TV (replays a TV show that was broadcast hours or days ago), start-over TV (replays the current TV show from its beginning); and video on demand (VOD): browse a catalog of videos, not related to TV programming. IPTV is distinguished from Internet television by its on-going standardization process (e.g., European Telecommunications Standards Institute) and preferential deployment scenarios in subscriber-based telecommunications networks with high-speed access channels into end-user premises via set-top boxes or other customer-premises equipment.

[0023] The term "silo," as used herein, can be a logical representation of an input, source, or application. An input can be a device or devices (e.g., DVD, VCR, etc.) electrically connected to the television through a port (e.g., HDMI, video/audio inputs,

etc.) or through a network (e.g., LAN WAN, etc.). Rather than a device or devices, the input could be configured as an electrical or physical connection to one or more devices. A source, particularly a content source, can be a data service that provides content (e.g., a media center, a file system, etc.). An application can be a software service that provides a particular type of function (e.g., Live TV, Video on Demand, User Applications, photograph display, etc.). The silo, as a logical representation, can have an associated definition or property, such as a setting, feature, or other characteristic.

[0024] The term "panel," as used herein, can mean a user interface displayed in at least a portion of the display. The panel may be interactive (e.g., accepts user input) or informational (e.g., does not accept user input). A panel may be translucent whereby the panel obscures but does not mask the underlying content being displayed in the display. Panels may be provided in response to a user input from a button or remote control interface.

[0025] The term "screen," as used herein, refers to a physical structure that includes one or more hardware components that provide the device with the ability to render a user interface and/or receive user input. A screen can encompass any combination of gesture capture region, a touch sensitive display, and/or a configurable area. The device can have one or more physical screens embedded in the hardware. However a screen may also include an external peripheral device that may be attached and detached from the device. In embodiments, multiple external devices may be attached to the device. For example, another screen may be included with a remote control unit that interfaces with the Intelligent TV.

[0026] The term "media" of "multimedia," as used herein, refers to content that may assume one of a combination of different content forms. Multimedia can include one or more of, but is not limited to, text, audio, still images, animation, video, or interactivity content forms.

[0027] The term "Intelligent TV," as used herein, refers to a television configured to provide one or more intuitive user interfaces and interactions based on a unique application platform and architecture. The Intelligent TV utilizes processing resources associated with the television to integrate Internet connectivity with parallel application functionality. This integration allows a user the ability to intuitively access various sources of media and content (e.g., Internet, over-the-top content, on-demand streaming media, over-the-air broadcast media, and/or other forms of information) via the Intelligent TV in a quick and efficient manner. Although the Intelligent TV disclosed herein may

comprise one or more components of a "smart TV," it is an aspect of the Intelligent TV to provide expanded intuitive user interaction capability for navigating and executing the various features of the television. A "smart TV," sometimes referred to as a connected TV, or hybrid TV (not to be confused with IPTV, Internet TV, or with Web TV), describes a trend of integration of the Internet and Web 2.0 features into television sets and set-top boxes, as well as the technological convergence between computers and these television sets/set-top boxes. The smart TV devices have a higher focus on online interactive media, Internet TV, over-the-top content, as well as on-demand streaming media, and less focus on traditional broadcast media than traditional television sets and set-top boxes. As can be appreciated, the Intelligent TV encompasses a broader range of technology than that of the smart TV defined above.

[0028] The term "television" is a telecommunication medium, device (or set) or set of associated devices, programming, and/or transmission for transmitting and receiving moving images that can be monochrome (black-and-white) or colored, with or without accompanying sound. Different countries use one of the three main video standards for TVs, namely PAL, NTSC or SECAM. Television is most commonly used for displaying broadcast television signals. The broadcast television system is typically disseminated via radio transmissions on designated channels in the 54–890 MHz frequency band. A common television set comprises multiple internal electronic circuits, including those for receiving and decoding broadcast signals. A visual display device which lacks a tuner is properly called a video monitor, rather than a television. A television may be different from other monitors or displays based on the distance maintained between the user and the television when the user watches the media and based on the inclusion of a tuner or other electronic circuit to receive the broadcast television signal.

[0029] The term "Live TV," as used herein, refers to a television production broadcast in real-time, as events happen, in the present.

[0030] The term "standard-definition television" (SDTV) is a television system that uses a resolution that is not considered to be either high-definition television (HDTV 720p and 1080p) or enhanced-definition television (EDTV 480p). The two common SDTV signal types are 576i, with 576 interlaced lines of resolution, derived from the European-developed PAL and SECAM systems; and 480i based on the American National Television System Committee NTSC system. In the US, digital SDTV is broadcast in the same 4:3 aspect ratio as NTSC signals. However, in other parts of the world that used the PAL or SECAM analog standards, standard-definition television is now usually shown

with a 16:9 aspect ratio. Standards that support digital SDTV broadcast include DVB, ATSC and ISDB. Television signals are transmitted in digital form, and their pixels have a rectangular shape, as opposed to square pixels that are used in modern computer monitors and modern implementations of HDTV. The table below summarizes pixel aspect ratios for various kinds of SDTV video signal. Note that the actual image (be it 4:3 or 16:9) is always contained in the center 704 horizontal pixels of the digital frame, regardless of how many horizontal pixels (704 or 720) are used. In case of digital video signal having 720 horizontal pixels, only the center 704 pixels contain actual 4:3 or 16:9 image, and the 8 pixel wide stripes from either side are called nominal analogue blanking and should be discarded before displaying the image. Nominal analogue blanking should not be confused with overscan, as overscan areas are part of the actual 4:3 or 16:9 image.

[0031] The term "video on demand (VOD)," as used herein, refers to systems and processes which allow users to select and watch/listen to video or audio content on demand. VOD systems may stream content, to view the content in real time, or download the content to a storage medium for viewing at a later time.

[0032] The term "satellite positioning system receiver" refers to a wireless receiver or transceiver to receive and/or send location signals from and/or to a satellite positioning system, such as the Global Positioning System ("GPS") (US), GLONASS (Russia), Galileo positioning system (EU), Compass navigation system (China), and Regional Navigational Satellite System (India).

[0033] The term "display," as used herein, refers to at least a portion of a screen used to display the output of the television to a user. A display may be a single-screen display or a multi-screen display, referred to as a composite display. A composite display can encompass the touch sensitive display of one or more screens. A single physical screen can include multiple displays that are managed as separate logical displays. Thus, different content can be displayed on the separate displays although part of the same physical screen.

[0034] The term "displayed image," as used herein, refers to an image produced on the display. A typical displayed image is a television broadcast or menu. The displayed image may occupy all or a portion of the display.

[0035] The term "display orientation," as used herein, refers to the way in which a rectangular display is oriented by a user for viewing. The two most common types of display orientation are portrait and landscape. In landscape mode, the display is oriented such that the width of the display is greater than the height of the display (such as a 4:3

ratio, which is 4 units wide and 3 units tall, or a 16:9 ratio, which is 16 units wide and 9 units tall). Stated differently, the longer dimension of the display is oriented substantially horizontal in landscape mode while the shorter dimension of the display is oriented substantially vertical. In the portrait mode, by contrast, the display is oriented such that the width of the display is less than the height of the display. Stated differently, the shorter dimension of the display is oriented substantially horizontal in the portrait mode while the longer dimension of the display is oriented substantially vertical.

[0036] The term "module," as used herein, refers to any known or later developed hardware, software, firmware, artificial intelligence, fuzzy logic, or combination of hardware and software that is capable of performing the functionality associated with that element.

[0037] The terms "determine," "calculate" and "compute," and variations thereof, as used herein, are used interchangeably and include any type of methodology, process, mathematical operation or technique.

[0038] The term "touch screen" or "touchscreen" refer to screen that can receive user contact or other tactile input, such as a stylus. The touch screen may sense user contact in a number of different ways, such as by a change in an electrical parameter (e.g., resistance or capacitance), acoustic wave variations, infrared radiation proximity detection, light variation detection, and the like. In a resistive touch screen, for example, normally separated conductive and resistive metallic layers in the screen pass an electrical current. When a user touches the screen, the two layers make contact in the contacted location, whereby a change in electrical field is noted and the coordinates of the contacted location calculated. In a capacitive touch screen, a capacitive layer stores electrical charge, which is discharged to the user upon contact with the touch screen, causing a decrease in the charge of the capacitive layer. The decrease is measured, and the contacted location coordinates determined. In a surface acoustic wave touch screen, an acoustic wave is transmitted through the screen, and the acoustic wave is disturbed by user contact. A receiving transducer detects the user contact instance and determines the contacted location coordinates.

[0039] The term "web television" is original television content produced for broadcast via the World Wide Web. Some major distributors of web television are YouTube, MySpace, Newgrounds, Blip.tv, and Crackle.

[0040] The terms "instant message" and "instant messaging" refer to a form of real-time text communication between two or more people, typically based on typed text.

[0041] The term "internet search engine" refers to a web search engine designed to search for information on the World Wide Web and FTP servers. The search results are generally presented in a list of results often referred to as SERPS, or "search engine results pages." The information may consist of web pages, images, information and other types of files. Some search engines also mine data available in databases or open directories. Web search engines work by storing information about many web pages, which they retrieve from the html itself. These pages are retrieved by a Web crawler (sometimes also known as a spider) — an automated Web browser which follows every link on the site. The contents of each page are then analyzed to determine how it should be indexed (for example, words are extracted from the titles, headings, or special fields called meta tags). Data about web pages are stored in an index database for use in later queries. Some search engines, such as Google™, store all or part of the source page (referred to as a cache) as well as information about the web pages, whereas others, such as AltaVista™, store every word of every page they find.

[0042] The terms "online community," "e-community," or "virtual community" mean a group of people that primarily interact via a computer network, rather than face to face, for social, professional, educational or other purposes. The interaction can use a variety of media formats, including wikis, blogs, chat rooms, Internet forums, instant messaging, email, and other forms of electronic media. Many media formats are used in social software separately or in combination, including text-based chatrooms and forums that use voice, video text or avatars.

[0043] The term "remote control" refers to a component of an electronics device, most commonly a television set, DVD player and/or home theater system for operating the device wirelessly, typically from a short line-of-sight distance. Remote control normally uses infrared and/or radio frequency (RF) signaling and can include WiFi, wireless USB, Bluetooth™ connectivity, motion sensor enabled capabilities and/or voice control. A touchscreen remote control is a handheld remote control device which uses a touchscreen user interface to replace most of the hard, built-in physical buttons used in normal remote control devices.

[0044] The term "satellite TV" refers to television programming delivered by the means of communications satellites and received by an outdoor antenna, usually a parabolic reflector generally referred to as a satellite dish, and as far as household usage is concerned, a satellite receiver either in the form of an external set-top box or a satellite tuner module built into a TV set.

[0045] The term "social network service" is a service provider that builds online communities of people, who share interests and/or activities, or who are interested in exploring the interests and activities of others. Most social network services are web-based and provide a variety of ways for users to interact, such as e-mail and instant messaging services.

[0046] The term "social network" refers to a web-based social network.

[0047] The term "gesture" refers to a user action that expresses an intended idea, action, meaning, result, and/or outcome. The user action can include manipulating a device (e.g., opening or closing a device, changing a device orientation, moving a trackball or wheel, etc.), movement of a body part in relation to the device, movement of an implement or tool in relation to the device, audio inputs, etc. A gesture may be made on a device (such as on the screen) or with the device to interact with the device.

[0048] The term "gesture capture" refers to a sense or otherwise a detection of an instance and/or type of user gesture. The gesture capture can occur in one or more areas of the screen. A gesture region can be on the display, where it may be referred to as a touch sensitive display or off the display where it may be referred to as a gesture capture area.

[0049] The term "electronic address" refers to any contactable address, including a telephone number, instant message handle, e-mail address, Universal Resource Locator (URL), Universal Resource Identifier (URI), Address of Record (AOR), electronic alias in a database, like addresses, and combinations thereof.

[0050] It shall be understood that the term "means," as used herein, shall be given its broadest possible interpretation in accordance with 35 U.S.C., Section 112(f). Accordingly, a claim incorporating the term "means" shall cover all structures, materials, or acts set forth herein, and all of the equivalents thereof. Further, the structures, materials or acts and the equivalents thereof shall include all those described in the summary of the invention, brief description of the drawings, detailed description, abstract, and claims themselves.

[0051] The preceding is a simplified summary of the disclosure to provide an understanding of some aspects of the disclosure. This summary is neither an extensive nor exhaustive overview of the disclosure and its various aspects, embodiments, and/or configurations. It is intended neither to identify key or critical elements of the disclosure nor to delineate the scope of the disclosure but to present selected concepts of the disclosure in a simplified form as an introduction to the more detailed description

presented below. As will be appreciated, other aspects, embodiments, and/or configurations of the disclosure are possible utilizing, alone or in combination, one or more of the features set forth above or described in detail below.

BRIEF DESCRIPTION OF THE DRAWINGS

[0052] Fig. 1A includes a first view of an embodiment of an environment of an intelligent television;

[0053] Fig. 1B includes a second view of an embodiment of an environment of an intelligent television;

[0054] Fig. 2A includes a first view of an embodiment of an intelligent television;

[0055] Fig. 2B includes a second view of an embodiment of an intelligent television;

[0056] Fig. 2C includes a third view of an embodiment of an intelligent television;

[0057] Fig. 2D includes a fourth view of an embodiment of an intelligent television;

[0058] Fig. 3 is a block diagram of an embodiment of the hardware of an intelligent television;

[0059] Fig. 4 is a block diagram of an embodiment of the intelligent television software and/or firmware;

[0060] Fig. 5 is a second block diagram of an embodiment of the intelligent television software and/or firmware;

[0061] Fig. 6 is a third block diagram of an embodiment of the intelligent television software and/or firmware;

[0062] FIG. 7 is a plan view of an embodiment of a handheld remote control;

[0063] Fig. 8 is a side view of an embodiment of a remote control;

[0064] Fig. 9A is a bottom view of an embodiment of a remote control with a joystick in a neutral position;

[0065] Fig. 9B is a bottom view of an embodiment of a remote control with the joystick in a lower position;

[0066] Fig. 9C is a bottom view of an embodiment of a remote control with the joystick in an upper position;

[0067] Fig. 10 is a plan view of another embodiment of a handheld remote control;

[0068] Fig. 11A is a front view of an embodiment of an Intelligent TV screen;

[0069] Fig. 11B is a front view of an embodiment of an Intelligent TV screen;

[0070] Fig. 11C is a front view of an embodiment of an Intelligent TV screen;

[0071] Fig. 12 is a block diagram of an embodiment of a handheld remote control of either Fig. 7 or 10;

[0072] Fig. 13 is a block diagram of an embodiment of a content data service;

[0073] Fig. 14 is a visual representation of an embodiment of an application center;

[0074] Fig. 15a is a visual representation of an embodiment of an information panel;

[0075] Fig. 15b is a visual representation of an embodiment of an information panel that may be displayed when a user selects an icon displayed in the application center;

[0076] Fig. 16 is a visual representation of an embodiment of an information panel that may be displayed when an application is running;

[0077] Fig. 17a is a visual representation of an embodiment of a recommended applications panel;

[0078] Fig. 17b is a visual representation of the recommended applications panel of Fig. 17a that demonstrates a change of focus;

[0079] Fig. 17c is a visual representation of the recommended applications panel of Fig. 17c that demonstrates scrolling of a list of recommended applications;

[0080] Figs. 17d and 17e demonstrate a transition or change from a recommended applications panel to an information panel;

[0081] Fig. 18a is a visual representation of an embodiment of a widget panel;

[0082] Fig. 18b demonstrates expanding a widget in an embodiment of a widget panel;

[0083] Figs. 18c, 18d, and 18e demonstrate selecting and adding a new widget to an embodiment of a widget panel;

[0084] Fig. 19 is a process diagram of a method for using the application center; and

[0085] Fig. 20 is a process diagram of a method for displaying and using widgets.

[0086] In the appended figures, similar components and/or features may have the same reference label. Further, various components of the same type may be distinguished by following the reference label by a letter that distinguishes among the similar components. If only the first reference label is used in the specification, the description is applicable to any one of the similar components having the same first reference label irrespective of the second reference label.

DETAILED DESCRIPTION

[0087] Presented herein are embodiments of a device. The device can be a network-enabled telecommunications device, such as a television, an electronic visual display device, or other smart device. The device can include one or more screens, or sections of a screen, that are configured to receive and present information from a number of sources. Further, the device can receive user input in unique ways. The overall design and

functionality of the device provides for an enhanced user experience making the device more useful and more efficient.

[0088] Intelligent Television (TV) Environment:

[0089] Referring to Figs. 1A and 1B, an Intelligent TV, or device, 100 is shown. It is anticipated that the Intelligent TV 100 may be used for entertainment, business applications, social interaction, content creation and/or consumption, and to organize and control one or more other devices that are in communication with the Intelligent TV 100. As can be appreciated, the Intelligent TV can be used to enhance the user interactive experience whether at home or at work.

[0090] In some embodiments, the Intelligent TV 100 may be configured to receive and understand a variety of user and/or device inputs. For example, a user may interface with the Intelligent TV 100 via one or more physical or electrical controls, such as buttons, switches, touch sensitive screens/regions (e.g., capacitive touch, resistive touch, etc.), and/or other controls associated with the Intelligent TV 100. In some cases, the Intelligent TV 100 may include the one or more interactive controls. Additionally or alternatively, the one or more controls may be associated with a remote control. The remote control may communicate with the Intelligent TV 100 via wired and/or wireless signals. As can be appreciated, the remote control may operate via radio frequency (RF), infrared (IR), and/or a specific wireless communications protocol (e.g., Bluetooth™, Wi-Fi, etc.). In some cases, the controls, whether physical or electrical, may be configured (e.g., programmed) to suit a user's preferences.

[0091] Additionally or alternatively, smart phones, tablets, computers, laptops, netbooks, and other smart devices may be used to control the Intelligent TV 100. For example, control of the Intelligent TV 100 may be achieved via an application running on a smart device. The application may be configured to present a user with various Intelligent TV 100 controls in an intuitive user interface (UI) on a screen associated with the device 100. The screen may be a touch sensitive, or touch screen, display. Selections input by a user via the UI may be configured to control the Intelligent TV 100 by the application accessing one or more communication features associated with the smart device.

[0092] It is anticipated that the Intelligent TV 100 can receive input via various input devices including, but in no way limited to, video, audio, radio, light, tactile, and combinations thereof. Among other things, these input devices may be configured to allow the Intelligent TV 100 to see, recognize, and react to user gestures. For instance, a

user may talk to the Intelligent TV 100 in a conversational manner. The Intelligent TV 100 may hear and understand voice commands in a manner similar to a smart device's intelligent personal assistant and voice-controlled navigator application (e.g., Apple's Siri, Android's Skyvi, Robin, Iris, and other applications).

[0093] The Intelligent TV 100 may also be a communications device which can establish network connections 104 through many alternate means, including wired 108 or wireless 112 means, over cellular networks 116 to connect via cellular base antenna 142 to telephone networks operated by telephone company 146, and by using a telephone line 120 to connect to telephone networks operated by telephone company 146. These connections 104 enable the Intelligent TV 100 to access one or more communication networks. The communication networks may comprise any type of known communication medium or collection of communication media and may use any type of protocols to transport messages or signals between endpoints. The communication networks may include wired and/or wireless communication technologies. The Internet is an example of the communication network 132 that constitutes an Internet Protocol (IP) network consisting of many computers, computing networks, and other communication devices located all over the world, which are connected through many telephone systems and other means.

[0094] Other examples of the communication network 132 include, without limitation, a standard Plain Old Telephone System (POTS), an Integrated Services Digital Network (ISDN), the Public Switched Telephone Network (PSTN), a Local Area Network (LAN), a Wide Area Network (WAN), a cellular network, and any other type of packet-switched or circuit-switched network known in the art. In addition, it can be appreciated that the communication network 132 need not be limited to any one network type, and instead may be comprised of a number of different networks and/or network types.

[0095] In some embodiments, the Intelligent TV 100 may be equipped with multiple communication means. The multiple communication means may allow the Intelligent TV 100 to communicate across Local Area Networks (LANs) 124, wireless local area networks (WLANs) 128, and other networks 132. The networks may be connected in a redundant manner to ensure network access. In other words, if one connection is interrupted, the intelligent TV 100 can use an alternate communications path to reestablish and/or maintain the network connection 104. Among other things, the intelligent TV 100 may use these network connections 104 to send and receive information, interact with an electronic program guide (EPG) 136, receive software updates 140, contact customer

service 144 (e.g., to receive help or service, etc.), and/or access remotely stored digital media libraries 148. In addition, these connections can allow the Intelligent TV 100 to make phone calls, send and/or receive email messages, send and/or receive text messages (such as email and instant messages), surf the Internet using an internet search engine, post blogs by a blogging service, and connect/interact with social media sites and/or online community (e.g., Facebook™, Twitter™, LinkedIn™, Pinterest™, Google+™, MySpace™, and the like) maintained by a social network service. In combination with other components of the Intelligent TV 100 described in more detail below, these network connections 104 also enable the Intelligent TV 100 to conduct video teleconferences, electronic meetings, and other communications. The Intelligent TV 100 may capture and store images and sound, using associated cameras, microphones, and other sensors. Additionally or alternatively, the Intelligent TV 100 may create and save screen shots of media, images, and data displayed on a screen associated with the Intelligent TV 100.

[0096] Further, as shown in Fig. 1B, the Intelligent TV 100 can interact with other electronic devices 168 by either by the wired 108 and/or wireless 112 connections. As described herein, components of the Intelligent TV 100 allow the device 100 to be connected to devices 168 including, but not limited to, DVD players 168a, BluRay players 168b, portable digital media devices 168c, smart phones 168d, tablet devices 168e, personal computers 168f, external cable boxes 168g, keyboards 168h, pointing devices 168i, printers 168j, game controllers and/or game pads 168k, satellite dishes 168l, external display devices 168m, and other universal serial bus (USB), local area network (LAN), Bluetooth™, high-definition multimedia interface (HDMI) compliant devices, and/or wireless devices. When connected to an external cable box 168g or satellite dish 168l, the Intelligent TV 100 can access additional media content. Also, as further described below, the Intelligent TV 100 is capable of receiving digital and/or analog signals broadcast by TV stations. The Intelligent TV 100 can be configured as one or more of a standard-definition television, enhanced television, and high-definition television. It may operate as one or more of cable, Internet, Internet Protocol, satellite, web, and/or smart television. The Intelligent TV 100 may also be used to control the operation of, and may interface with, other smart components such as security systems 172, door/gate controllers 176, remote video cameras 180, lighting systems 184, thermostats 188, refrigerators 192, and other appliances.

[0097] Intelligent TV:

[0098] Figs. 2A-2D illustrate components of the Intelligent TV 100. In general, as shown by Fig. 2A, the Intelligent TV 100 can be supported by a removable base or stand 204 that is attached to a frame 208. The frame 208 surrounds edges of a display screen 212, leaving a front surface of the display screen 212 uncovered. The display screen 212 may comprise a Liquid Crystal Display (LCD) screen, a plasma screen, Light Emitting Diode (LED) screen, or other screen types. In embodiments, the entire front surface of the screen 212 may be touch sensitive and capable of receiving input by the user touching the front surface of the screen 212.

[0099] The Intelligent TV 100 may include integrated speakers 216 and at least one microphone 220. A first area of the frame 208 may comprise a horizontal gesture capture region 224 and second areas comprise vertical gesture capture regions 228. The gesture capture regions 224, 228 may comprise areas or regions that are capable of receiving input by recognizing gestures made by the user, and in some examples, without the need for the user to actually touch the screen 212 surface of the Intelligent TV 100. However, the gesture capture regions 224, 228 may not include pixels that can perform a display function or capability.

[0100] One or more image capture devices 232, such as a camera, can be included for capturing still and/or video images. The image capture device 232 can include or be associated with additional elements, such as a flash or other light source 236 and a range finding device 240 to assist focusing of the image capture device. In addition, the microphone 220, gesture capture regions 224, 228, image capture devices 232, and the range finding device 240 may be used by the Intelligent TV 100 to recognize individual users. Additionally or alternatively, the Intelligent TV 100 may learn and remember preferences associated with the individual users. In some embodiments, the learning and remembering (i.e., identifying and recalling stored information) may be associated with the recognition of a user.

[0101] An IR transmitter and receiver 244 may also be provided to connect the Intelligent TV 100 with a remote control device (not shown) or other IR devices. Additionally or alternatively, the remote control device may transmit wireless signals via RF, light, and/or a means other than IR. Also shown in Fig. 2A is an audio jack 248, which may be hidden behind a panel that is hinged or removable. The audio jack 248 accommodates a tip, ring, sleeve (TRS) connector, for example, to allow the user to utilize headphones, a headset, or other external audio equipment.

[0102] The Intelligent TV 100 can also include a number of buttons 252. For example, Fig. 2A illustrates the buttons 252 on the top of the Intelligent TV 100, although the buttons could be placed at other locations. As shown, the Intelligent TV 100 includes six buttons 252a-f, which can be configured for specific inputs. For example, the first button 252a may be configured as an on/off button used to control overall system power to the Intelligent TV 100. The buttons 252 may be configured to, in combination or alone, control a number of aspects of the Intelligent TV 100. Some non-limiting examples include, but are not limited to, overall system volume, brightness, the image capture device, the microphone, and initiation/termination of a video conference. Instead of separate buttons, two of the buttons may be combined into a rocker button. This rocker button arrangement may be useful in situations where the buttons are configured to control features such as volume or brightness. In some embodiments, one or more of the buttons 252 are capable of supporting different user commands. By way of example, a normal press has a duration commonly of less than about 1 second and resembles a quick input. A medium press has a duration commonly of 1 second or more but less than about 12 seconds. A long press has a duration commonly of about 12 seconds or more. The function of the buttons is normally specific to the application that is active on the Intelligent TV 100. In the video conference application for instance and depending on the particular button, a normal, medium, or long press can mean end the video conference, increase or decrease the volume, increase a rate speed associated with a response to an input, and toggle microphone mute. Depending on the particular button, a normal, medium, or long press can also control the image capture device 232 to increase zoom, decrease zoom, take a photograph, or record video.

[0103] In support of communications functions or capabilities, the Intelligent TV 100 can include one or more shared or dedicated antennae 256 and wired broadband connections 260 as shown in Fig. 2B. The antennae 256 also enable the Intelligent TV 100 to receive digital and/or analog broadcast TV channels. The wired broadband connections 260 are, for example, a Digital Subscriber Line (DSL), an optical line, an Ethernet port, an IEEE 1394 interface, or other interfaces. The Intelligent TV 100 also has a telephone line jack 262 to further provide communications capability.

[0104] In addition to the removable base 204, the Intelligent TV 100 may include hardware and mounting points 264 on a rear surface to facilitate mounting the Intelligent TV 100 to a surface, such as a wall. In one example, the Intelligent TV 100 may

incorporate at least one Video Equipment Standards Association (VESA) mounting interface for attaching the device 100 to the surface.

[0105] As shown in Fig. 2C, the Intelligent TV 100 may include docking interfaces or ports 268. The docking ports 268 may include proprietary or universal ports to support the interconnection of the Intelligent TV 100 to other devices or components, which may or may not include additional or different capabilities from those integral to the Intelligent TV 100. In addition to supporting an exchange of communication signals between the Intelligent TV 100 and a connected device or component, the docking ports 268 can support the supply of power to the connected device or component. The docking ports 268 can also comprise an intelligent element that comprises a docking module for controlling communications or other interactions between the Intelligent TV 100 and the connected device or component.

[0106] The Intelligent TV 100 also includes a number of card slots 272 and network or peripheral interface ports 276. The card slots 272 may accommodate different types of cards including subscriber identity modules (SIM), secure digital (SD) cards, MiniSD cards, flash memory cards, and other cards. Ports 276 in embodiments may include input/output (I/O) ports, such as universal serial bus (USB) ports, parallel ports, game ports, and high-definition multimedia interface (HDMI) connectors.

[0107] An audio/video (A/V) I/O module 280 can be included to provide audio to an interconnected speaker or other device, and to receive audio input from a connected microphone or other device. As an example, the audio input/output interface 280 may comprise an associated amplifier and analog to digital converter.

[0108] Hardware Features:

[0109] Fig. 3 illustrates components of a Intelligent TV 100 in accordance with embodiments of the present disclosure. In general, the Intelligent TV 100 includes a primary screen 304. Screen 304 can be a touch sensitive screen and can include different operative areas.

[0110] For example, a first operative area, within the screen 304, may comprise a display 310. In some embodiments, the display 310 may be touch sensitive. In general, the display 310 may comprise a full color, display.

[0111] A second area within the screen 304 may comprise a gesture capture region 320. The gesture capture region 320 may comprise an area or region that is outside of the display 310 area, and that is capable of receiving input, for example in the form of

gestures provided by a user. However, the gesture capture region 320 does not include pixels that can perform a display function or capability.

[0112] A third region of the screen 304 may comprise a configurable area 312. The configurable area 312 is capable of receiving input and has display or limited display capabilities. In embodiments, the configurable area 312 may present different input options to the user. For example, the configurable area 312 may display buttons or other relatable items. Moreover, the identity of displayed buttons, or whether any buttons are displayed at all within the configurable area 312 of a screen 304, may be determined from the context in which the Intelligent TV 100 is used and/or operated.

[0100] In an exemplary touch sensitive screen 304 embodiment, the touch sensitive screen 304 comprises a liquid crystal display extending across at least those regions of the touch sensitive screen 304 that are capable of providing visual output to a user, and a capacitive input matrix over those regions of the touch sensitive screen 304 that are capable of receiving input from the user.

[0101] One or more display controllers 316 may be provided for controlling the operation of the screen 304. The display controller 316 may control the operation of the touch sensitive screen 304, including input (touch sensing) and output (display) functions. The display controller 316 may also control the operation of the screen 304 and may interface with other inputs, such as infrared and/or radio input signals (e.g., door/gate controllers, alarm system components, etc.). In accordance with still other embodiments, the functions of a display controller 316 may be incorporated into other components, such as a processor 364.

[0102] The processor 364 may comprise a general purpose programmable processor or controller for executing application programming or instructions. In accordance with at least some embodiments, the processor 364 may include multiple processor cores, and/or implement multiple virtual processors. In accordance with still other embodiments, the processor 364 may include multiple physical processors. As a particular example, the processor 364 may comprise a specially configured application specific integrated circuit (ASIC) or other integrated circuit, a digital signal processor, a controller, a hardwired electronic or logic circuit, a programmable logic device or gate array, a special purpose computer, or the like. The processor 364 generally functions to run programming code or instructions implementing various functions of the Intelligent TV 100.

[0103] In support of connectivity functions or capabilities, the Intelligent TV 100 can include a module for encoding/decoding and/or compression/decompression 366 for

receiving and managing digital television information. Encoding/decoding compression/decompression module 366 enables decompression and/or decoding of analog and/or digital information dispatched by a public television chain or in a private television network and received across antenna 324, I/O module 348, wireless connectivity module 328, and/or other wireless communications module 332. The television information may be sent to screen 304 and/or attached speakers receiving analog or digital reception signals. Any encoding/decoding and compression/decompression is performable on the basis of various formats (e.g., audio, video, and data). Encrypting module 368 is in communication with encoding/decoding compression/decompression module 366 and enables the confidentiality of all the data received or transmitted by the user or supplier.

[0104] In support of communications functions or capabilities, the Intelligent TV 100 can include a wireless connectivity module 328. As examples, the wireless connectivity module 328 can comprise a GSM, CDMA, FDMA and/or analog cellular telephony transceiver capable of supporting voice, multimedia and/or data transfers over a cellular network. Alternatively or in addition, the Intelligent TV 100 can include an additional or other wireless communications module 332. As examples, the other wireless communications module 332 can comprise a Wi-Fi, Blutooth™, WiMax, infrared, or other wireless communications link. The wireless connectivity module 328 and the other wireless communications module 332 can each be associated with a shared or a dedicated antenna 324 and a shared or dedicated I/O module 348.

[0105] An input/output module 348 and associated ports may be included to support communications over wired networks or links, for example with other communication devices, server devices, and/or peripheral devices. Examples of an input/output module 348 include an Ethernet port, a Universal Serial Bus (USB) port, Thunderbolt™ or Light Peak interface, Institute of Electrical and Electronics Engineers (IEEE) 1394 port, or other interface.

[0106] An audio input/output interface/device(s) 344 can be included to provide analog audio to an interconnected speaker or other device, and to receive analog audio input from a connected microphone or other device. As an example, the audio input/output interface/device(s) 344 may comprise an associated amplifier and analog-to-digital converter. Alternatively or in addition, the Intelligent TV 100 can include an integrated audio input/output device 356 and/or an audio jack for interconnecting an external speaker or microphone. For example, an integrated speaker and an integrated microphone can be provided, to support near talk or speaker phone operations.

[0107] A port interface 352 may be included. The port interface 352 may include proprietary or universal ports to support the interconnection of the device 100 to other devices or components, such as a dock, which may or may not include additional or different capabilities from those integral to the device 100. In addition to supporting an exchange of communication signals between the device 100 and another device or component, the docking port 136 and/or port interface 352 can support the supply of power to or from the device 100. The port interface 352 also comprises an intelligent element that comprises a docking module for controlling communications or other interactions between the Intelligent TV 100 and a connected device or component. The docking module may interface with software applications that allow for the remote control of other devices or components (e.g., media centers, media players, and computer systems).

[0108] An Intelligent TV 100 may also include memory 308 for use in connection with the execution of application programming or instructions by the processor 364, and for the temporary or long term storage of program instructions and/or data. As examples, the memory 308 may comprise RAM, DRAM, SDRAM, or other solid state memory. Alternatively or in addition, data storage 314 may be provided. Like the memory 308, the data storage 314 may comprise a solid state memory device or devices. Alternatively or in addition, the data storage 314 may comprise a hard disk drive or other random access memory.

[0109] Hardware buttons 358 can be included for example for use in connection with certain control operations. One or more image capture interfaces/devices 340, such as a camera, can be included for capturing still and/or video images. Alternatively or in addition, an image capture interface/device 340 can include a scanner, code reader, or motion sensor. An image capture interface/device 340 can include or be associated with additional elements, such as a flash or other light source. The image capture interfaces/devices 340 may interface with a user ID module 350 that assists in identifying users of the Intelligent TV 100.

[0110] The Intelligent TV 100 can also include a global positioning system (GPS) receiver 336. In accordance with embodiments of the present invention, the GPS receiver 336 may further comprise a GPS module that is capable of providing absolute location information to other components of the Intelligent TV 100. As will be appreciated, other satellite-positioning system receivers can be used in lieu of or in addition to GPS.

[0111] Power can be supplied to the components of the Intelligent TV 100 from a power source and/or power control module 360. The power control module 360 can, for example, include a battery, an AC to DC converter, power control logic, and/or ports for interconnecting the Intelligent TV 100 to an external source of power.

[0112] Communication between components of the Intelligent TV 100 is provided by bus 322. Bus 322 may comprise one or more physical buses for control, addressing, and/or data transmission. Bus 322 may be parallel, serial, a hybrid thereof, or other technology.

[0113] Firmware and Software:

[0114] An embodiment of the software system components and modules 400 is shown in Fig. 4. The software system 400 may comprise one or more layers including, but not limited to, an operating system kernel 404, one or more libraries 408, an application framework 412, and one or more applications 416. The one or more layers 404-416 can communicate with each other to perform functions for the Intelligent TV 100.

[0115] An operating system (OS) kernel 404 contains the primary functions that allow the software to interact with hardware associated with the Intelligent TV 100. Kernel 404 can include a collection of software that manages the computer hardware resources and provides services for other computer programs or software code. The operating system kernel 404 is the main component of the operating system and acts as an intermediary between the applications and data processing done with the hardware components. Part of the operating system kernel 404 can include one or more device drivers 420. A device driver 420 can be any code within the operating system that helps operate or control a device or hardware attached to or associated with the Intelligent TV. The driver 420 can include code for operating video, audio, and/or other multimedia components of the Intelligent TV 100. Examples of drivers include display, camera, flash, binder (IPC), keypad, WiFi, and audio drivers.

[0116] Library 408 can contain code or other components that may be accessed and implemented during the operation of the software system 400. The library 408 may contain one or more of, but is not limited to, an operating system runtime library 424, a TV services hypertext application language (HAL) library 428, and/or a data service library 432. The OS runtime library 424 may contain the code required by the operating system kernel 404 or other operating system functions to be executed during the runtime of the software system 400. The library can include the code that is initiated during the running of the software system 400.

[0117] The TV services hypertext application language 428 can include code required by TV services either executed in the application framework 412 or an application 416. The TV services HAL library 428 is specific to the Intelligent TV 100 operations that control different functions of the Intelligent TV. The TV service HAL library 428 can also be formed from other types of application languages or embodiments of different types of code or formats for code beyond the hypertext application language.

[0118] The data services library 432 can include the one or more components or codes to implement components for the data services function. The data services function can be implemented in the application framework 412 and/or applications layer 416. An embodiment of a function of the data services and the type of components that may be included is shown in Fig. 6.

[0119] The application framework 412 can include a general abstraction for providing functionality that can be selected by one or more application 416 to provide specific application functions or software for those applications. Thus, the framework 412 can include one or more different services, or other applications, that can be accessed by the applications 416 to provide general functions across two or more applications. Such functions include, for example, management of one or more of windows or panels, surfaces, activities, content, and resources, The application framework 412 can include one or more, but is not limited to, TV services 434, TV services framework 440, TV resources 444, and user interface component 448.

[0120] The TV services framework 440 can provide an additional abstraction for different TV services. TV services framework 440 allows for the general access and function of services that are associated with the TV functionality. The TV services 436 are general services provided within the TV services framework 440 that can be accessed by applications in the applications layer 416. The TV resources 444 provide code for accessing TV resources including any types of storage, video, audio, or other functionality provided with the Intelligent TV 100. The TV resources 444, TV services 436, and TV services framework 440 provide for the different implementations of TV functionality that may occur with the Intelligent TV 100.

[0121] One or more user interface components 448 can provide general components for display of the Intelligent TV 100. The user interface components 448 might be general components that may be accessed by different applications provided in the application framework 412. The user interface components 448 may be accessed to provide for panels and silos as described in conjunction with Fig. 5.

[0122] The applications layer 416 can both contain and execute applications associated with the Intelligent TV 100. Applications layer 416 may include one or more of, but is not limited to, a live TV application 452, a video on demand application 456, a media center application 460, an application center application 464, and a user interface application 468. The live TV application 452 can provide live TV over different signal sources. For example, the live TV application, 452, can provide TV from input from cable television, over air broadcasts, from satellite services, or other types of live TV services. Live TV application 452 may then present the multimedia presentation or video and audio presentation of the live television signal over the display of the Intelligent TV 100.

[0123] The video on demand application 456 can provide for video from different storage sources. Unlike Live TV application 452, video on demand 456 provides for display of videos that are accessed from some memory source. The sources of the video on demand can be associated with users or with the Intelligent TV or some other type of service. For example, the video on demand 456 may be provided from an iTunes library stored in a cloud, from a local disc storage that contains stored video programs, or from some other source.

[0124] The media center application 460 can provide application for different types of media presentation. For example, the media center 460 can provide for displaying pictures or audio that is different from, but still accessible by the user and different from live TV or video on demand. The media center 460 allows for the access of different sources to obtain the media in the display of such media on the Intelligent TV 100.

[0125] The application center 464 allows for the provision, storage and use of applications. An application can be a game, a productivity application, or some other application generally associated with computer systems or other devices, but may be operated within the Intelligent TV. An application center 464 may obtain these applications from different sources, store them locally and then execute those types of applications for the user on the Intelligent TV 100.

[0126] User interface application 468 provides for the specific user interfaces associated with the Intelligent TV 100. These user interfaces can include the silos and panels that are described in Fig. 5. An embodiment of the user interface software 500 is shown in Fig. 5. Here the application framework 412 contains one or more code components which help control the user interface events while one or more applications in the applications layer 416 affects the user interface use for the Intelligent TV 100. The application framework 412 can include a silo transition controller 504 and/or an input event dispatcher 508.

There may be more or fewer code components in the application framework 412 than those shown in Fig. 5. The silo transition controller 504 contains the code and language that manages the transitions between one or more silos. A silo can be a vertical user interface feature on the Intelligent TV that contains information for user. The transition controller 504 can manage the changes between two silos when an event occurs in the user interface. The input event dispatcher 508 can receive user interface events that may be received from the operating system and provided to the input event dispatcher 508. These events can include selections of buttons on a remote control or on the TV or other types of user interface inputs. The input event dispatcher 508 may then send these events to a silo manager 532 or panel manager 536 depending on the type of the event. The silo transition controller 504 can interface with the silo manager 532 to affect changes in the silos.

[0127] The application framework 416 can include a user interface application 468 and/or a silo application 512. The application framework 416 can include more or fewer user interface applications as necessary to control the user interface of the Intelligent TV 100 than those shown in Fig. 5. The user interface application can include a silo manager 532, a panel manager 536, and one or more types of panels 516 through 528. The silo manager 532 manages the display and/or features of silos. The silo manager 532 can receive or send information from the silo transition controller 504 or the input event dispatcher 508 to change the silos displayed and/or to determine types of input received in the silos.

[0128] A panel manager 536 is operable to display panels in the user interface to manage transitions between those panels or to affect user interface inputs received in the panel. The panel manager 536 may thus be in communication with different user interface panels such as a global panel 516, a volume panel 520, a settings panel 524, and/or a notification panel 528. The panel manager 536 can display these types of panels depending on the inputs received from the input event dispatcher 508. The global panel 516 may include information that is associated with the home screen or top level hierarchal information for the user. A volume panel 520 may display information about an audio volume control or other settings for volume. A settings panel 524 can include information displayed about the settings of the audio or video, or other settable characteristics of the Intelligent TV 100. A notification panel 528 can provide information about notifications to a user. These notifications can be associated with information, such as, video on demand displays, favorites, currently provided programs, or other information. Notifications can be associated with the media or with some type of setting,

or operation or the Intelligent TV 100. The panel manager 536 may be in communication with the panel controller 552 of the silo application 512.

[0129] The panel controller 552 may operate to control portions of the panels of the types described previously. Thus, the panel controller 552 may be in communication with a top panel application 540, an application panel 544, and/or bottom panel 548. These types of panels may be differently displayed in the user interface of the Intelligent TV 100. The panel control thus may be based on the configuration of the system or the type of display being used currently, put the types of panels 516-528 into a certain display orientation governed by the top panel application 540, application panel 544, or bottom panel application 548.

[0130] An embodiment of the data service 432 and the operation of the data management is shown in Fig. 6. The data management 600 can include one or more code components that are associated with different types of data. For example, there may be code components within the data service 432 that execute and are associated with video on demand, the electronic program guide, or media data. There may be more or fewer types of data service 432 components than those shown in Fig. 6. Each of the different types of data may include a data model 604-612. The data models govern what information is to be stored and how that information will be stored by the data service. Thus, the data model can govern regardless of where the data comes from, how the data will be received or managed within the Intelligent TV system. Thus, the data model 604, 608, and/or 612, can provide a translation ability or affect the ability to translate data from one form to another to be used by the Intelligent TV 100.

[0131] The different types of data services (video on demand, electronic programming guide, media) each have a data subservice 620, 624, and/or 628 that is in communication with one or more internal and/or external content providers 616. The data subservices 620, 624, and 628 that communicate with the content providers 616 to obtain data that may then be stored in databases 632, 636, and 640. The subservices 620, 624, and 628 may communicate with and initiate or enable one or more source plug-ins 644, 648, and 652 to communicate with the content provider. For each content provider 616, there may be a different source plug-in 644, 648, and 652. Thus, if there is more than one source of content for the data, each of the data subservice 620, 624, and 628 may determine and then enable or initiate a different source plug-in 644, 648, and/or 652. The content providers 616 may also provide information to a resource arbitrator 656 and/or thumbnail cache manager 660. The resource arbitrator 656 may operate to communicate with resources

664 that are external to the data service 432. Thus, the resource arbitrator 656 may communicate with cloud based storage, network based storage, or other types of external storage in the resources 664. This information may then be provided through the content provider module 616 to the data subservices 620, 624, 628. Likewise, a thumbnail cache manager may obtain thumbnail information from one of the data subservices 620, 624, 628 and store that information in the thumbnail database 668. Further the thumbnail cache manager 660 may extract or retrieve that information from the thumbnails database 668 to provide to one of the data subservices 620, 624, 628.

[0132] An exemplary content aggregation architecture 1300 is shown in Fig. 13. The architecture can include a user interface and content aggregation layers 1304 and 1308. The user interface layer 1304 may include a TV application 1312, media player 1316, and application(s) 1320. The TV application 1312 enables the viewer to view channels received via an appropriate transmission medium, such as cable, satellite, and/or the Internet. The media player 1316 views other types of media received via an appropriate transmission medium, such as the Internet. The application(s) 1320 include other TV-related (pre-installed) applications, such as content viewing, content searching, device viewing, and setup algorithms, and coordinates with the media player 1316 to provide information to the viewer.

[0133] The content source layer 1308 includes, as data services, a content source service 1328, a content aggregation service 1332 and a content presentation service 1336. The content source service 1328 can manage content source investigators, including local and/or network file system(s), digital network device manager (which discovers handheld and non-handheld devices (e.g., digital media servers, players, renderers, controllers, printers, uploaders, downloaders, network connectivity functions, and interoperability units) by known techniques, such as a multicast universal plug and play or UPnP discovery techniques, and, for each discovered device, retrieves, parses, and encodes device descriptors, notifies the content source service of the newly discovered device, and provides information, such as an index, on previously discovered devices), Internet Protocol Television or IPTV, digital television or DTV (including high definition and enhanced TV), third party services (such as those referenced above), and applications (such as Android applications).

[0134] Content source investigators can track content sources and are typically configured as binaries. The content source service 1328 starts content source investigators and maintains open and persistent channels for communications. The communications

include query or command and response pairs. The content aggregation service 1332 can manage content metadata fetchers, such as for video, audio, and/or picture metadata. The content presentation service 1336 may provide interfaces to the content index, such as an Android application interface and digital device interfaces.

[0135] The content source service 1328 can send and receive communications 1344 to and from the content aggregation service 1332. The communications can include notifications regarding new and removed digital devices and/or content and search queries and results. The content aggregation service 1332 can send and receive communications 1348 to and from the content presentation service 1336 including device and/or content lookup notifications, content-of-interest advisories and notifications, and search queries and results.

[0136] When a search is performed, particularly when the user is searching or browsing content, a user request may be received from the user interface layer 1300, by the content presentation service 1336, which responsively opens a socket and sends the request to the content aggregation service 1332. The content aggregation service 1332 first returns results from the local database 1340. The local database 1340 includes an index or data model and indexed metadata. The content source service 1328 further issues search and browse requests for all content source investigators and other data management systems. The results are forwarded to the content aggregation service 1332, which updates the database 1340 to reflect the further search results and provides the original content aggregation database search results and the data updates, reflecting the additional content source service search results, over the previously opened socket to the content presentation service 1336. The content presentation service 1336 then provides the results to one or more components in the user interface layer 1300 for presentation to the viewer. When the search session is over (e.g., the search session is terminated by the user or by an action associated with user), the user interface layer 1300 disconnects the socket. As shown, media can be provided directly by the content aggregation service 1332 to the media player 1316 for presentation to the user.

[0137] Remote Control:

[0138] A handheld remote control can be provided to enable user interaction with the Intelligent TV 100. An exemplary handheld remote control is shown in Figs. 7-9. The remote control 700 can include one or more of, but is not limited to, top, side and bottom housings 704, 708, and 712, an (on/off) power button 716, an input source button 720 (to select input source such as Live TV, video on demand, media center, application center,

high definition multimedia interface or HDMI, component or COMP, audio/Video or A/V, digital or analog television or DTV/ATV, and video graphics array (VGA)), a (volume) mute button 724, a Live TV button 728 (to activate or select the Live TV silo), a video on demand (VOD) button 732 (to activate or select the video on demand silo), a media center button 736 (to activate or select the media center application or silo, which access various types of media such as music, TV programming, videos, and the like), an application center button 740 (to activate or select the application center application or silo), a global panel button 744, an application panel button 748, a back button 752 (to select a prior user operation or Intelligent TV state and/or navigate up a hierarchy of any displayed image or object(s) (in which case the back button 752 does not navigate within application panels or across application silos), a play button 756 (to play or pause media), a D-pad 760 (which includes north, east, west, and south directional arrows to navigate among displayed images and/or move between levels of an application's or object's hierarchy such as application view navigation, panel navigation, and collection navigation), an OK (or select) button 764 (to select a highlighted displayed image (such as displayed speed control, rewind, forward, play, and pause objects and/or objects on menu bar or in a menu box) and/or navigate down a hierarchy of any displayed image or object(s)), a rocker-type volume-up and volume-down button 768 (to adjust the volume), a menu/guide button 772 (to select for display a menu or guide of programming), a 0-9 (number) button 776 (to display a number pad on the TV screen), a settings button 780 (which launches an application to access current and change TV settings (such as channel settings and settings used to adjust picture and sound effects (e.g., image mode (e.g., standard, playground, game, cinema, concert, and studio), brightness, contrast, saturation, color temperature, energy savings, 3D noise reduction, hue, sharpness, zoom mode (e.g., full screen, standard, smart zoom, and dot-to-dot), picture position, 3D mode, for picture, and sound retrieval system or SRS TruSurround, sound mode (e.g., standard, live 1, live 2, theatre, music, speech, user equalizer mode, Left/Right speaker balance, auto volume control, Sony/Philips Interconnect Format or S/PDIF (off, auto, pulse code modulation or PCM) for sound) and system settings (such as system (e.g., selected language for graphical user interface, user geographical and/or geopolitical location information, input method, area settings, and sleep time), network (e.g., WiFi, WiFi hotspot, WiFi direct, Point-to-Point Protocol over Ethernet or PPPoE (asymmetric digital subscriber line or ADSL), Ethernet) settings (e.g., enabled and disabled and selected and non-selected) and information (e.g., network information (e.g., electronic address such as Internet Protocol or IP address,

subnet mask, gateway, domain name server information, domain name, Media Access Control or MAC address, service set identification or SSID, security information, and password information) and inline status), manage applications (e.g., currently installed applications, currently executing applications, and internal and external computer readable medium usage), and view user information regarding the Intelligent TV 100)), a rocker-type channel-up and channel-down button 784 (to increment or decrement the selected channel), and first, second, third and fourth hotkeys 788, 792, 794, and 796, and/or a moveable joystick 900 on a bottom of the remote control 700. The first, second, third, and fourth hotkeys are generally assigned different colors, which color indexing is depicted as visual indicia on a selected panel to show the currently assigned function, if any, for each hotkey. As can be seen, the actuator layout can provide a highly efficient, satisfactory, and easily usable experience to the end user.

[0139] Unlike the functional associations and functions of many of the actuators, those of some of the actuators are not readily apparent. A number of examples will now be discussed by way of illustration.

[0140] The media center button 736, when selected, can provide information regarding music, videos, photographs, collections or groupings of music, videos, and/or photographs, and internal and external computational devices (such as personal computers, laptops, tablet computers, wireless phones, removable computer readable media, and the like), which can be grouped in a selected manner (such as favorites, most recently viewed, most watched or viewed, and most recently added). The information can includes previews (which can include selected portions of the media content, duration, file size, date created, date last watched, times watched or viewed, and audio and/or video format information).

[0141] The application center button 740, when selected, may provide information regarding pre-installed and downloaded applications. Unlike downloaded applications, pre-installed applications cannot be removed by the user or manually updated. Exemplary pre-installed applications include web browser, settings control, and content search algorithms. By way of illustration, the application center button 740 can provide a scrollable graphical grid of icons (each icon being associated with an application) currently available in the application center.

[0142] The global panel button 744, when selected, can provide the user, via one or more panels or windows, with access to one or more of, but not limited to, silos, notifications, a web browser, system settings, and/or information associated therewith.

For example, the global panel button 744 can enable the user to determine what external devices are currently connected to and/or disconnected from the Intelligent TV 100, determine what inputs (e.g., HDMI ports) are currently available for connecting to external devices, determine a connection and/or operational status of a selected external device and/or network (e.g., WiFi connected, Ethernet connected, and offline), assign a custom (or user selected) name to each input source, determine what content is currently being offered on Live TV, on demand, the media center, and/or the application center, access vendor messages and notifications to the user (e.g., system and/or application updates are available), activate the Internet browser, and/or access shortcuts on a displayed shortcut bar to more frequently used and desired applications. Common shortcuts are Internet browser (e.g., Internet search engine), system settings, and notifications. The common types of panels are for information (which is typically information related to a currently displayed image and/or content (e.g., title, date/time, audio/visual indicator, rating, and genre), browse requests, and/or search requests (such as search term field)). Each of the panel types may include a panel navigation bar, detailed information or relevant content to the panel function, operation and/or purpose, and a hotkey bar (defining currently enabled functional associations of hotkeys).

[0143] The application panel button 748, when selected, can display an application window or panel. One application panel may be an information panel regarding a selected (pre-installed or previously downloaded) application icon. The information panel can one or more of identify the selected application, provide a description of the functionality (including application developer and/or vendor, version, release, and/or last update date and a category or type of application based on the application's functionality) and user ratings and/or degree of other user downloading of the application (e.g., a star rating assigned based on one or more of the foregoing inputs), provide the option to launch, remove, update, and add to favorites the identified application, and provide a listing of selectable links of other (not yet downloaded) recommended applications that provide similar functionality to the identified application. The latter listing can, in turn, provide a description of the functionality (including application developer and/or vendor, version, release, and/or last update date and a category or type of application based on the application's functionality) and user ratings and/or degree of other user downloading of the application (e.g., a star rating assigned based on one or more of the foregoing inputs).

[0144] The functions of the first, second, third, and fourth hotkeys 788, 792, 794, and 796 can change depending on system state, context, and/or, within a selected screen and/or

panel, based on a content or currently selected portion of (or relative cursor position on) the screen. Commonly, a currently assigned function of any of the first, second, third, and fourth hotkeys 788, 792, 794, and 796 depends on a currently accessed silo and/or panel (with which the user is currently interacting within the silo). In other words, a first function of one of the first, second, third, and fourth hotkeys 788, 792, 794, and 796 is activated by the respective hotkey in a first system state while a different second function is activated by the respective hotkey in a different second system state. In another example, a third function of one of the first, second, third, and fourth hotkeys 788, 792, 794, and 796 is activated by the respective hotkey when a user focus (or currently selected cursor position or screen portion) is at a first screen position while a different fourth function is activated by the respective hotkey when a user focus (or currently selected cursor position or screen portion) is at a different second screen position. The first screen position can, for instance, be within an icon while the second screen position is outside of the icon. Hotkey functionality that could be enabled when in the first screen position may be "configure" and "remove" and disabled is "add," and, when in the second position hotkey functionality enabled can be "add" and disabled is "configure" and "remove." Generally, the states of hotkeys can include normal (for enabled actions or functions), disabled (when an action or function is temporarily disabled), pressed (when selected by a user to command an action or function to be performed), and unavailable (when no association between the hotkey and an action or function is currently available). While examples of hotkey functions are discussed below, it is to be understood that these are not intended to be exhaustive or limiting examples.

[0145] The first hotkey 788, when selected in a first system state, can enable the user to assign, change, or edit a name of an input source. It is typically enabled only when the input source of HDMI, Comp/YPbPr (e.g., component video cables), video output, and VGA is in focus. When selected in a second system state, the first hotkey 788 can return the user to a top of a scrollable collection of objects, such as application icons.

[0146] The second hotkey 792 may show all or less. In other words, the hotkey 792 can allow the user to show all inputs, including the unconnected/undetected ones and to hide the unconnected/undetected inputs, e.g., to expand and collapse the silo/input list. Each input source can have one of two states, namely connected/detected and unconnected/undetected. Some input sources, including Live TV, video on demand, media center, and application center are always connected/detected.

[0147] The moveable joystick 900 on the bottom of the remote control 700, when manipulated, can cause a displayed image on the Intelligent TV 100 screen to be displaced a proportional amount. In other words, the displayed image is displaced substantially simultaneously with displacement of the joystick 900 within the joystick aperture 904 in the bottom housing 712 of the remote control. As shown in Figs. 9B-C, the joystick 900 moves or slides between forward and reverse positions. Releasing the joystick 900 causes the joystick 900 to return to the center position of Fig. 9A, and the window to move or slide upwardly (when the joystick is released from the joystick position of Fig. 9B) or downwardly (when the joystick is released from the joystick position of Fig. 9C) until it disappears from view as shown in Fig. 11A. The effect on the screen of the Intelligent TV 100 is shown in Figs. 11A-C. In Fig. 11A, video content, such as TV programming, a video, movie, and the like, is being displayed by front surface of the screen 212. In Fig, 11B, the joystick 900 is moved or slid to the upper position of Fig. 9B, and a drop down window or panel 1100 moves or slides down (at the substantially the same rate of joystick 900 movement) at the top of the screen 212. In Fig, 11C, the joystick 900 is moved or slid to the lower position of Fig. 9C, and a drop up window or panel 1100 moves or slides up (at the substantially the same rate of joystick 900 movement) at the bottom of the screen 212. The window 1100 partially covers the video content appearing on the remainder of the screen 212 and/or causes a portion of the screen 212 displaying video content to move and/or compress up or down the height of the window 1100.

[0148] The window 1100 can include one or more of information (which is typically information related to a currently displayed image and/or content (e.g., panel navigation bar, detailed information (e.g., title, date/time, audio/visual indicator, rating, and genre), and hotkey bar (defining current functional associations of hotkeys)), browse requests, and/or search requests. Commonly, the window 1100 includes suitable information about the content (such as name, duration, and/or remaining viewing duration of content), settings information, TV or system control information, application (activation) icons (such as for pre-installed and/or downloaded applications such as application center, media center and Web browser), and/or information about input source(s), When the joystick 900 is in either the forward or reverse position, the user can select an actuator on the front of the remote control, such as the OK button 764, and be taken, by displayed images on the screen 212, to another location in the user interface, such as a desktop. This process can be done in a nonintrusive manner and without affecting the flow of content

that is pushed up or down. The joystick 900 could be moved, additionally or differently, from side-to-side to cause the window to appear at the left or right edge of the screen 212.

[0149] An alternative actuator configuration is shown in Fig. 10. The actuators are substantially the same as those of Figs. 7-9 except that the social network button 1000, when selected, can automatically select content and publish, via a social network service or other social media, the content to a social network or online community. User or viewer comments and/or other messages can be included in the outbound message. For example, all or one or frames or portions of media content (such as a video, music, a photograph, a picture, or text) can be provided automatically to a predetermined or selected group of people via Linked-In™, Myspace™, Twitter™, YouTube™, DailyMotion™, Facebook™, Google+™ or Second Life™. The user, upon activating the button 1000 could, in response, select a social forum or media upon which the selected content (which is the content displayed to the user when the social network button 1000 is activated) is to be posted and/or a predetermined group within that social media to which the content is to be posted. Alternatively, these selections could be preconfigured or preselected by the user.

[0150] The social network button can also be used to "turn up" or "turn down" a social volume visualization. The Intelligent TV 100 can create dynamically a visualization of aggregated connections (and inbound and/or outbound messages) from a variety of social networks. The aggregation (and inbound and outbound messages) can be depicted graphically on the screen as a volume of connections to influence the viewer user. With a social volume visualization, selected contents of each linked social network profile of a social contact (and inbound and/or outbound messages from or to the linked social network contact and/or current activity of the social contact (such as watching the same programming or content the viewer is currently watching) can be presented in a separate tile (or visually displayed object). The size of the tile can be related to any number of criteria, including a relationship of the linked social contact (e.g., a relative degree of importance or type of relationship can determine the relative size of the tile, a degree of influence of the linked social contact to the current viewer, a geographic proximity of the linked social contact to the current viewer, a degree to which the currently provided media content is of interest to both the viewer and linked social contact (e.g., both parties enjoy war movies, murder mysteries, musicals, comedies, and the like), an assigned ranking of the linked viewer by the viewer, a type of social network type linking the viewer with the linked social contact, a current activity of the social network contact (e.g., currently

watching the same content that the viewer is currently watching), a current online or offline status of the linked social contact, and a social network grouping type or category to which both the viewer and linked social contact belong (e.g., work contact, best friend, family member, etc.).

[0151] The viewer can designate a portion of the screen to depict the social network aggregation. By turning the social volume up (+) or down (-), the viewer can increase the size and/or numbers of linked contact tiles provided to the viewer. In other words, by increasing the social volume the viewer can view, access, and/or push more social content from those of his or her social networks associated with him or her in a memory of the Intelligent TV. By decreasing the social volume, the viewer can view, access, and/or push less social content from his or her associated social networks. By selecting the mute button 724, the viewer can stop or pause any interactivity with his or her associated social networks (e.g., inbound or outbound messages). Social volume and/or mute can be separated into two (or more) volume settings for outbound and inbound social network activity. By way of illustration, a first volume setting, control, and/or button can control the volume for outbound social network activity (e.g., outbound social messages) while a second (different) volume setting, control, and/or button can control the volume for inbound social network activity (e.g., inbound social messages). By way of further illustration, a first mute setting, control, and/or button can stop or pause outbound social network activity (e.g., outbound social messages) while a second (different) mute setting, control, and/or button can stop or pause inbound social network activity (e.g., inbound social messages).

[0152] A functional block diagram of the remote control is shown in Fig. 12. The remote control 700 includes a controller 1208 to control and supervise remote control operations, optional wireless (RF) transceiver 1224 and antenna 1244 to send and receive wireless signals to and from the Intelligent TV 100 and other external components, optional infrared emitter 1228 to emit infrared signals to the Intelligent TV 100, optional light emitting diode or LED driver 1232 to control LED operation to provide video-enabled feedback to the user, actuators 1220 (including the various buttons and other actuators discussed above in connection with Figs. 7 and 10), and joystick 900, all interconnected via a bus 1248. An on board power source 1200 and power management module 1204 provide power to each of these components via power circuitry 1240. The infrared emitter 1228 and receiver (not shown) on the Intelligent TV system 100 can be used to determine a displayed object illuminated by the infrared signal and therefore adjust

the displayed image, for example to indicate a focus of the user (e.g., illuminate a displayed object or show cursor position relative to displayed objects on the screen) and to determine and activate a desired command of the user. This can be done by tracking a position of the remote control in relation to infrared tracking reference points (e.g., a sensor bar or infrared LED's) positioned on or adjacent to the screen of the Intelligent TV 100. Motion tracking can further be augmented using position information received from a multi-axis gyroscope and/or accelerometer on board the remote control (not shown).

[0153] Referring now to Fig. 14, an exemplary view of an application center 464 silo in accordance with embodiments of the present disclosure is illustrated. The application center 464 may dynamically arrange and display one or more application icons 1404 based on application usage. Of course, this view is just one example of a possible arrangement of application icons 1404 and the panel manager 536 may arrange and display application icons 1404 in different orders and groupings. The panel manager 536 may display the one or more application icons 1404 in the application center 464 as icons, text, shortcuts, or any combination thereof. An application can be a game, a productivity application, or some other application generally associated with computer systems or other devices, but may be accessed and operated within the Intelligent TV 100.

[0154] The application center 464 may provide access to contextually relevant functionality based on recently used applications, frequently used applications, and recently added applications and widgets. The application center 464 may obtain applications from different sources, store them locally and then execute the applications for the user on the Intelligent TV 100. The application center 464 allows for the provision, storage and use of pre-installed and downloaded applications and widgets.

[0155] The user may activate the application center 464 through various commands, such as by touching the touch sensitive display screen 212, by speaking a voice command, by providing a gesture using the gesture capture regions 224, 228, by selecting the application center button 740 or the input source button 720 on the remote control 700, by operating a pointing device 168i, and/or the like. The input event dispatcher 508 can receive the request from the user to activate the application center 464 and, as discussed above, the input event dispatcher may then send the activation request to the panel manager 536 to display the application center 464 on the screen of the Intelligent TV 100.

[0156] When a user activates the application center 464, the user interface application 468 may retrieve application usage information from a storage medium, such as memory 308 and data storage 312. The application usage information may include, for example a

last used application, a second last used application, a most used application, a second most used application, a newest application, and a second newest application. The user interface application 468 may then pass the application usage information to the application panel 544. The retrieved application usage information may be used by the application panel 544 to determine which application icons 1404 to display in the application center 464. As shown in Fig. 14, the application center 464 may display a "last used" icon 1404a, a "second last used" icon 1404b, a "most used" icon 1404c, a "second most used" icon 1404d, a "newest" icon 1404e, and a "second newest" icon 1404f. Of course, the application center 464 may display more or fewer application icons 1404a-1404f and may display an icon for widgets 1404g. The application icons 1404 displayed in the application center 464 are dynamic and can change each time the user activates the application center 464 as the application usage information changes as different applications are used, as new applications are added, and/or as applications are removed. The location and arrangement of the icons provides the ability to quickly launch applications without the need to navigate to a different panel view. In one implementation, the location of the widget icon 1404g may be fixed and may always appear in the same location.

[0157] As discussed above in connection with Figs. 2A-2D, the Intelligent TV 100 may learn and remember preferences associated with individual users and may recognize individual users. When the Intelligent TV 100 recognizes an individual user, the application usage information may be associated with the recognized individual user to customize the applications presented in the application center 464.

[0158] The panel manager 536 should not display an application icon 1404 more than once in the application center 464. Said another way, the criteria used to fill the application positions is dynamically calculated each time the application center is activated. If an individual application is listed twice in the application usage information retrieved from the memory 308 and/or data storage 312, then the application panel 544 may display the corresponding application icon 1404 in a single location of the application center 464 based on the following exemplary order of preference: last used application 1404a, second last used application 1404b, most used application 1404c, second most used application 1404d, newest application 1404e, and second newest application 1404f. For example, assume the application named "Bubble Birds" was returned by the application panel 544 as both the last used application and the most used application. Based on the exemplary order of preference described above, the application panel 544 may display the

application icon for "Bubble Birds" 1408 in the last used application location 1404a of the application panel 464. The application panel 544 may then display the second most used application in the most used application 1404c location. The second most used application can also only be displayed once, therefore, application panel 544 may display an icon for the third most used application in the second most used application location 1404d. Of course, this order of preference is only one example and the order of preference may be changed in different embodiments.

[0159] A user can navigate focus to an application icon 1404 using the D-pad 760 by speaking a voice command, by providing a gesture using the gesture capture regions 224, 228, by operating a pointing device 168i, and/or the like. In the example of Fig. 14, the last used icon 1404a has focus, as indicated by the rectangle 1412. Although illustrated as a rectangle, other methods may be used to indicate focus 1412. For example, instead of a rectangle, indicator 1412 may comprise adjusting the background of an icon and text such that the color, shade, or hue is different. Alternatively, or in addition, indicator 1412 may comprise enlarging or magnifying the icon and text, or causing the icon and text to change color, be highlighted, or blink.

[0160] When an application icon 1404 has focus 1412, the user can launch the application by pressing the OK or select button 764 on the remote control 700. The panel manager 536 can then dismiss or hide the application center 464 and may launch the application represented by the application icon 1404 with focus to provide the user the associated content or functionality. In the example of Fig. 14, because the icon for "Bubble Birds" 1408 has focus 1412, if the user presses the select button 764, the panel manager 536 may launch the Bubble Birds application.

[0161] In some embodiments, the panel manager 536 may automatically dismiss or hide the application center 464 if the application center 464 is not used within a certain amount of time. For example, the Intelligent TV 100 may establish a default time of 5 seconds and when the default time expires, the panel manager 536 can remove the application center 464 from the display 212 if there is no activity by the user. The user can set a time limit in the settings panel 524 after which the panel manager 536 may remove the application center 464 if the application center has not been used by the user. For example, the user can set the application center 464 to automatically dismiss after 2 seconds, 10 seconds, or 30 seconds of no activity or any amount of time delay desired. The user can also set the automatic dismiss delay time to "never" so that the application center 464 does not automatically dismiss due to lack of activity.

[0162] The panel manager 536 may display the application center 464 without disrupting the content view area 1416. That is, the application center 464 may be displayed by the panel manager 536 in such a manner as to provide a user the ability to view the active content (such as Live TV, a running application, etc.) displayed in content view area 1416. For example, the panel manager 536 may display the application center 464 as translucent in nature such that the content displayed in the content view area 1416 is displayed (i.e. still viewable to a user) behind the application center 464. In some embodiments, the panel manager 536 may compress the active content area 1416 when the panel manager displays the application center 464 so that the active content area remains visible. An example of a compressed active content area 1416 is illustrated in Fig. 17a where recommended applications panel (discussed below) is displayed.

[0163] The intelligent TV 100 may further include an information panel 1500 as shown in Fig. 15a. The information panel 1500 can provide the user with more information about an application represented by an application icon 1404 selected by the user. The user can activate the information panel 1500 by moving focus to an application icon 1404 displayed in the application center 464 and then selecting the application icon 1404 with focus.

[0164] The information panel 1500 may comprise panel elements such as a navigation bar 1504, an area to display application information 1508, a list 1512 of one or more recommended applications, one or more action buttons 1516, and one or more hot keys 1520.

[0165] The information panel 1500 may display a navigation bar 1504 such that the navigation pattern and content remain consistent across all panels. That is, the navigation bar 1504 may include the same or similar elements as in other panels (discussed above in connection with Fig. 5) such that an ease of navigation may be maintained. For example, the information panel 1500 navigation bar 1504 may include fixed tabs corresponding to navigable menus for Information 1504a and Recommended Applications 1504b. Although only two tabs are illustrated in the example of Fig. 15a, additional or fewer tabs may be displayed in the information panel 1500. In the example of Fig. 15a, the Information 1504a fixed tab has focus, indicated in this example by line 1412.

[0166] The information panel 1500 may display a "Launch" button 1516a to launch the application, a "Favorites" button 1516b to add or remove the application to the user's favorites list, an "Update" button 1516c to check for updates for an application, and a "Remove" button 1516d to un-install the application. The panel manager 536 may display different action buttons 1516 depending on the application selected in the application

center 464 by the user. Depending on the application selected by the user (or currently running), the panel manager 536 may disable some of the buttons 1516a-1516d. For example, in some embodiments the panel manager 536 may show or enable the "Update" button 1516c if an update for the application is available.

[0167] The information panel 1500 may display application information 1508 based on the application selected by the user in the application center 464 or that is running when the user activates the information center 1500. Application information 1508 may comprise information related to or associated with the application such as one or more of: a name, a thumbnail, a description, a version, a revision date, a developer, a category name, a user rating, a content rating, a video format, an audio format, system requirements, memory requirements, a cost, and/or the like. Of course, the panel manager 536 may retrieve additional application information 1508 and may display additional application information 1508 in the information panel 1500. In an embodiment, if the application thumbnail is not available, then an application icon may be used.

[0168] The list of recommended applications 1512 may provide application information 1508 for one or more recommended applications 1512. Recommended applications 1512 may comprise applications, if any, recommended based on a currently running application or the application icon 1404 selected by the user in the application center 464. For example, the information panel 1500 may display a first list of one or more recommended applications 1512 based on: applications recently viewed or used; applications recently purchased; content currently being viewed in the active content area 1416; and/or recommendations made by one or more application stores (such as the Apple App Store, Hisense, Google Play, the Amazon Appstore, etc.). The recommended applications 1512 may include application information 1508 as described above, including a cost to purchase or rent a recommended application.

[0169] The panel manager may position hot keys 1520 at the bottom of the information panel 1500. The function of the hot keys may be context sensitive and may vary depending on the application selected in the application center 464. Some hot keys may be used to navigate while others may be action based – for example, based on shortcuts such as marking an application as a favorite. In the example of Fig. 15a, the hot key "Favorite" 1520a is active and can be used to add the application with focus to a favorites list. If an application is already in the favorites list, selecting the Favorite hot key will remove the application from the favorites list.

[0170] Fig. 15b depicts an example of the information panel 1500 that may be displayed when the user selects the "Bubble Birds" icon 1408 of Fig. 14. The information panel 1500 may display application information 1508 including a "Bubble Birds" thumbnail 1508a, an application name 1508b, an application description 1508c, an application developer 1508d, a version number 1508e, a date 1508f the application was updated, an application category 1508g, a content rating 1508h, a cost 1508i to purchase or rent an application, and a user rating 1508j. The Favorite 1520a hot key is active.

[0171] When an application is running 1600 in the content view area 1416, the user may activate the information panel 1500 to obtain application information 1508 about the running application 1600, as illustrated in Fig. 16. In the example of Fig. 16, the "Bubble Birds" application 1600 was running when the user activated the information panel 1500. A list 1512 of recommended applications is included in the information panel 1500. In this embodiment, the "Add to Favorites" 1516b button is enabled, indicating that the "Bubble Birds" application 1600 has not previously been marked as a favorite application.

[0172] In accordance with some embodiments of the present disclosure, when the information panel 1500 is displayed, a user may request a second list of one or more recommended applications 1512 by moving focus to the "recommended" fixed tab region 1504b, by navigating right using the D-Pad 760, by navigating to the bottom of the first list of recommended applications 1512 and then navigating down with the D-Pad 760, or by voice command or other means. When the user requests a second list of one or more recommended applications 1512, the panel manager 536 may hide the information panel 1500 and replace the information panel 1500 with a recommended application panel 1700. One example of the recommended application panel 1700 is illustrated in Fig. 17a. Application information 1508, as described above, may be provided about applications in a new list of recommended applications. The panel manager 536 may arrange the recommended application panel 1700 similar to the information panel 1500. For example, the recommended application panel 1700 may have a navigation bar 1504 with fixed tabs corresponding to navigable menus for Information 1504a and Recommended Applications 1504b. In the example of Fig. 17a, the Recommended Applications 1504b fixed tab is underlined to indicate focus 1412. Each recommended application may include application information 1508, such as a thumbnail 1508a, an application name 1508b, an application description 1508c, an application developer 1508d, a version number 1508e, a user rating 1508j, a content rating 1508h, and a format 1508k. The panel manager 536

may display more application information 1508 in some embodiments of the recommended application panel 1700.

[0173] The user can navigate focus 1412 up or down through the list of recommended applications. If the user navigates to the bottom of the list of recommended applications, the list may continue to scroll as the user navigates down and the panel manager may display more recommend applications. For example, in Fig. 17b, focus 1412 has been navigated to the recommended application "Wild People" 1512a. If the user continues to navigate down, the list can scroll and the panel manager 536 may add a new recommended applications to the list. For example, as illustrated in the example of Fig. 17c, a new application 1512b has been added to the list and the panel manager 536 has shifted the application "Wild People" 1512a up. However, one of skill in the art would recognize that there can be a variety of other ways that the recommended application panel 1700 can display lists of recommended applications 1512.

[0174] A user can launch or purchase a recommended application by navigating focus 1412 to and selecting the desired recommended application. When a desired recommended application is selected, the panel manager 536 may dismiss the recommended application panel 1700 and connect to an application store so that the user may purchase or rent the selected application. The user can also exit the recommended application panel 1700 and return to the information panel 1500 by navigating focus to the "Information" 1504a fixed tab, by navigating left using the D-pad 764, by touching the touch sensitive display screen 212, by speaking a voice command, by providing a gesture using the gesture capture regions 224, 228, by operating a pointing device 168i, and/or the like.

[0175] The user can navigate focus to one of the recommended applications and activate the information panel 1500 to get more application information 1508 about a selected application 1600. For example, in Fig. 17d, focus 1412 has been navigated to the recommended application "Movie Trivia" 1512c. The user can now activate the information panel 1500, as illustrated in Fig. 17e, which may display additional application information 1508 about the "Movie Trivia" 1512c application and may display a new list of recommended applications. The information panel 1500 in the example illustrated in Fig. 17e displays the cost to rent or buy 1508i the "Movie Trivia" application 1512c.

[0176] Returning to Fig. 14, if a user navigates focus to and selects the widgets icon 1404g, the panel manager 536 may display a widgets panel 1800. An example of a

widgets panel 1800 is displaying a plurality of widgets 1804 is illustrated in Fig. 18a. In one implementation, up to six widgets may be displayed in the widget panel 1800. In another implementation, the widget panel 1800 may have equally sized regions with each region capable of holding a single widget. In yet another implementation, each region may hold widgets as small as 1 by 1 and as large as 4 by 4. In still another implementation, a widget placed within a region is always centered vertically and horizontally in the widget region. However, one skilled in the art will recognize that other implementations and arrangements are possible. For example, in another implementation, up to 10 widgets may be displayed. In still another implementation, the regions for the widgets are not equally sized. In yet another implementation, each region may hold widgets as small as 1 by 1 and as large as 8 by 8. In still another implementation, a widget placed anywhere within a widget region. In all embodiments, the widgets are not limited to square shapes, but may be any shape supported by the particular widget, such as oval, rectangular, triangular, etc.

[0177] As used herein, a "widget" refers to a type of application that may display live, automatically updating content such as the current weather, a news ticker, a stock market update, etc. Widgets can provide an at-a-glance view of the widget's data and functionality and can generally be classified as information widgets, collection widgets, control widgets, and hybrid widgets.

[0178] Information widgets can display a few crucial information elements that are important to a user and track how that information changes over time. Some examples for information widgets are weather widgets 1804a, clock widgets or sports score tracking widgets.

[0179] Collection widgets specialize in displaying multitude elements of the same type, such as a collection of pictures in a gallery widget, a collection of articles in a news widget 1804b, or a collection of emails/messages in a communication widget 1804c.

[0180] Control widgets can be used to display often used functions that the user can modify with the widget. A control widget may be thought of as a remote control for an application. One example of a control widget is a music application widget 1804d that allows the user to play, pause or skip music tracks from outside the actual music application.

[0181] A hybrid widget is a widget that combines elements of the other three widget types described above. A music player widget may combine control widget elements (by,

for example, allowing a user to play, pause, or skip a song) and information widget elements (by displaying track information such as a track number, a track name, etc.).

[0182] When a user selects the widgets icon 1404g in the application center 464, the user interface application 468 may retrieve widget information from a storage medium, such as memory 308 and data storage 312. The widget information may include, for example a list of widgets the user has previously selected to display in the widget panel 1800, the size of the widgets, the arrangement of the widgets, etc. The user interface application 468 may then pass the widget information to the application panel 544. The retrieved widget information may be used by the application panel 544 to determine which widgets 1804 to display in the widget panel 1800 and the arrangement and size of the widgets.

[0183] The widget panel 1800 may include hot keys 1520 that are context sensitive. The function of the hot keys 1520 may vary depending on which widget 1804 has focus. If focus is on a configurable widget 1804, the panel manager 536 may enable hot keys 1520 for "configure" 1520b and "remove" 1520c. If focus is on a nonconfigurable widget 1804, the panel manager 536 may disable the "configure" hot key 1520b and may enable the "remove" hot key 1520c.

[0184] The user may rearrange and/or reposition widgets 1804 in the widget panel 1800. The user may also resize widgets to tailor the amount of information displayed by the widget 1804. For example, a weather widget 1804a may allow a user to adjust the widget's size to determine how much information to display. In Fig. 18a, focus 1412 is on a weather widget 1804a which is illustrated displaying a sun icon 1808 and a current temperature 1812. By expanding the size of the weather widget 1804a, the panel manager 536 may display more information in the widget, as shown in Fig. 18b, where the weather widget 1804a is illustrated displaying location information 1816, a low temperature 1812a and a high temperature 1812b in additional to the sun icon 1808 and current temperature 1812. As a widget is resized, other widgets may be repositioned by the panel manager 536. For example, in Fig 18b, the panel manager 536 repositioned widgets 1804b, 1804e to make room for the weather widget 1804a when the weather widget 1804a was expanded.

[0185] Referring now to Fig. 18c, if focus 1412 is navigated to an open space 1820 in the widget panel 1800 containing no widget, the panel manager 536 may display an "Add Widget" message 1824 and the panel manager may enable the hot key "add" 1520d. If the user selects the "Add Widget" message 1824 or the "add" hot key 1520d, an add panel

1830 may display icons of available widgets 1804 that the user can select, as illustrated in Fig. 18d. The displayed icons may include widgets 1804 that have been previously installed but that may not currently be running and/or links to application stores (discussed above) where the user can purchase new widgets 1804 that may be downloaded and installed. The user may navigate focus 1412 to a widget to add it to the widget panel 1800. For example, in Fig. 18d, the widget "Sports" 1804f has focus. The user may add it to the widget panel 1800 by selecting it with the remote control 700 or using the "add" hot key 1520d, which may dismiss or hide the add panel 1830 and launch the widget panel 1800 with the "Sports" 1804f widget displayed, as illustrated in Fig. 18e. Selecting any widget drops the selected widget into the current region of the widgets panel 1800. If selecting and adding a widget launches a configuration panel for the selected widget, then the configuration panel may be displayed to the user and the user may select options associated with the widget. For example, the widget configuration panels may allow the user to select a size, a placement, or other information options unique to the widget. If the widget panel 1800 does not have an open space, the user may select and remove one or more of the widgets currently displayed to make room for new widgets to be displayed. In an implementation, the Android ICS widget selector may be used to add a widget to the widget panel. In this implementation, focus and overflow following existing Android patterns.

[0186] The user may also navigate focus to a widget 1804 displayed in the widget panel 1800 and launch the widget 1804. When a widget 1804 is launched, the associated application may launch, for example, to provide a detail view with more information than is displayed in the widget view. For example, in Fig. 18a, if the weather widget 1804a is selected, a weather application may launch providing more detailed information about the weather.

[0187] Fig. 19 is a flow diagram of an embodiment of a method 1900 for using the application center 464. Illustratively, the elements described herein may be stored-program-controlled entities, and a computer or processor 364 can perform the method 1900 of Fig. 19 and the processes described herein by executing program instructions stored in a tangible computer readable storage medium, such as a memory 308 or data storage 312. Although the method 1900, described in Fig. 19, is shown in a specific order, one of skill in the art would recognize that the steps in Fig. 19 may be implemented in a different order and/or be implemented in a multi-threaded environment. Moreover, various steps may be omitted or added based on implementation. Hereinafter, the method

1900 shall be explained with reference to the systems, components, modules, software, etc. described in conjunction with Figs. 1A-18e.

[0188] The method 1900 starts 1902 when a user sends an input or request to activate the application center 464 by various methods, such as by touching the touch sensitive display screen 212, by speaking a voice command which is received by a microphone 220, by providing a gesture using the gesture capture regions 224, 228, by selecting a button 252 on the Intelligent TV 100, by a remote control 700, and/or by using a device 168. An input event manager 508 is operable to receive the input or request 1904 and can send the request to the panel manager 536.

[0189] The processor 364 may identify 1906 the user using microphone 220, gesture capture regions 224, 228, image capture devices 232, and the range finding device 240. The user may also be identified if the user logged in or otherwise entered the user's name or identify into the Intelligent TV 100 during the viewing session. If the user is identified, then the user interface application 468 may retrieve application usage information based on applications used by the identified user 1910.

[0190] If the user is not identified 1908, the user interface application 468 may retrieve application usage information based on applications used by all users of the Intelligent TV 100 stored in memory 308 and/or data storage 312.

[0191] The application panel 544 may then use the retrieved application usage information to determine 1912 which application icons 1404 to display in the application center 464. The input event manager 508 may then receive a selection from the user and can determine 1914 the type of selection made. When the input event manager 508 receives an application selection, the panel manager 536 may launch 1916 the selected application on the screen 212. The process 1900 may then end 1918.

[0192] If the input event manager 508 receives a request 1914 for the information panel 1500, the panel manager 536 may display 1920 the information panel 1500. The input event manager 508 may then receive a selection 1922 from the user and can determine the type of selection made. If the input event manager 508 receives an application selection, the panel manager 536 may launch the selected application 1916 on the screen 212 and the process 1900 may then end 1918.

[0193] The input event manager 508 may receive a request from the user 1922 to return to the information panel 1500 or the application center 464 and the panel manager 536 may repeat 1920 or 1912.

[0194] If the input event manager 508 receives a request 1922 for the recommended application panel 1700, the panel manager 536 may launch 1924 the recommended application panel.

[0195] The input event manager 508 may receive another selection from the user 1928. If the input event manager 508 receives an application selection, the panel manager 536 may launch the selected application 1916bon the screen 212. The process 1900 may then end 1918.

[0196] If the input event manager 508 receives a request from the user 1928 for more recommended applications, to return to the information panel 1500, or to return to the application center 464, the panel manager 536 may repeat return to 1924, 1920 or 1912.

[0197] At any point in the process 1900, the input event manager 508 may receive a command to close the application center 464 from the user. If the input event manager 508 receives a close command, the process 1900 then proceeds to 1918 and closes or hides the application center 464, and the process 1900 ends.

[0198] Fig. 20 is a flow diagram of an embodiment of a method 2000 for displaying and using widgets. Illustratively, the elements described herein may be stored-program-controlled entities, and a computer or processor 364 can perform the method 2000 of Fig. 20 and the processes described herein by executing program instructions stored in a tangible computer readable storage medium, such as a memory 308 or data storage 312. Although the method 2000, described in Fig. 20, is shown in a specific order, one of skill in the art would recognize that the steps in Fig. 20 may be implemented in a different order and/or be implemented in a multi-threaded environment. Moreover, various steps may be omitted or added based on implementation. Hereinafter, the method 2000 shall be explained with reference to the systems, components, modules, software, etc. described in conjunction with Figs. 1A-18e.

[0199] The method 2000 starts 2002 when a user sends a request to activate the widget panel 1804 by, for example, selecting the widget icon 1404g displayed in the application center 464. An input event manager 508 is operable to receive the request 2004 and can send the request to the panel manager 536. The application panel 544 may display 2006 the widget panel 1800.

[0200] The input event manager 508 may then determine 2008 if the user has requested to resize a widget. When the input event manager 508 receives a request to resize a widget, the panel manager 536 may open the settings panel 524 and the user may resize

the selected widget 2010. The panel manager 536 may resize and/or reposition other widgets, if necessary, as the selected widget is resized by the user.

[0201] The input event manager 508 may then determine 2012 if the user has requested to remove a widget from the widget panel 1800, and, if so the panel manager 536 may then remove the selected widget 2014.

[0202] The input event manager 508 may then determine 2016 if the user has requested to add a widget by, for example, selecting the "Add Widget" message 1824 or selecting the "add" hot key 1520d. If the user has requested to add a widget, the panel manager 536 may open an add panel 1830 which may display icons of available widgets that the user can select to add to the widget panel 1800. The displayed widgets may include widgets that have previously been installed but that are not currently running and the add panel 1830 may also provide links to one or more application stores where the user can select from new widgets that may be purchased or rented and then downloaded and installed. The user may navigate focus 1412 within the add panel 1830 to indicate a widget to add to the widget panel and may then select the widget with focus. The input event manager 508 can determine which widget, if any, the user has selected and the panel manager 536 may then add the selected widget to the widget panel 1800 and then dismiss the add panel 1830.

[0203] The user may 2020 navigate focus 1412 to a widget displayed in the widget panel 1800 and launch an application associated with the widget with focus 1412. The input event manager 508 can determine which widget the user has selected to launch and the panel manager 536 may then launch the application associated with the widget and provide the user with the associated content and/or functionality of the application for the widget with focus. The panel manager 536 may then dismiss or hide the widget panel 1800 and the process 2000 may then end 2024.

[0204] If the user does not select a widget to launch 2020, the input event manager 508 may determine 2026 if the user has sent a command to exit the widget panel 1800 and, if so, the panel manager may dismiss or hide the widget panel 1800 and the process 2000 may then end 2024. If the user has not sent a command to exit the widget panel 1800, the process 2000 may return to step 2006.

[0205] Of course, one of skill in the art will recognize that the user can send a command to exit the widget panel 1800 at any point in process 2000. If input event manager 508 receives a command to close or exit the widget panel 1800, the panel manager 536 may close the widget panel and the process 2000 may proceed to 2024 and end.

[0206] The exemplary systems and methods of this disclosure have been described in relation to the dynamic arrangement of an application center based on usage. However, to avoid unnecessarily obscuring the present disclosure, the preceding description omits a number of known structures and devices. This omission is not to be construed as a limitation of the scopes of the claims. Specific details are set forth to provide an understanding of the present disclosure. It should however be appreciated that the present disclosure may be practiced in a variety of ways beyond the specific detail set forth herein.

[0207] Furthermore, while the exemplary aspects, embodiments, and/or configurations illustrated herein show the various components of the system collocated, certain components of the system can be located remotely, at distant portions of a distributed network, such as a LAN and/or the Internet, or within a dedicated system. Thus, it should be appreciated, that the components of the system can be combined in to one or more devices, or collocated on a particular node of a distributed network, such as an analog and/or digital telecommunications network, a packet-switch network, or a circuit-switched network. It will be appreciated from the preceding description, and for reasons of computational efficiency, that the components of the system can be arranged at any location within a distributed network of components without affecting the operation of the system. For example, the various components can be located in a switch such as a PBX and media server, gateway, in one or more communications devices, at one or more users' premises, or some combination thereof. Similarly, one or more functional portions of the system could be distributed between a telecommunications device(s) and an associated computing device.

[0208] Furthermore, it should be appreciated that the various links connecting the elements can be wired or wireless links, or any combination thereof, or any other known or later developed element(s) that is capable of supplying and/or communicating data to and from the connected elements. These wired or wireless links can also be secure links and may be capable of communicating encrypted information. Transmission media used as links, for example, can be any suitable carrier for electrical signals, including coaxial cables, copper wire and fiber optics, and may take the form of acoustic or light waves, such as those generated during radio-wave and infra-red data communications.

[0209] Also, while the flowcharts have been discussed and illustrated in relation to a particular sequence of events, it should be appreciated that changes, additions, and omissions to this sequence can occur without materially affecting the operation of the disclosed embodiments, configuration, and aspects.

[0210] A number of variations and modifications of the disclosure can be used. It would be possible to provide for some features of the disclosure without providing others.

[0211] For example, in one alternative embodiment the application center arranges applications based in an order based on a last used application, a second last used application, a most used application, a second most used application, a newest application, and a second newest application. In another alternative embodiment, panels may be displayed to a user and may comprise one or more combinations of an information panel and a recommended panel. In some alternative embodiments, the translucency and position of each panel is user configurable such that each panel may vary in transparency.

[0212] In still another embodiment, the organization of a panel and the application information displayed in a panel may change based on the type of application that has focus when the panel is requested. In another embodiment, the layout, information, and content of a panel may depend on the context and content of the application with focus when a user activates the panel. In yet another embodiment, the organization and information presented by a panel may change if an application is active or playing when the panel is requested compared to an panel presented when an application is inactive. For example, the information presented by a panel and the layout of the panel may be different when an application which is a game is being played when the panel is presented compared to the information presented and the layout of the panel when the same game application is not being played when the panel is requested.

[0213] In still another embodiment, the Intelligent TV may also provide a widget panel which simplifies use and display of widgets. The widget panel may enable a user to expand or decrease the size of a widget to expand or decrease the amount of information presented by the widget. In another embodiment, the widget panel may enable a user to select additional widgets for display in the widget panel by presented a list of one or more recommended widgets to the user.

[0214] In yet another embodiment, the systems and methods of this disclosure can be implemented in conjunction with a special purpose computer, a programmed microprocessor or microcontroller and peripheral integrated circuit element(s), an ASIC or other integrated circuit, a digital signal processor, a hard-wired electronic or logic circuit such as discrete element circuit, a programmable logic device or gate array such as PLD, PLA, FPGA, PAL, special purpose computer, any comparable means, or the like. In general, any device(s) or means capable of implementing the methodology illustrated herein can be used to implement the various aspects of this disclosure. Exemplary

hardware that can be used for the disclosed embodiments, configurations and aspects includes computers, handheld devices, telephones (e.g., cellular, Internet enabled, digital, analog, hybrids, and others), and other hardware known in the art. Some of these devices include processors (e.g., a single or multiple microprocessors), memory, nonvolatile storage, input devices, and output devices. Furthermore, alternative software implementations including, but not limited to, distributed processing or component/object distributed processing, parallel processing, or virtual machine processing can also be constructed to implement the methods described herein.

[0215] In yet another embodiment, the systems and methods of this disclosure can be implemented in conjunction with a special purpose computer, a programmed microprocessor or microcontroller and peripheral integrated circuit element(s), an ASIC or other integrated circuit, a digital signal processor, a hard-wired electronic or logic circuit such as discrete element circuit, a programmable logic device or gate array such as PLD, PLA, FPGA, PAL, special purpose computer, any comparable means, or the like. In general, any device(s) or means capable of implementing the methodology illustrated herein can be used to implement the various aspects of this disclosure. Exemplary hardware that can be used for the disclosed embodiments, configurations and aspects includes computers, handheld devices, telephones (e.g., cellular, Internet enabled, digital, analog, hybrids, and others), and other hardware known in the art. Some of these devices include processors (e.g., a single or multiple microprocessors), memory, nonvolatile storage, input devices, and output devices. Furthermore, alternative software implementations including, but not limited to, distributed processing or component/object distributed processing, parallel processing, or virtual machine processing can also be constructed to implement the methods described herein.

[0216] In yet another embodiment, the disclosed methods may be readily implemented in conjunction with software using object or object-oriented software development environments that provide portable source code that can be used on a variety of computer or workstation platforms. Alternatively, the disclosed system may be implemented partially or fully in hardware using standard logic circuits or VLSI design. Whether software or hardware is used to implement the systems in accordance with this disclosure is dependent on the speed and/or efficiency requirements of the system, the particular function, and the particular software or hardware systems or microprocessor or microcomputer systems being utilized.

[0217] In yet another embodiment, the disclosed methods may be partially implemented in software that can be stored on a storage medium, executed on programmed general-purpose computer with the cooperation of a controller and memory, a special purpose computer, a microprocessor, or the like. In these instances, the systems and methods of this disclosure can be implemented as program embedded on personal computer such as an applet, JAVA® or CGI script, as a resource residing on a server or computer workstation, as a routine embedded in a dedicated measurement system, system component, or the like. The system can also be implemented by physically incorporating the system and/or method into a software and/or hardware system.

[0218] Although the present disclosure describes components and functions implemented in the aspects, embodiments, and/or configurations with reference to particular standards and protocols, the aspects, embodiments, and/or configurations are not limited to such standards and protocols. Other similar standards and protocols not mentioned herein are in existence and are considered to be included in the present disclosure. Moreover, the standards and protocols mentioned herein and other similar standards and protocols not mentioned herein are periodically superseded by faster or more effective equivalents having essentially the same functions. Such replacement standards and protocols having the same functions are considered equivalents included in the present disclosure.

[0219] The present disclosure, in various aspects, embodiments, and/or configurations, includes components, methods, processes, systems and/or apparatus substantially as depicted and described herein, including various aspects, embodiments, configurations embodiments, subcombinations, and/or subsets thereof. Those of skill in the art will understand how to make and use the disclosed aspects, embodiments, and/or configurations after understanding the present disclosure. The present disclosure, in various aspects, embodiments, and/or configurations, includes providing devices and processes in the absence of items not depicted and/or described herein or in various aspects, embodiments, and/or configurations hereof, including in the absence of such items as may have been used in previous devices or processes, e.g., for improving performance, achieving ease and\or reducing cost of implementation.

[0220] The foregoing discussion has been presented for purposes of illustration and description. The foregoing is not intended to limit the disclosure to the form or forms disclosed herein. In the foregoing Detailed Description for example, various features of the disclosure are grouped together in one or more aspects, embodiments, and/or

configurations for the purpose of streamlining the disclosure. The features of the aspects, embodiments, and/or configurations of the disclosure may be combined in alternate aspects, embodiments, and/or configurations other than those discussed above. This method of disclosure is not to be interpreted as reflecting an intention that the claims require more features than are expressly recited in each claim. Rather, as the following claims reflect, inventive aspects lie in less than all features of a single foregoing disclosed aspect, embodiment, and/or configuration. Thus, the following claims are hereby incorporated into this Detailed Description, with each claim standing on its own as a separate preferred embodiment of the disclosure.

[0221] Moreover, though the description has included description of one or more aspects, embodiments, and/or configurations and certain variations and modifications, other variations, combinations, and modifications are within the scope of the disclosure, e.g., as may be within the skill and knowledge of those in the art, after understanding the present disclosure. It is intended to obtain rights which include alternative aspects, embodiments, and/or configurations to the extent permitted, including alternate, interchangeable and/or equivalent structures, functions, ranges or steps to those claimed, whether or not such alternate, interchangeable and/or equivalent structures, functions, ranges or steps are disclosed herein, and without intending to publicly dedicate any patentable subject matter.

What is claimed is:

1. A non-transitory computer readable storage medium having stored thereon instructions that cause a processor to execute a method of organizing application icons on a television display, the method comprising the steps of:

receiving input to activate an application center;

retrieving application usage information from a storage medium;

determining which application icons to display based on the retrieved application usage information; and

displaying on the television display one or more application icons in the application center.

2. The non-transitory computer readable storage medium of claim 1, wherein the application usage information comprises at least one of:

a last used application; a second last used application; a most used application; a second most used application; a newest application; and a second newest application.

3. The non-transitory computer readable storage medium of claim 1, further comprising:

receiving input to launch an application selected from the one or more application icons displayed in the application center; and

launching the application selected.

4. The non-transitory computer readable storage medium of claim 1, further comprising:

receiving input for information about an application selected from the one or more application icons displayed in the application center;

retrieving application information about the selected application; and

displaying on the television display the retrieved application information in an information panel.

5. The non-transitory computer readable storage medium of claim 4, further comprising:

receiving input to launch the application displayed in the information panel; and

launching the application.

6. The non-transitory computer readable storage medium of claim 4, wherein the application information comprises at least one of:

a thumbnail; a name; a description; a version; a revision date; a developer name; a category name; a user rating; and a content rating.

7. The non-transitory computer readable storage medium of claim 4, wherein the information panel includes a first list of one or more recommended applications.

8. The non-transitory computer readable storage medium of claim 7, further comprising:

receiving a selection of a recommended application displayed in the first list; and

connecting to an application store to purchase or rent the selected recommended application.

9. The non-transitory computer readable storage medium of claim 7, further comprising:

receiving input to list more recommended applications; and

displaying on the television display a second list of one or more recommended applications in a recommended application panel.

10. The non-transitory computer readable storage medium of claim 3 further comprising: if the selected application icon is a widget icon, retrieving widget information from a storage medium;

determining which widgets to display based on the retrieved widget information; and

displaying on the television display one or more widgets in a widget panel.

11. The non-transitory computer readable storage medium of claim 1, further comprising:

identifying a user associated with the request;

wherein the retrieved application usage information is associated with the identified user.

12. A television system, comprising:

a display;

a memory;

a processor in communication with the memory and the display, the processor operable to:

receive input to activate an application center;

retrieve application usage information from a storage medium;

determine which application icons to display based on the retrieved application usage information; and

display, on the display, one or more application icons in the application center,

wherein the application usage information comprises at least one of:

a last used application, a second last used application, a most used application, a second most used application, a newest application, and a second newest application.

13. The television system of claim 12, wherein the processor is further operable to:

receive input for information about an application selected from the one or more application icons displayed in the application center;

retrieve application information about the selected application from a storage medium; and

display, on the display, the retrieved application information in an information panel.

14. The television system of claim 13, wherein the information panel includes a first list of one or more recommended applications.

15. The television system of claim 14, wherein the processor is further operable to:

receive input to list more recommended applications; and

display, on the display, a second list of one or more recommended applications in a recommended application panel.

16. The television system of claim 14, wherein the processor is further operable to:

receive input to launch an application selected from the application icons displayed in the information panel; and

launch the selected application.

17. A method for organizing application icons on a television, the method comprising:

receiving input to activate an application center;

retrieving application usage information from a storage medium;

determining which application icons to display based on the retrieved application usage information; and

displaying on the television display one or more application icons in the application center.

18. The method of claim 17, further comprising:

receiving input for information about an application selected from the one or more application icons displayed in the application center;

retrieving application information about the selected application from a storage medium; and

displaying on the television display the retrieved application information in an information panel.

19. The method of claim 18, wherein the information panel includes a first list of one or more recommended applications.

20. The method of claim 19, further comprising:

receiving input to list more recommended applications; and

displaying on the television display a second list of one or more recommended applications in a recommended application panel.

21. The method of claim 17, further comprising:

receiving input to launch an application selected from the one or more application icons displayed in the application center; and

launching the selected application.

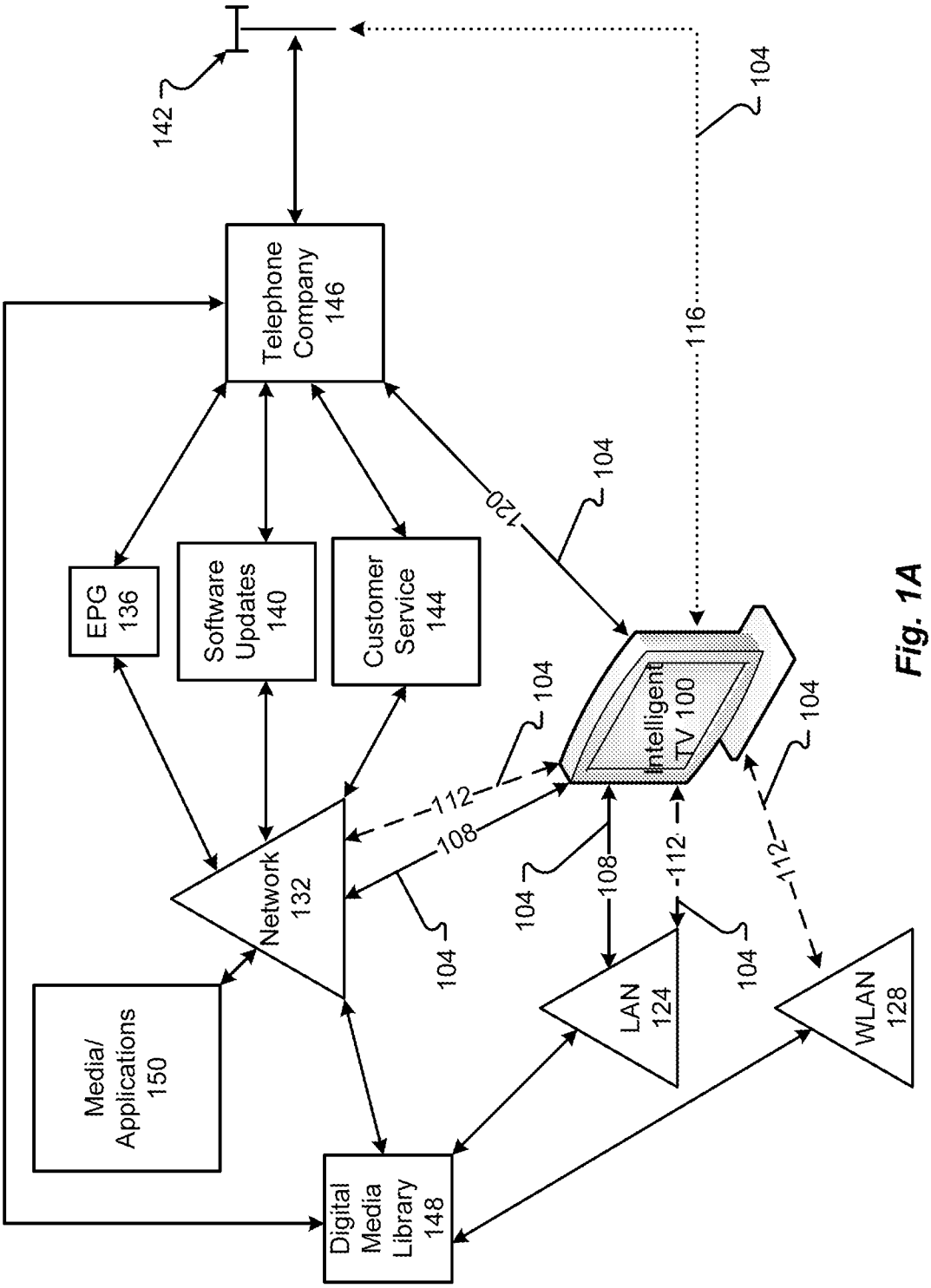
142
104
Telephone Company 146
116
EPG 136
Software Updates 140
Customer Service 144
120
104
Intelligent TV 100
104
112
108
Network 132
104
104
108
112
112
104
104
Media/ Applications 150
LAN 124
WLAN 128
Digital Media Library 148

Fig. 1A

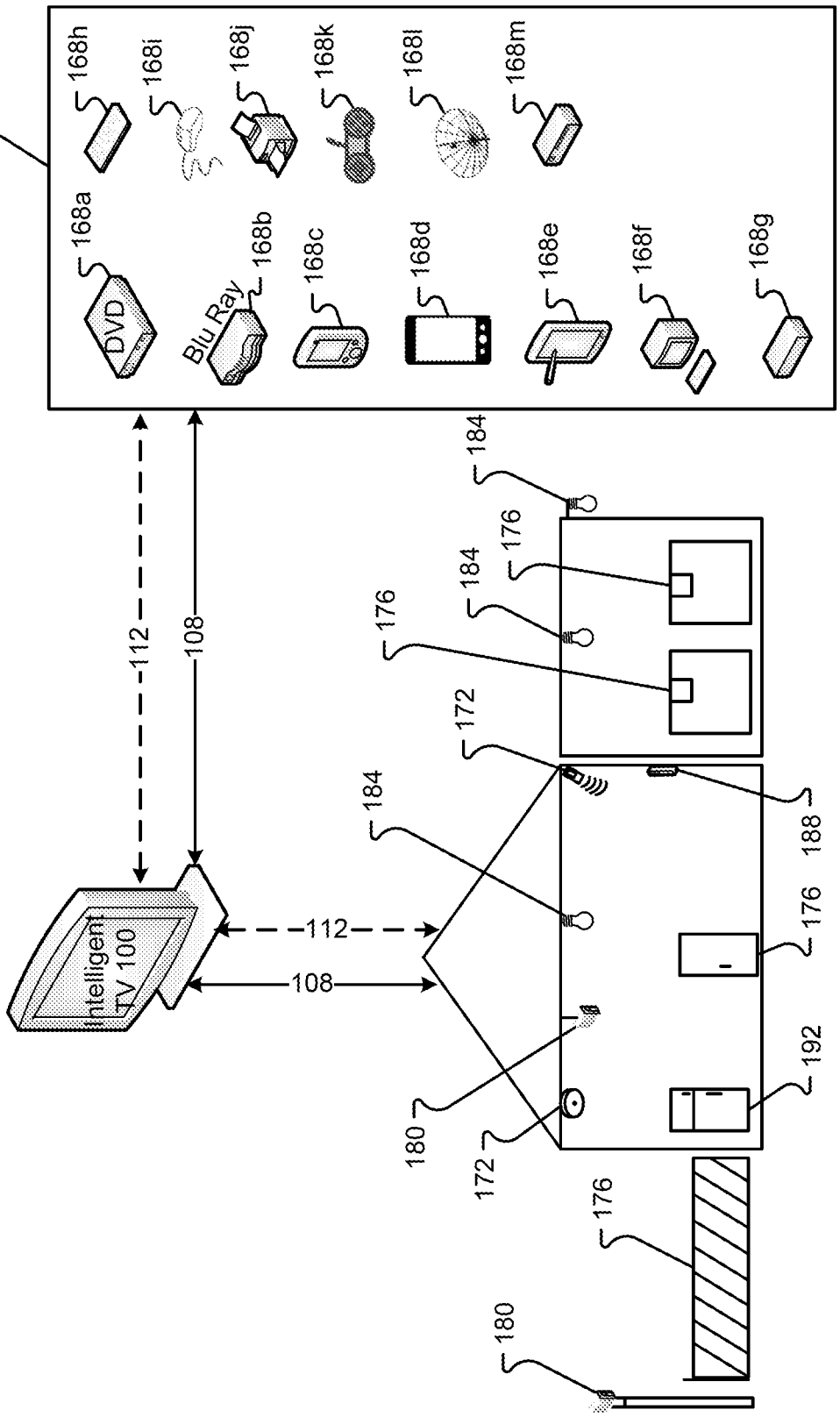
168
168h
168i
168j
168k
168l
168m
168a
DVD
168b
Blu Ray
168c
168d
168e
168f
168g
112
108
Intelligent TV 100
184
176
172
188
180
192

Fig. 1B

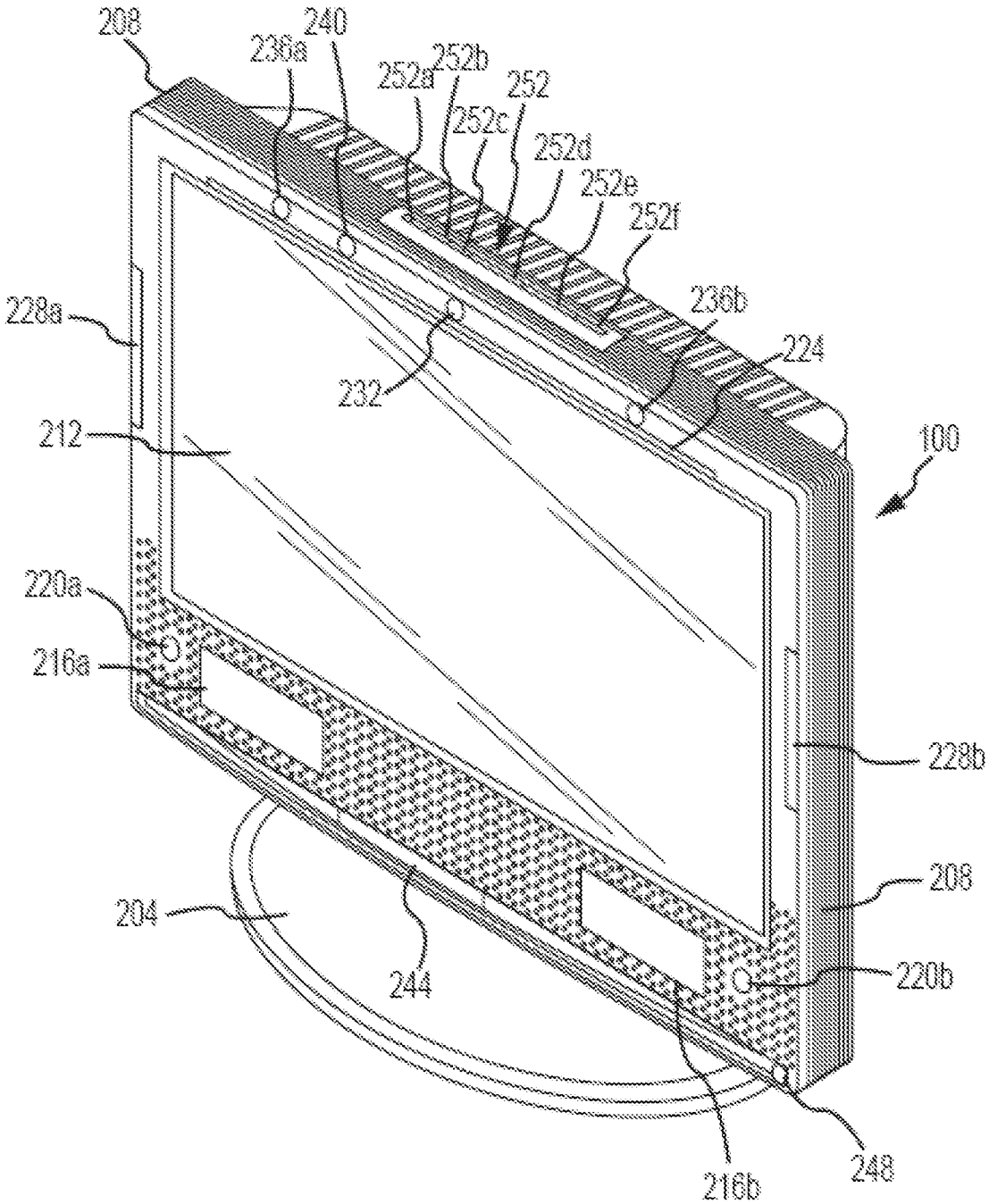
208
240
236a
252a
252b
252
252c
252d
252e
252f
236b
224
228a
232
212
100
220a
216a
228b
208
204
244
220b
216b
248

Fig. 2A

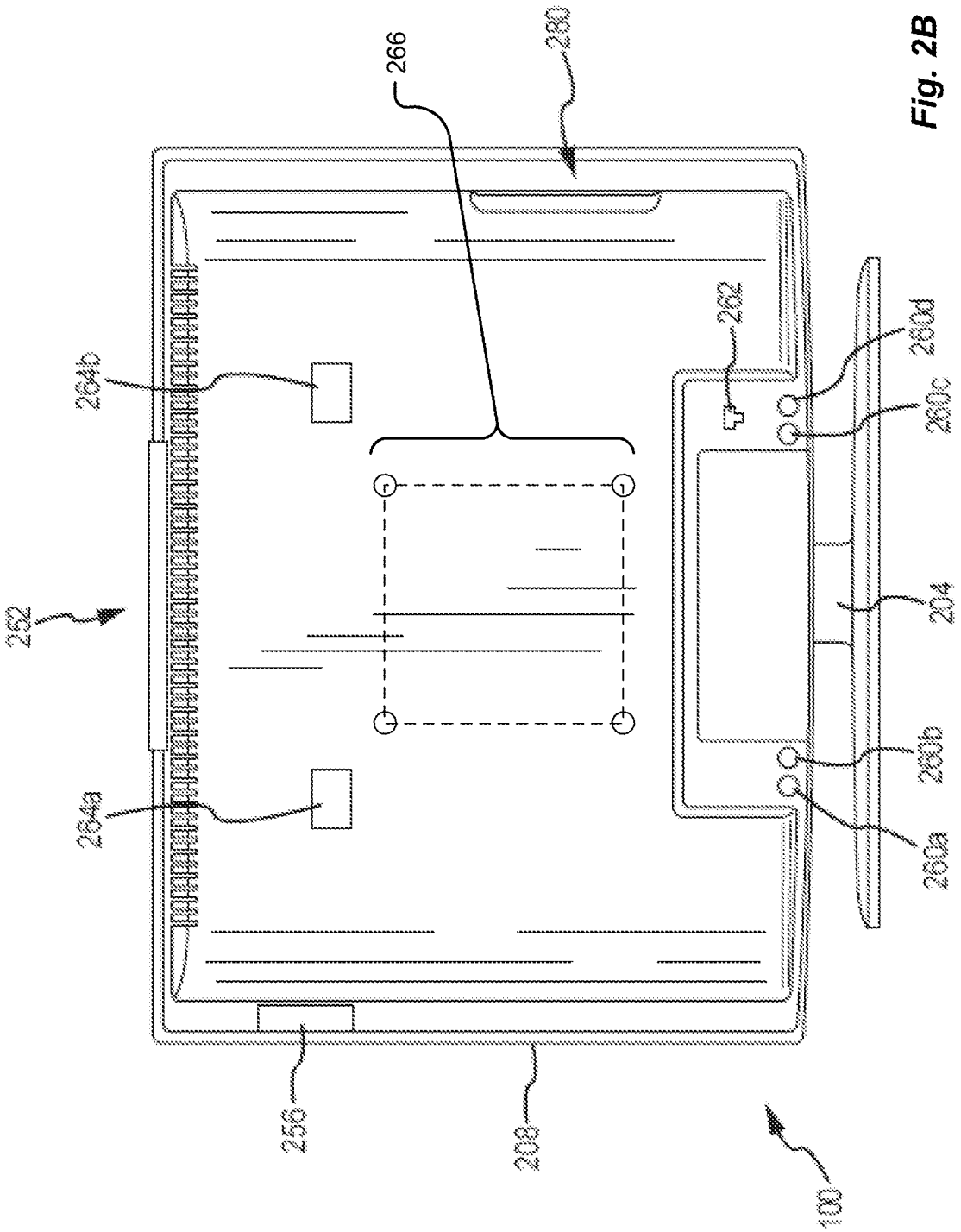

Fig. 2B

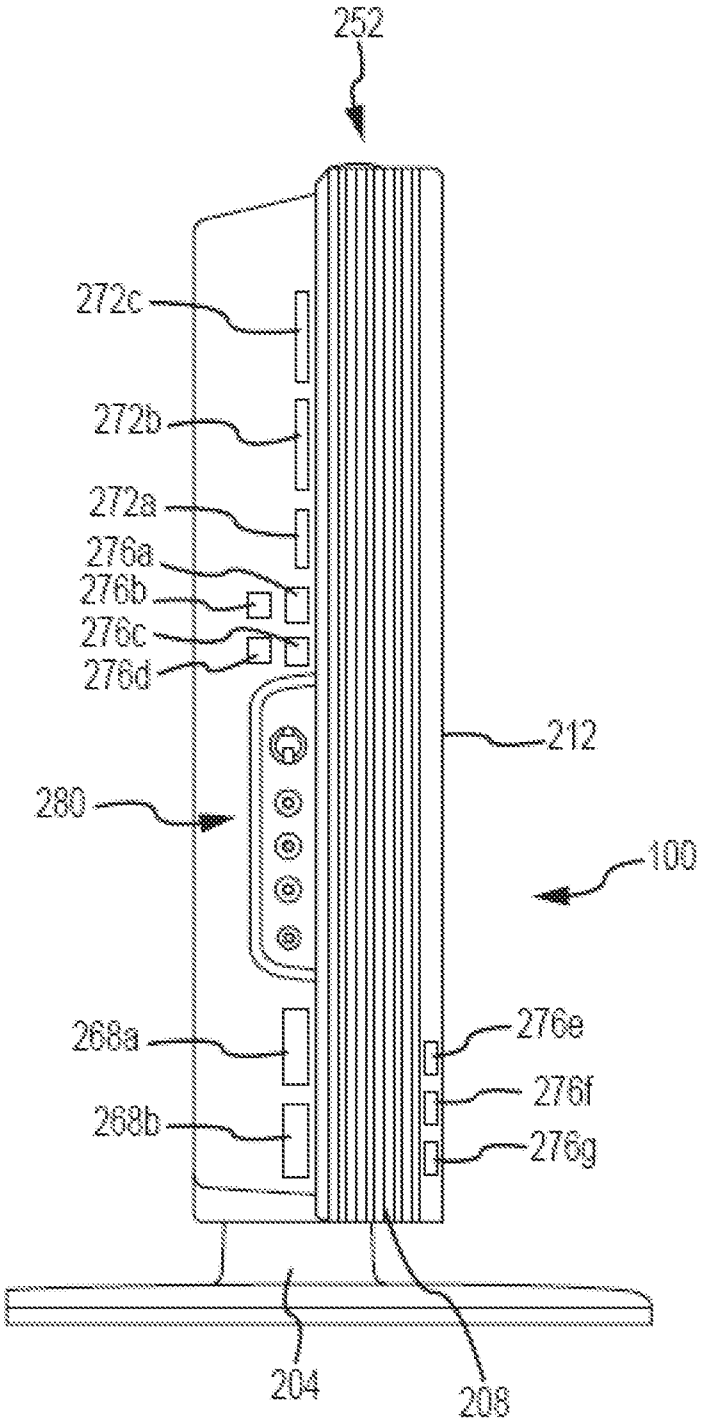
252
272c
272b
272a
276a
276b
276c
276d
212
280
100
268a
276e
276f
268b
276g
204
208

Fig. 2C

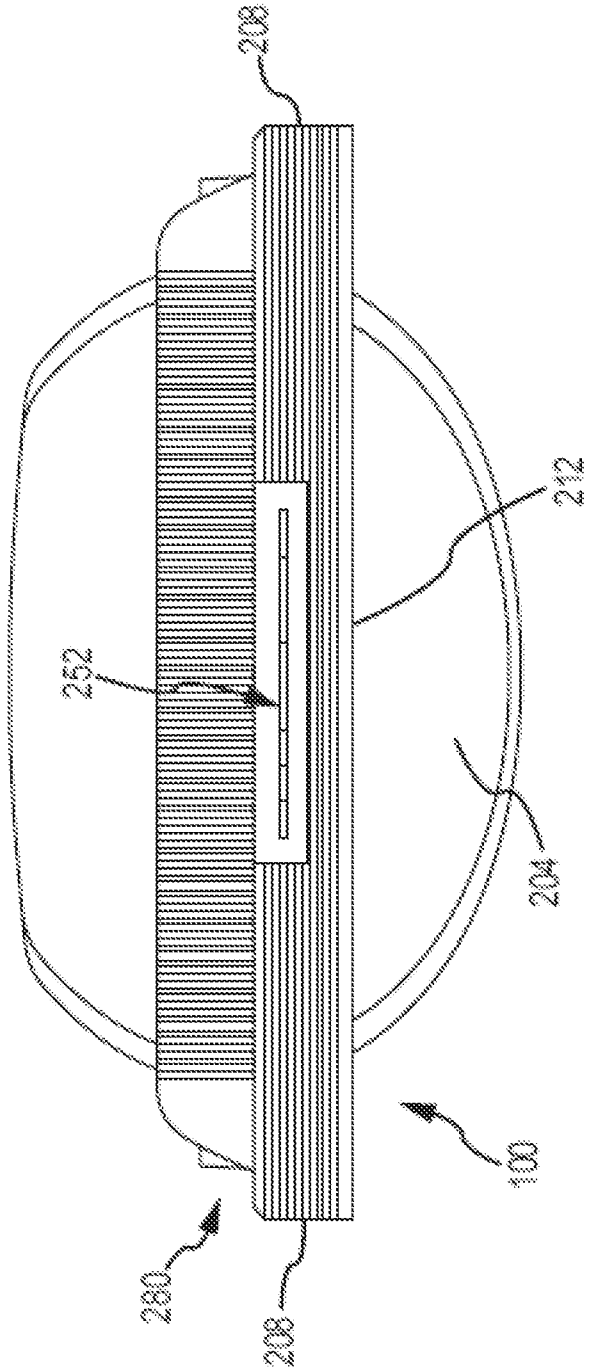

Fig. 2D

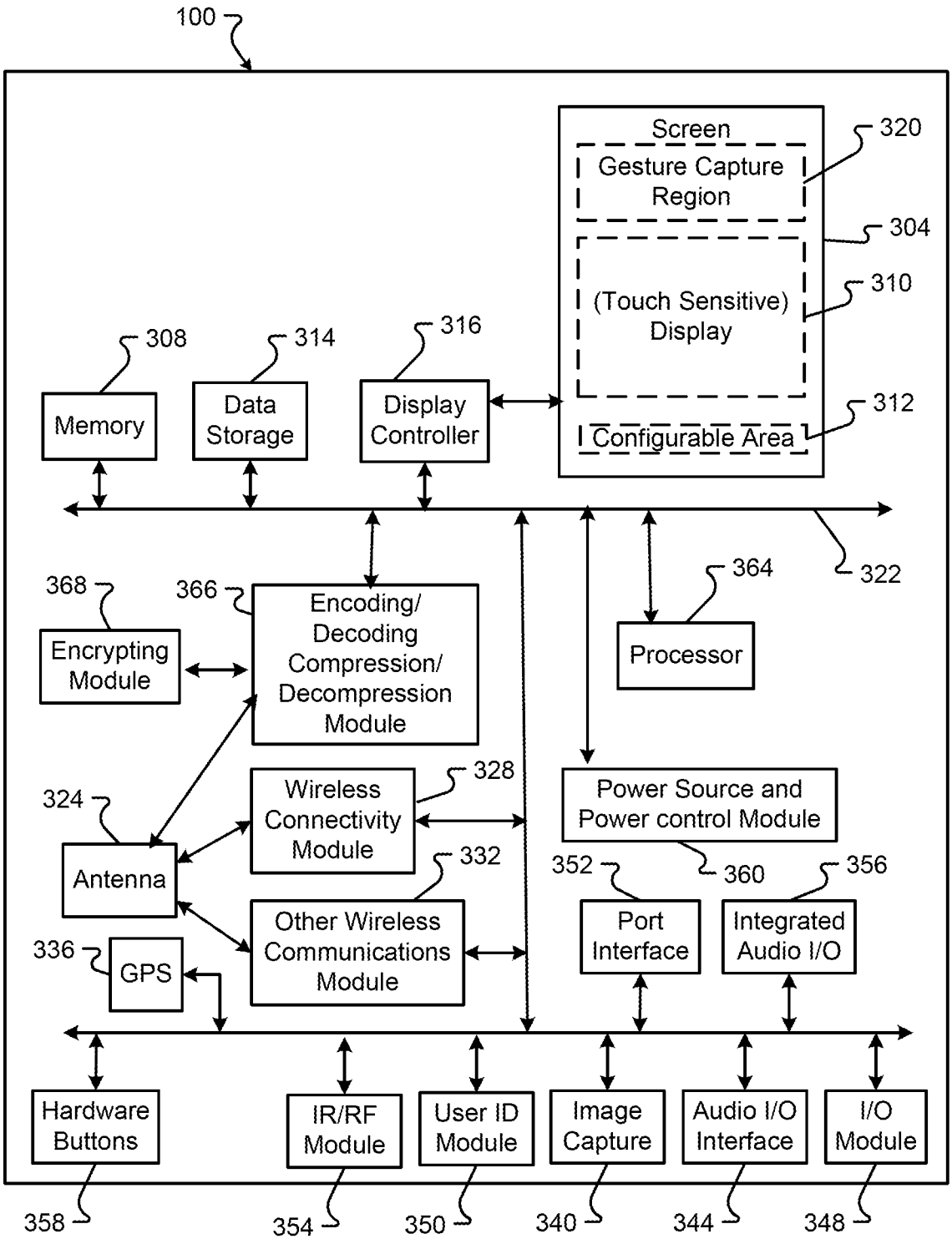
100
Screen
320
Gesture Capture Region
304
(Touch Sensitive) Display
310
312
Configurable Area
308
Memory
314
Data Storage
316
Display Controller
322
364
Processor
368
Encrypting Module
366
Encoding/ Decoding Compression/ Decompression Module
328
Wireless Connectivity Module
324
Antenna
332
Other Wireless Communications Module
336
GPS
Power Source and Power control Module
360
352
Port Interface
356
Integrated Audio I/O
Hardware Buttons
358
IR/RF Module
354
User ID Module
350
Image Capture
340
Audio I/O Interface
344
I/O Module
348

FIG. 3

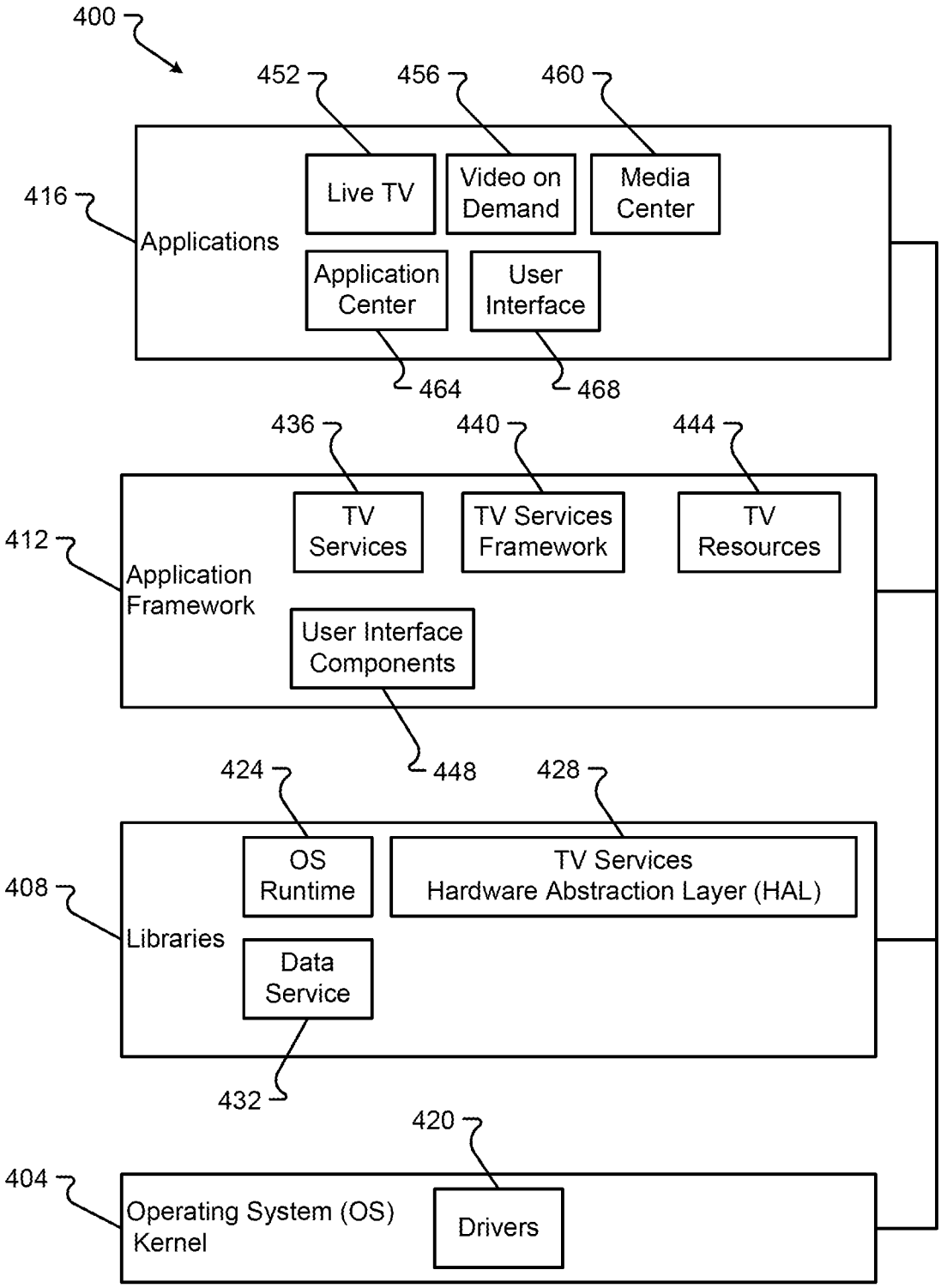
400
452
456
460
416
Applications
Live TV
Video on Demand
Media Center
Application Center
User Interface
464
468
436
440
444
412
Application Framework
TV Services
TV Services Framework
TV Resources
User Interface Components
448
424
428
408
Libraries
OS Runtime
TV Services Hardware Abstraction Layer (HAL)
Data Service
432
420
404
Operating System (OS) Kernel
Drivers

FIG. 4

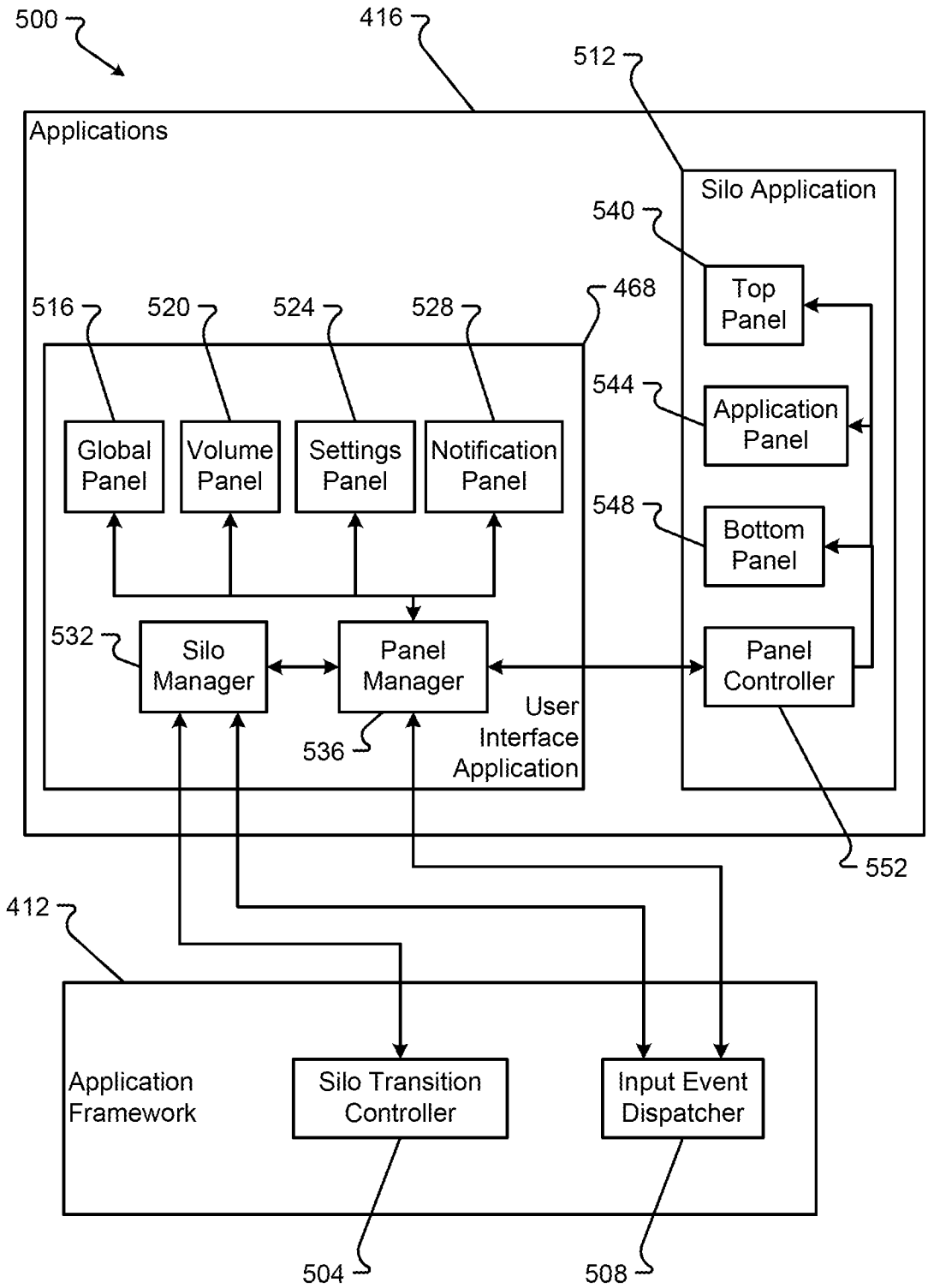
500
416
512
Applications
Silo Application
540
Top Panel
468
516
520
524
528
544
Application Panel
Global Panel
Volume Panel
Settings Panel
Notification Panel
548
Bottom Panel
532
Silo Manager
Panel Manager
Panel Controller
User Interface Application
536
552
412
Application Framework
Silo Transition Controller
Input Event Dispatcher
504
508

FIG. 5

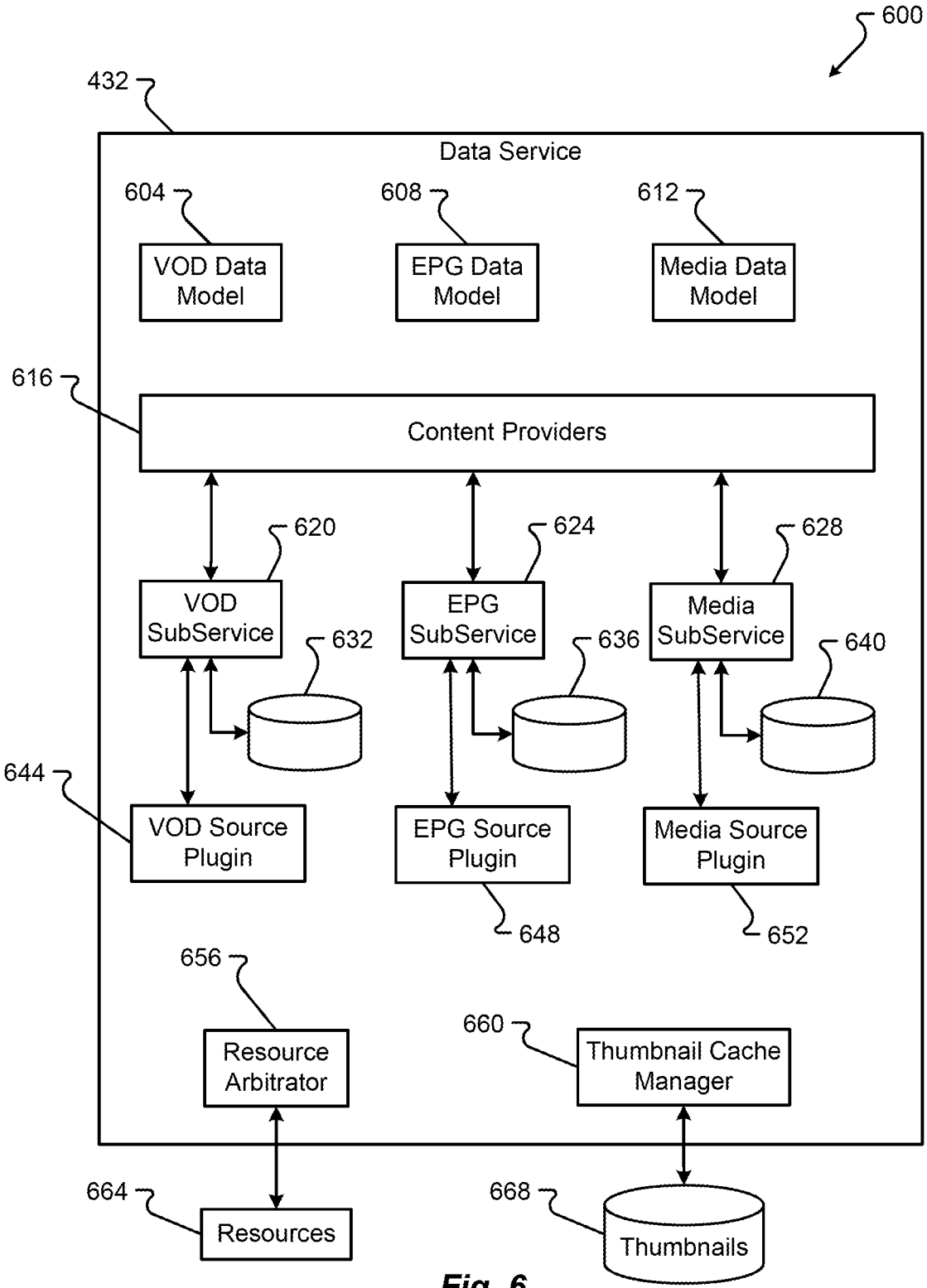
600
432
Data Service
604
VOD Data Model
608
EPG Data Model
612
Media Data Model
616
Content Providers
620
VOD SubService
624
EPG SubService
628
Media SubService
632
636
640
644
VOD Source Plugin
EPG Source Plugin
Media Source Plugin
648
652
656
Resource Arbitrator
660
Thumbnail Cache Manager
664
Resources
668
Thumbnails

Fig. 6

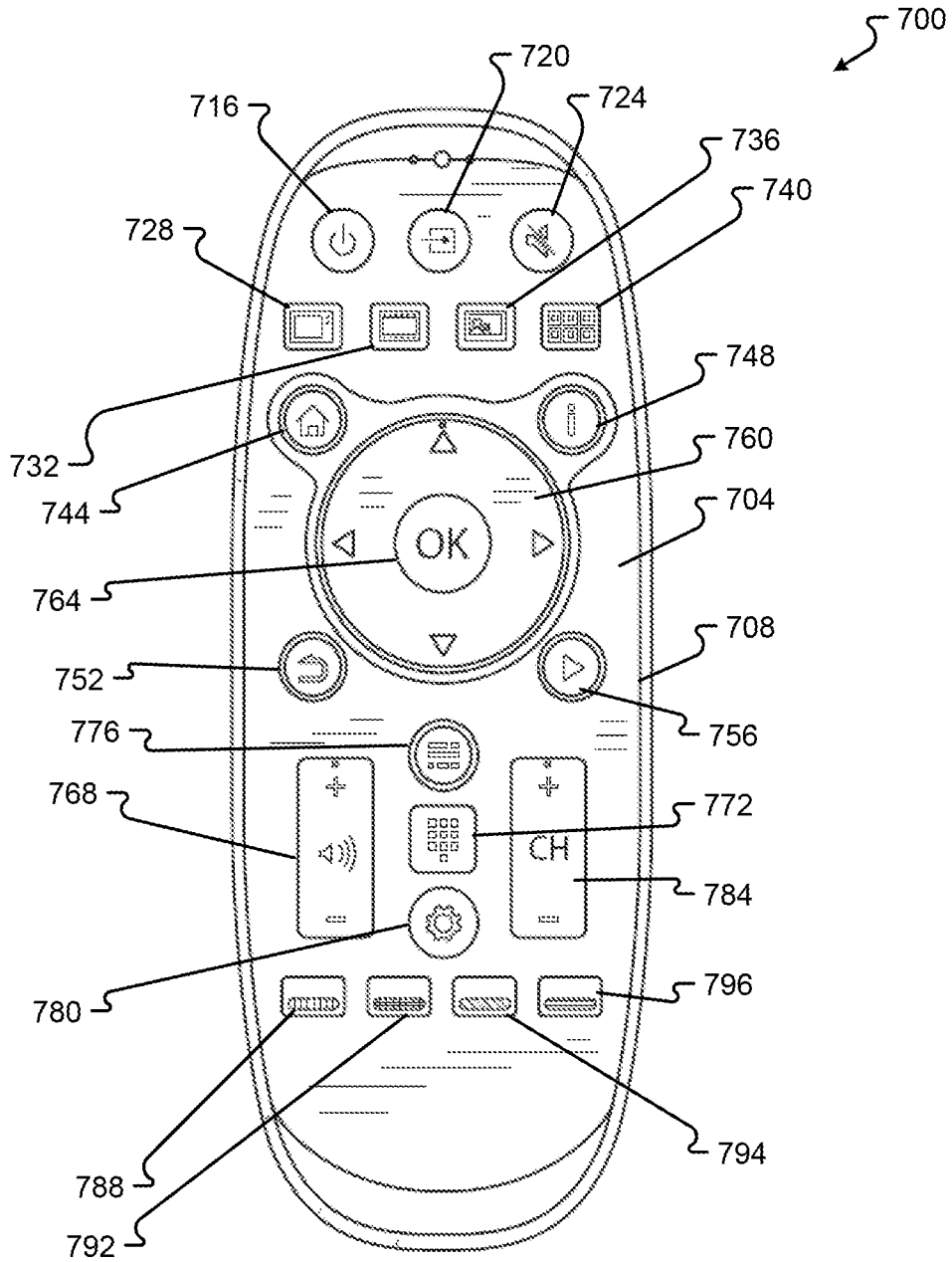
700
720
716
724
736
740
728
748
732
760
744
704
OK
764
708
752
756
776
768
772
CH
784
780
796
794
788
792

Fig. 7

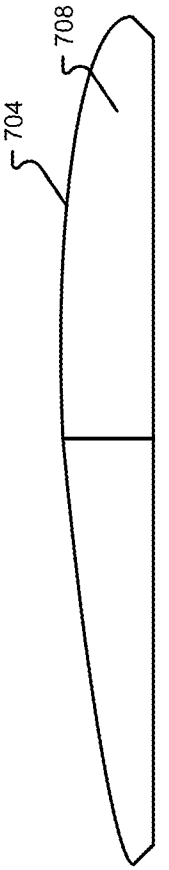

Fig. 8

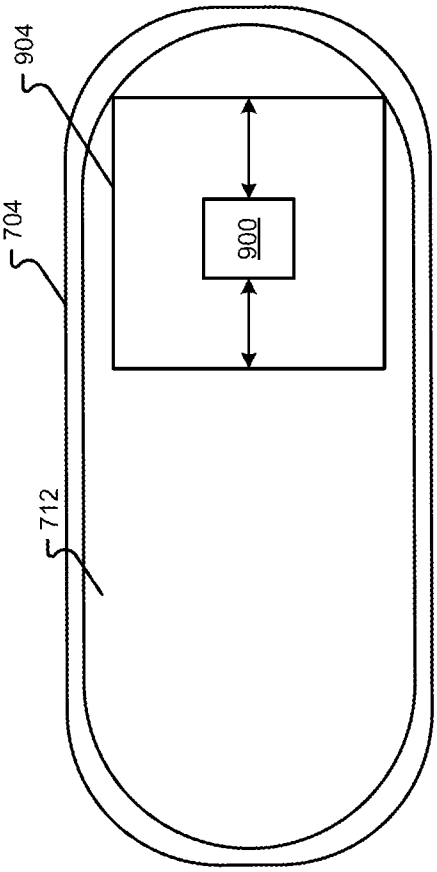

Fig. 9A

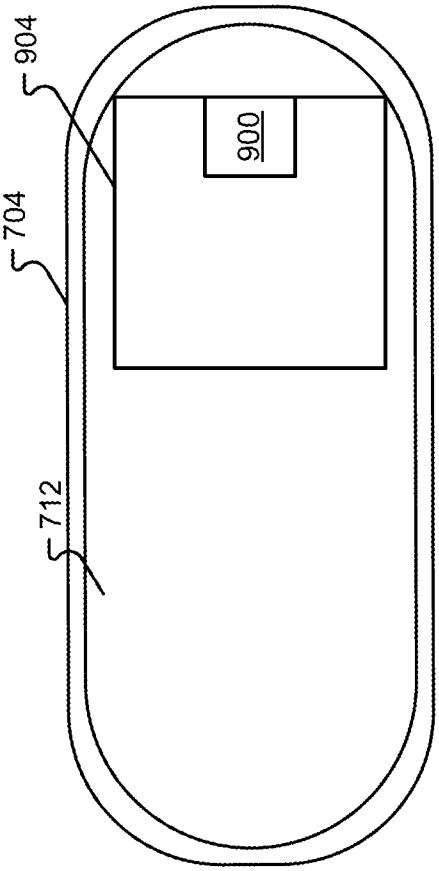

Fig. 9B

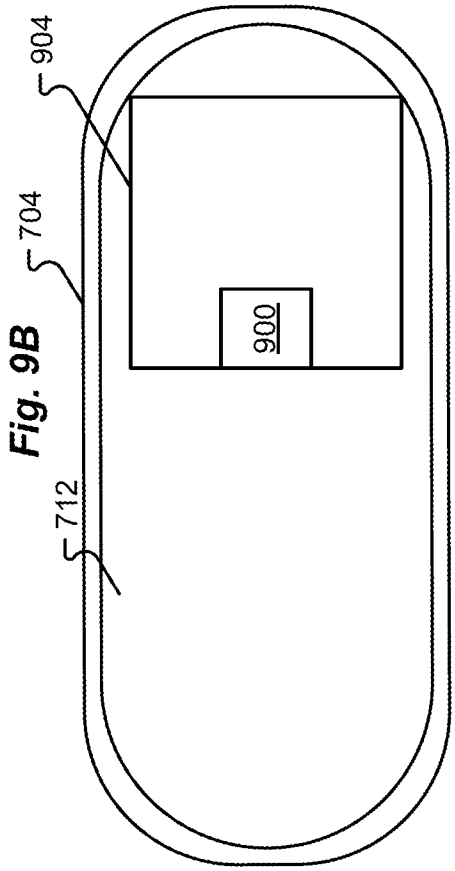

Fig. 9C

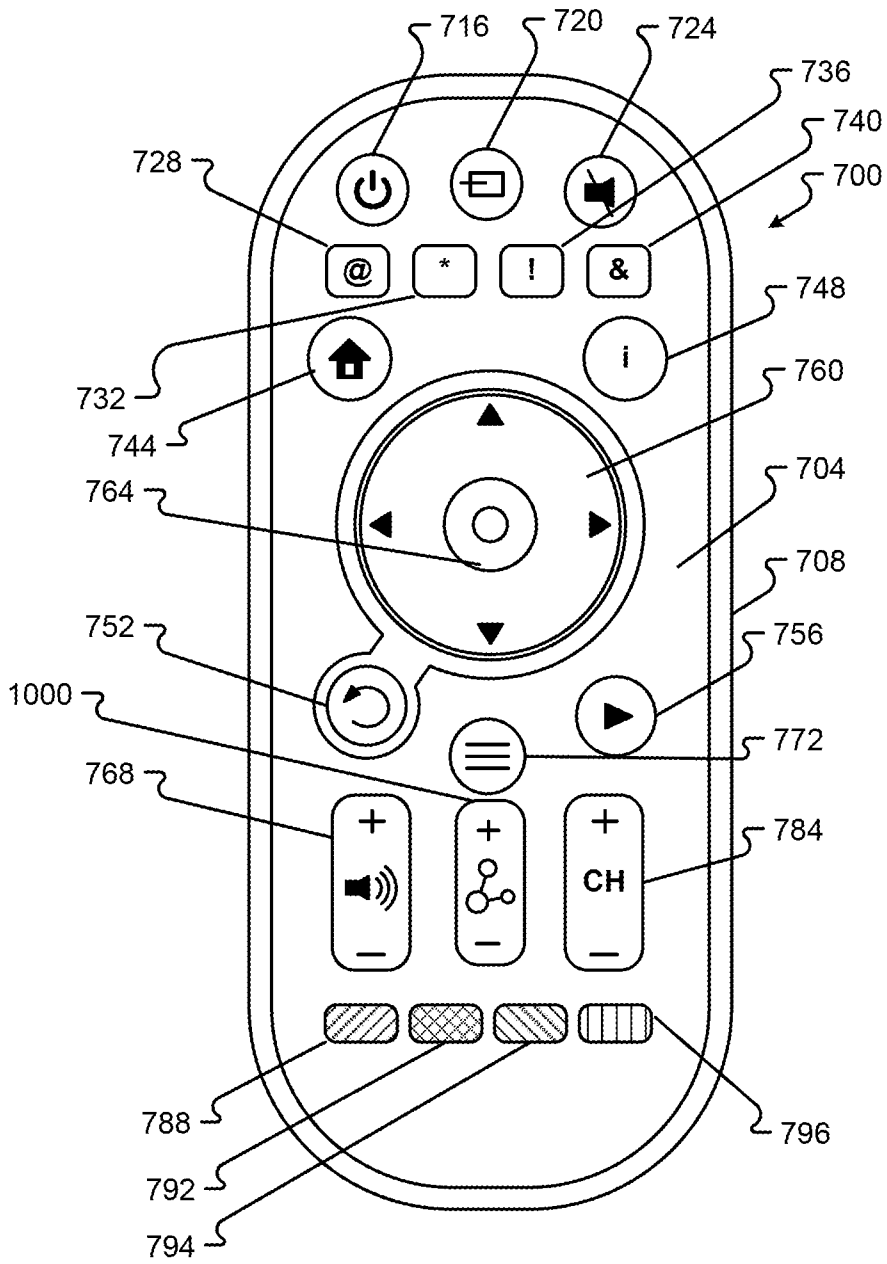
716
720
724
736
740
700
728
@
*
!
&
748
i
732
744
760
764
704
708
752
756
1000
772
768
784
CH
788
792
794
796

Fig. 10

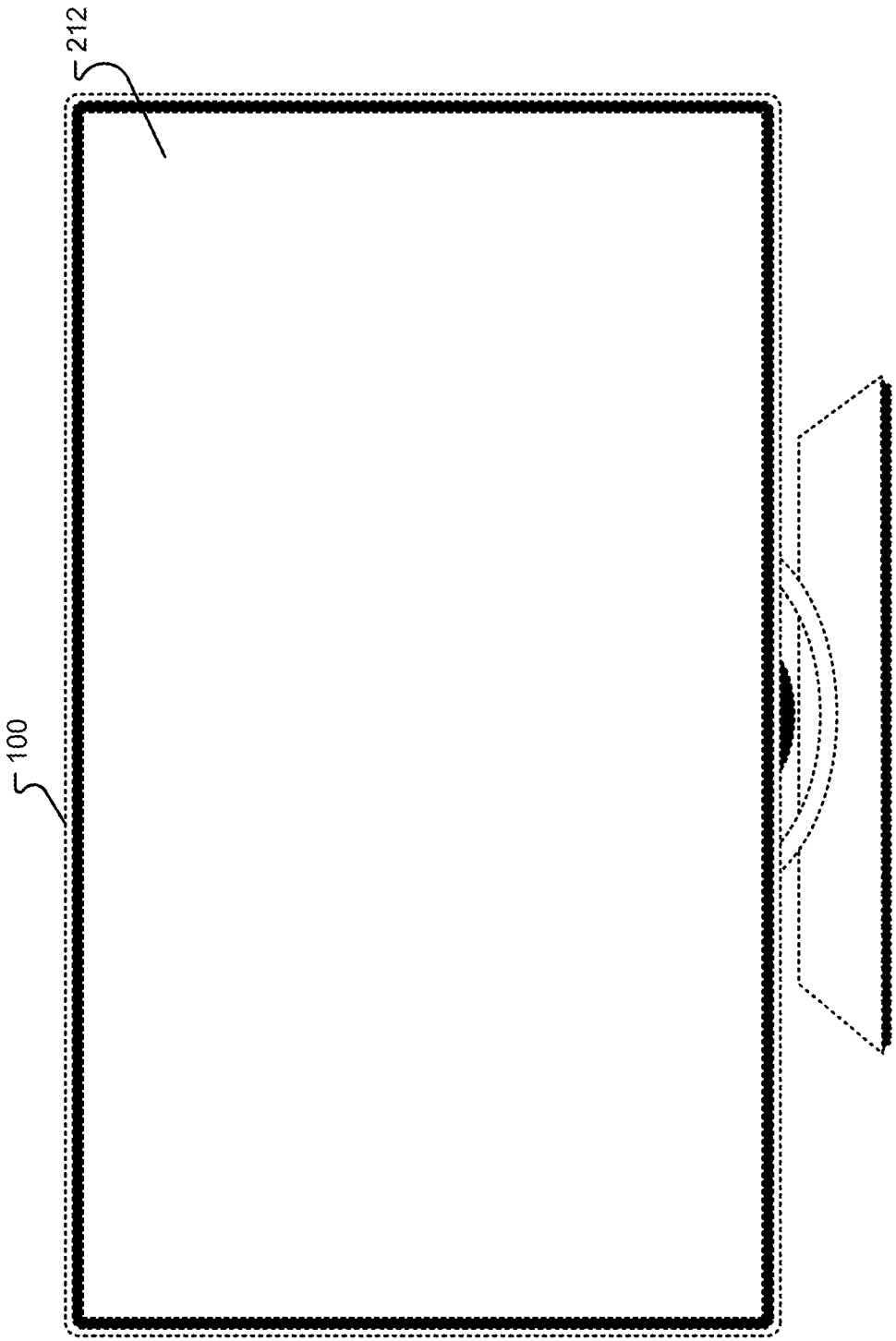

Fig. 11A

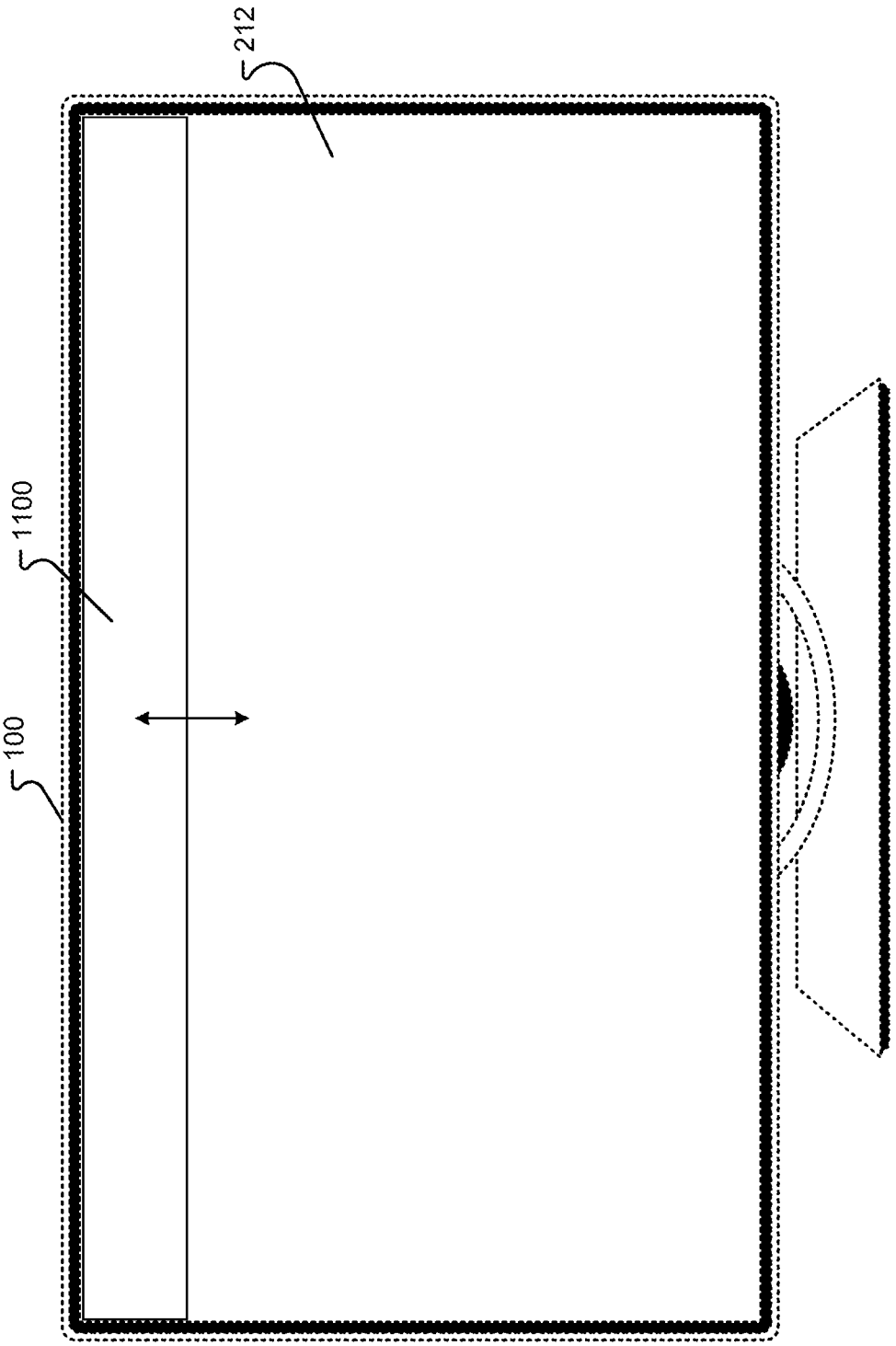

Fig. 11B

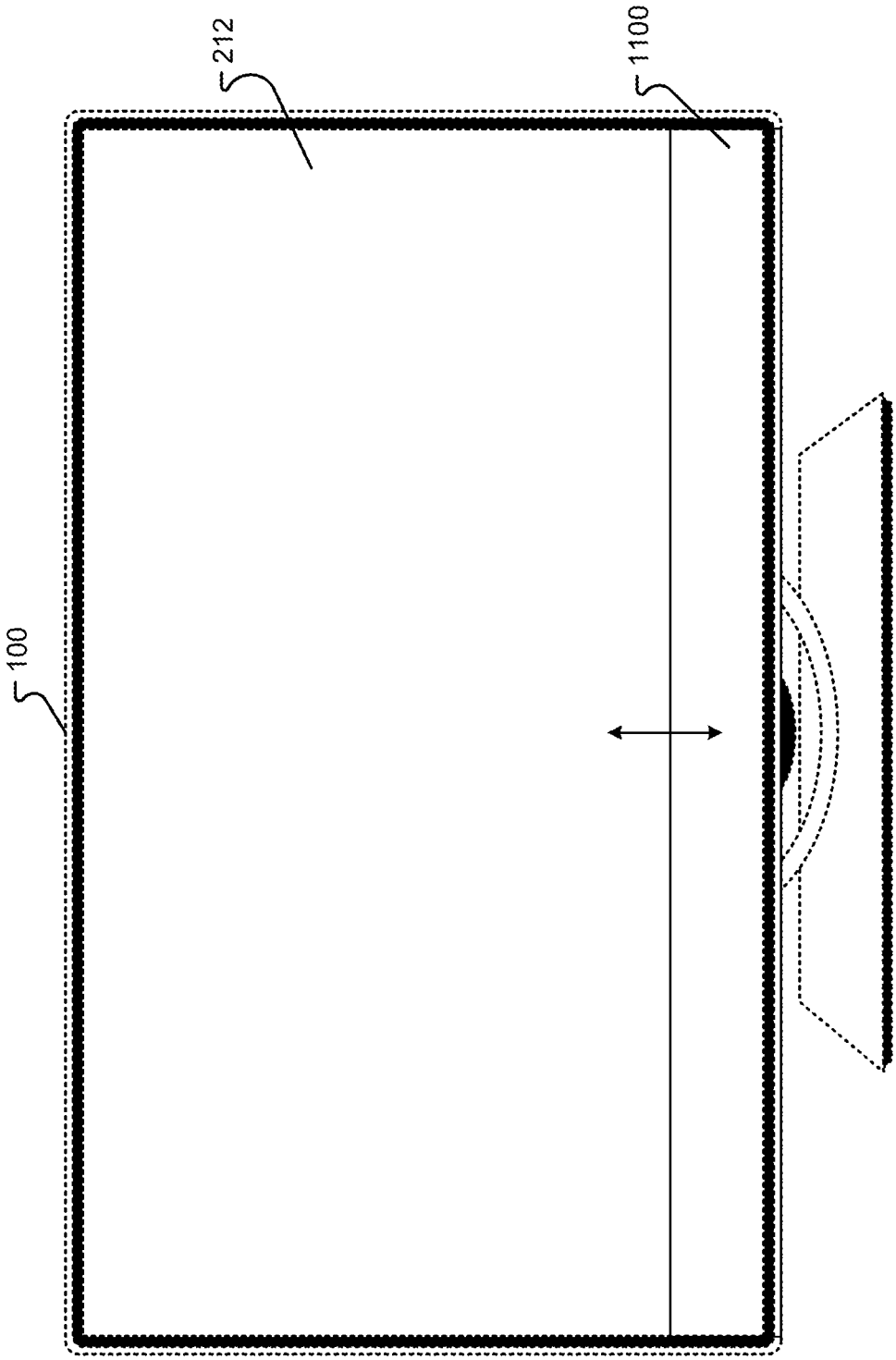

Fig. 11C

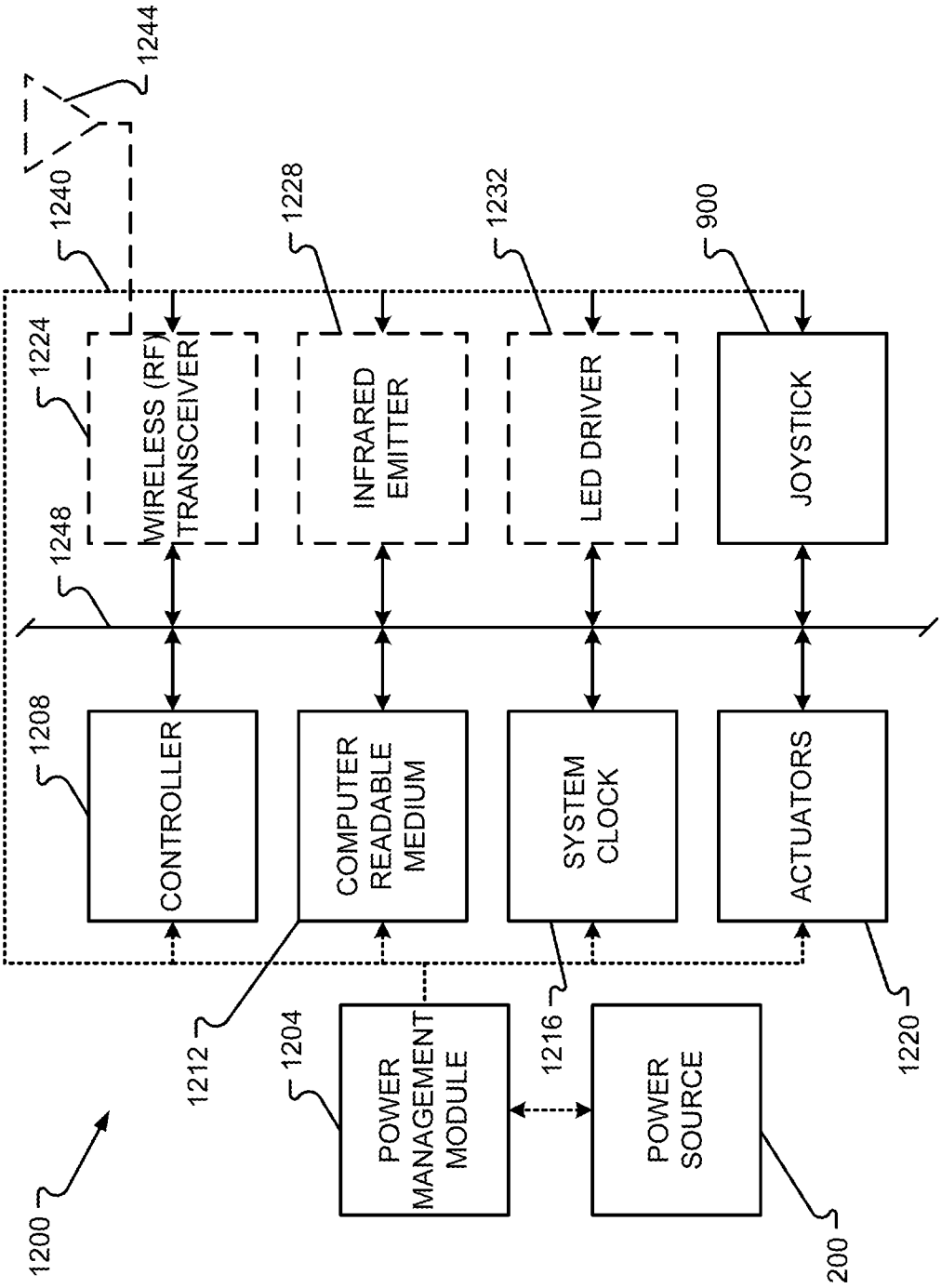
1244
1240
1228
1232
900
1224
WIRELESS (RF) TRANSCEIVER
INFRARED EMITTER
LED DRIVER
JOYSTICK
1248
1208
CONTROLLER
COMPUTER READABLE MEDIUM
SYSTEM CLOCK
ACTUATORS
1212
1204
POWER MANAGEMENT MODULE
1216
POWER SOURCE
1220
1200
1200

Fig. 12

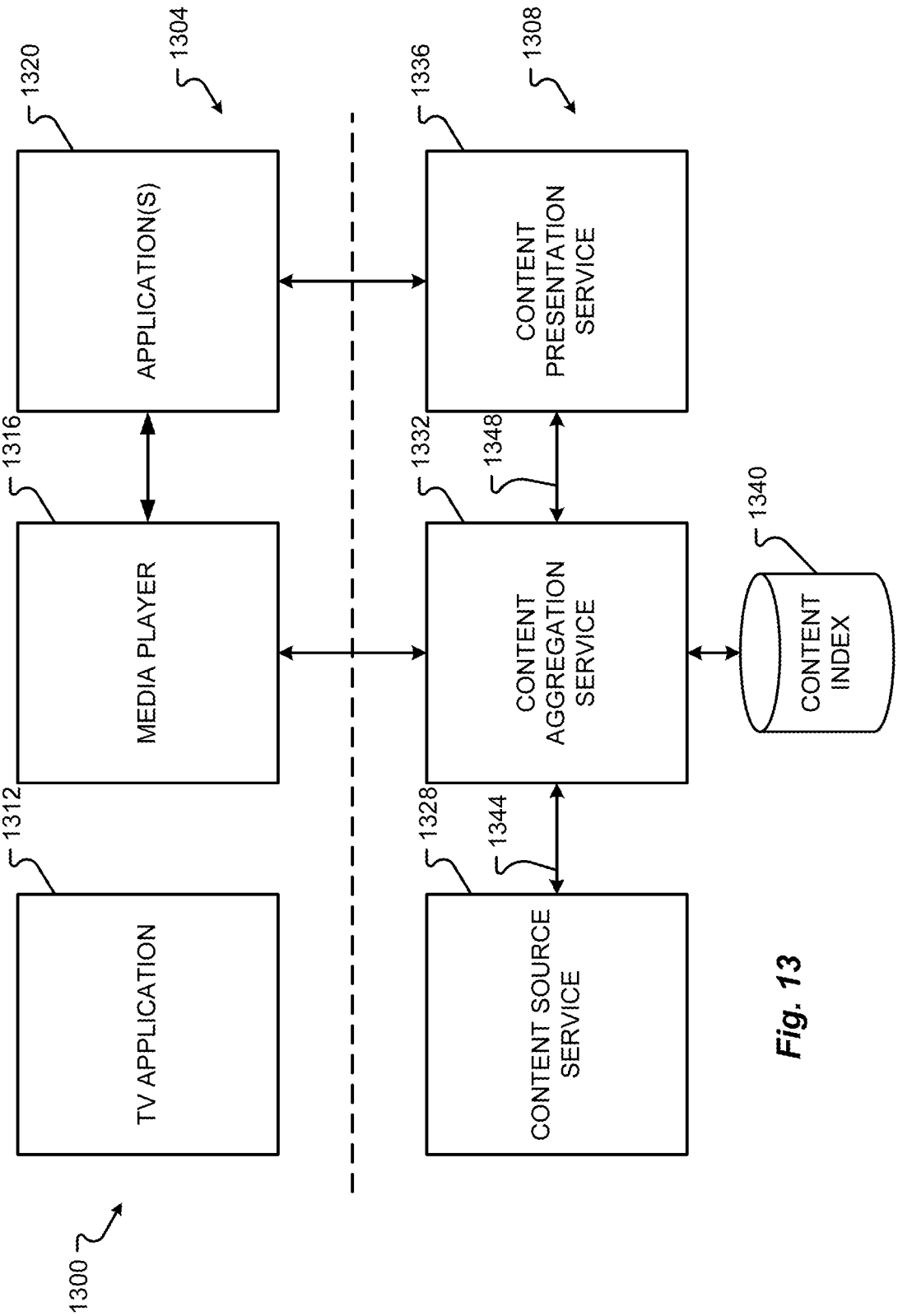
1300
1304
1308
1312
1316
1320
1328
1332
1336
1340
1344
1348
APPLICATION(S)
MEDIA PLAYER
TV APPLICATION
CONTENT PRESENTATION SERVICE
CONTENT AGGREGATION SERVICE
CONTENT SOURCE SERVICE
CONTENT INDEX

Fig. 13

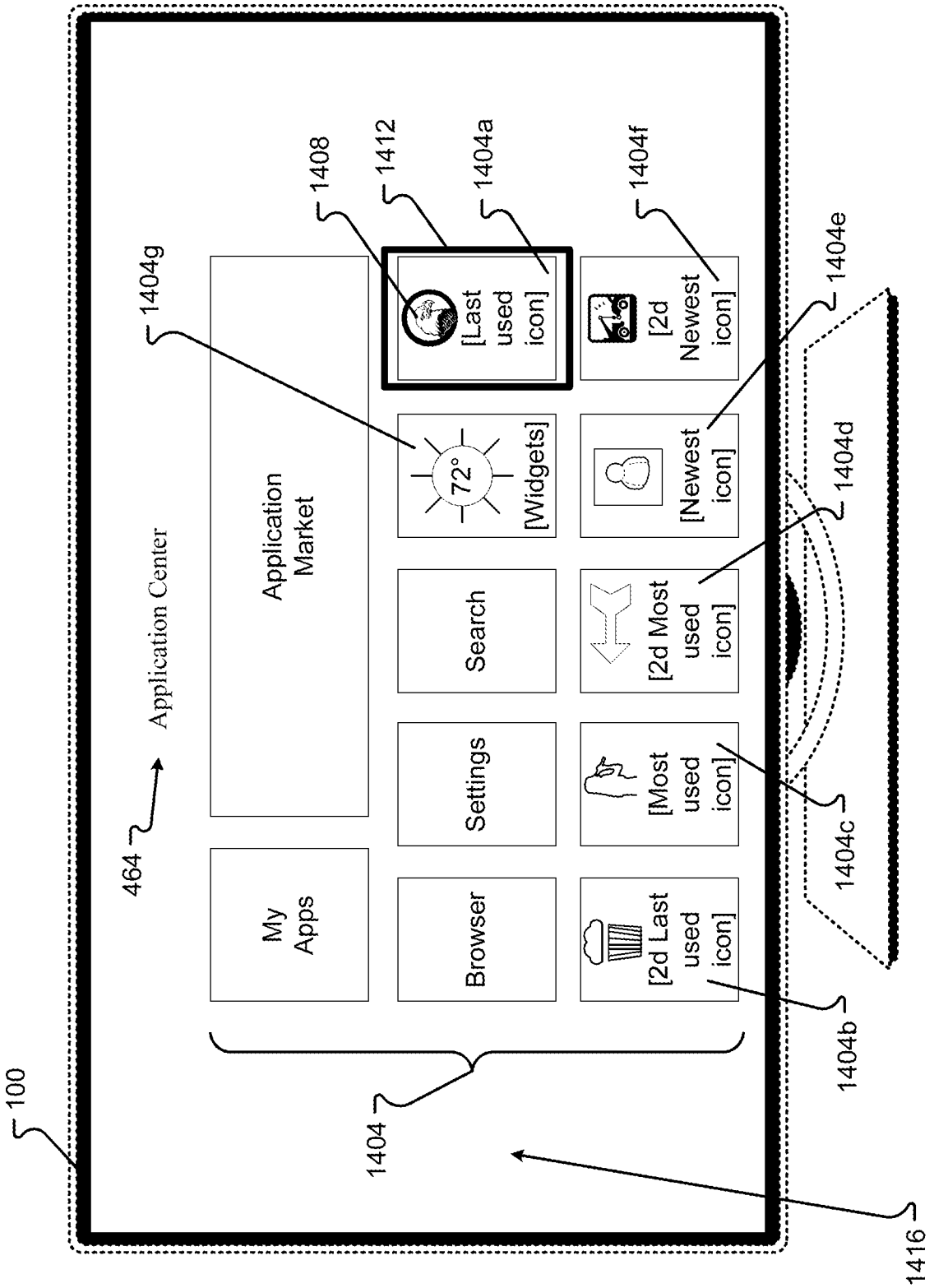
100
1404
1416
464
Application Center
My Apps
Browser
Settings
Search
Application Market
[2d Last used icon]
[Most used icon]
[2d Most used icon]
[Widgets]
[Newest icon]
[Last used icon]
[2d Newest icon]
72°
1404g
1408
1412
1404a
1404f
1404e
1404d
1404c
1404b

Fig. 14

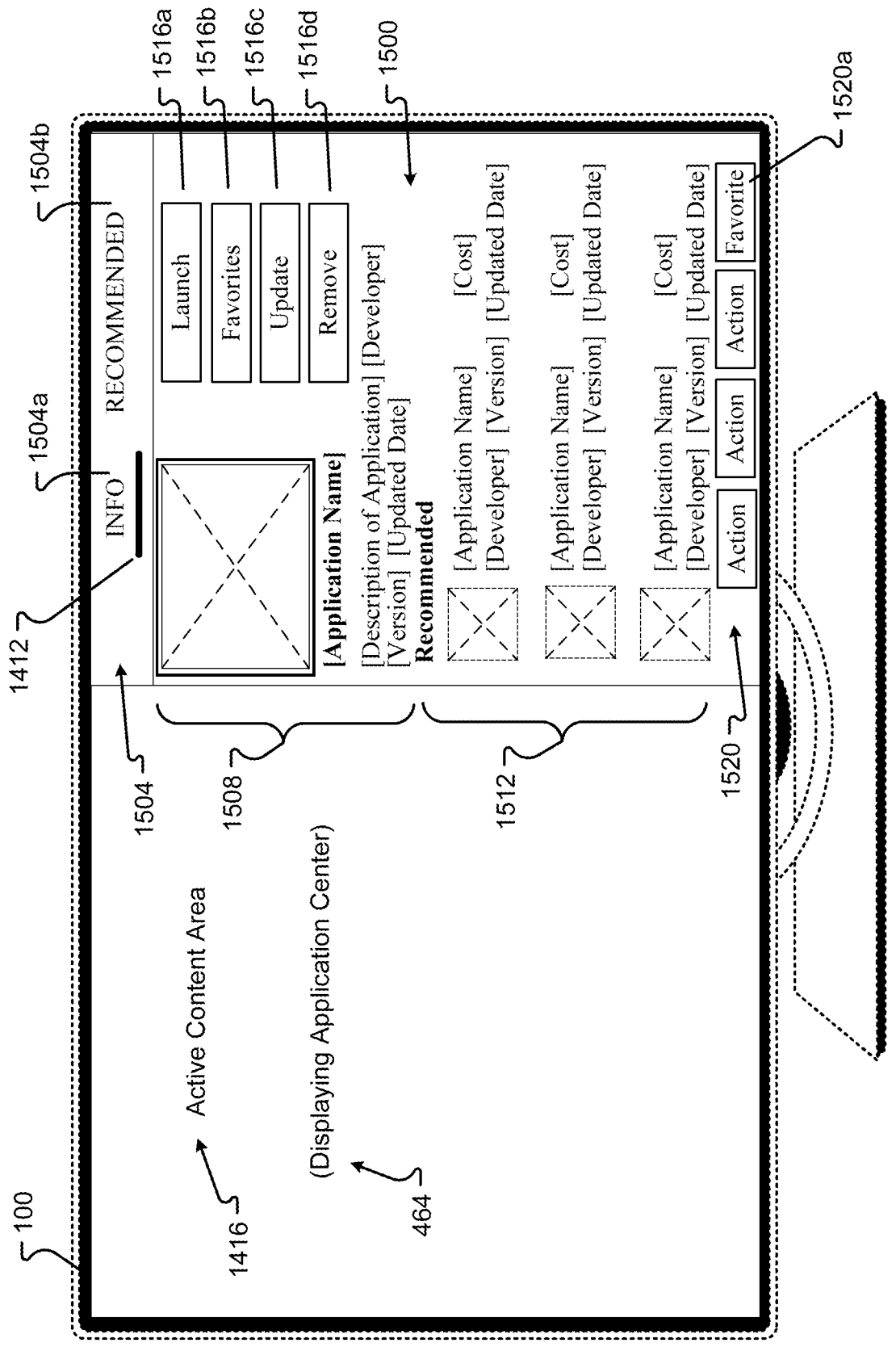
100
1504b
1504a
1412
1504
1508
1512
1520
1520a
1516a
1516b
1516c
1516d
1500
1416
464
RECOMMENDED
INFO
Active Content Area
(Displaying Application Center)
Launch
Favorites
Update
Remove
[Application Name]
[Description of Application] [Developer]
[Version] [Updated Date]
Recommended
[Application Name] [Cost]
[Developer] [Version] [Updated Date]
[Application Name] [Cost]
[Developer] [Version] [Updated Date]
[Application Name] [Cost]
[Developer] [Version] [Updated Date]
Action
Action
Action
Favorite

Fig. 15a

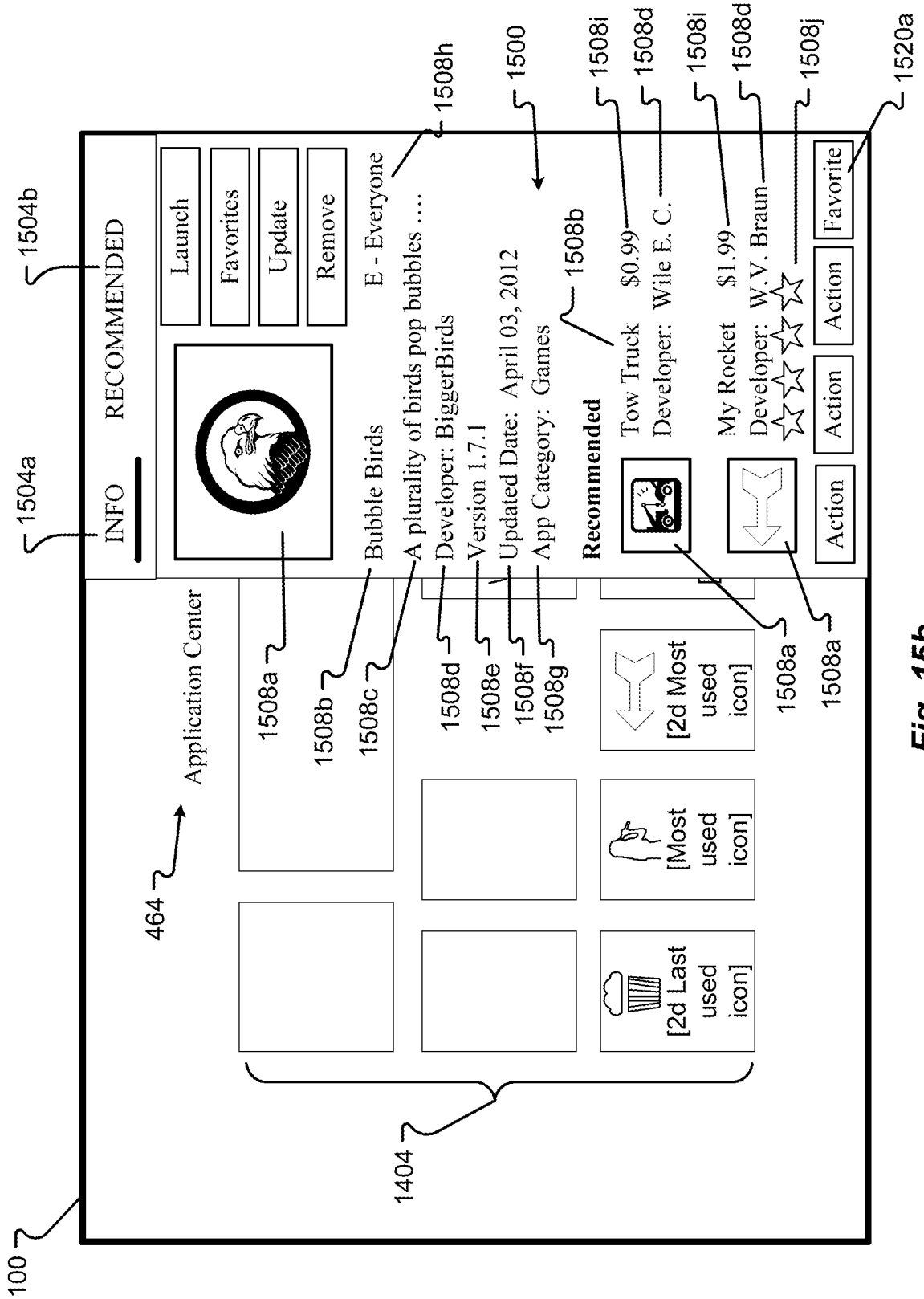
100
1504a
1504b
INFO
RECOMMENDED
Launch
Favorites
Update
Remove
E - Everyone
1508h
1500
1508i
1508d
1508i
1508d
1508j
1520a
Bubble Birds
A plurality of birds pop bubbles ....
Developer: BiggerBirds
Version 1.7.1
Updated Date: April 03, 2012
App Category: Games
1508b
Recommended
Tow Truck $0.99
Developer: Wile E. C.
My Rocket $1.99
Developer: W.V. Braun
Action
Action
Action
Favorite
Application Center
464
1508a
1508b
1508c
1508d
1508e
1508f
1508g
1508a
1508a
[2d Most used icon]
[Most used icon]
[2d Last used icon]
1404

Fig. 15b

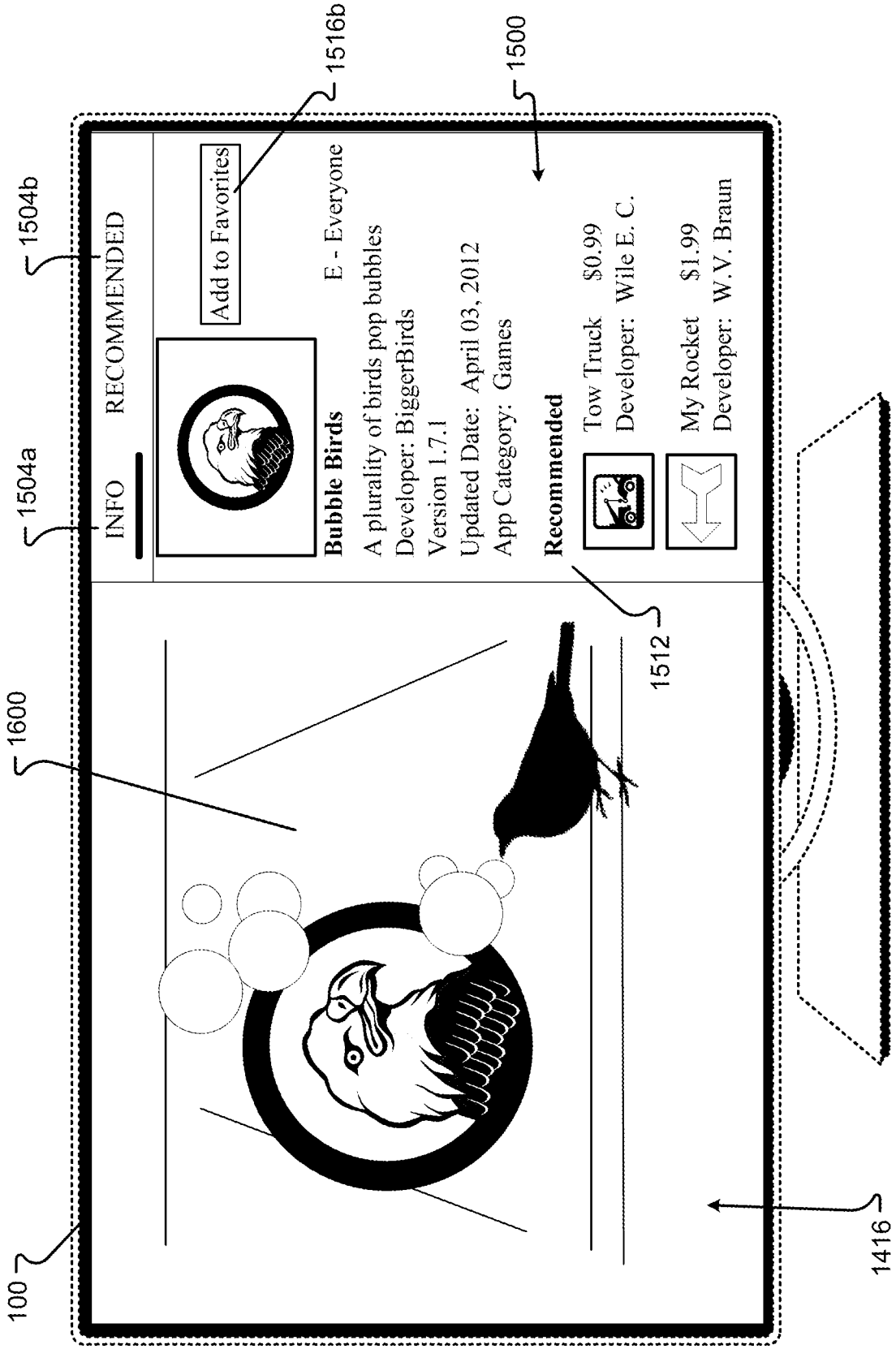
100
1504b
1504a
1600
1516b
1500
1512
1416
INFO
RECOMMENDED
Add to Favorites
Bubble Birds
E - Everyone
A plurality of birds pop bubbles
Developer: BiggerBirds
Version 1.7.1
Updated Date: April 03, 2012
App Category: Games
Recommended
Tow Truck $0.99
Developer: Wile E. C.
My Rocket $1.99
Developer: W.V. Braun

Fig. 16

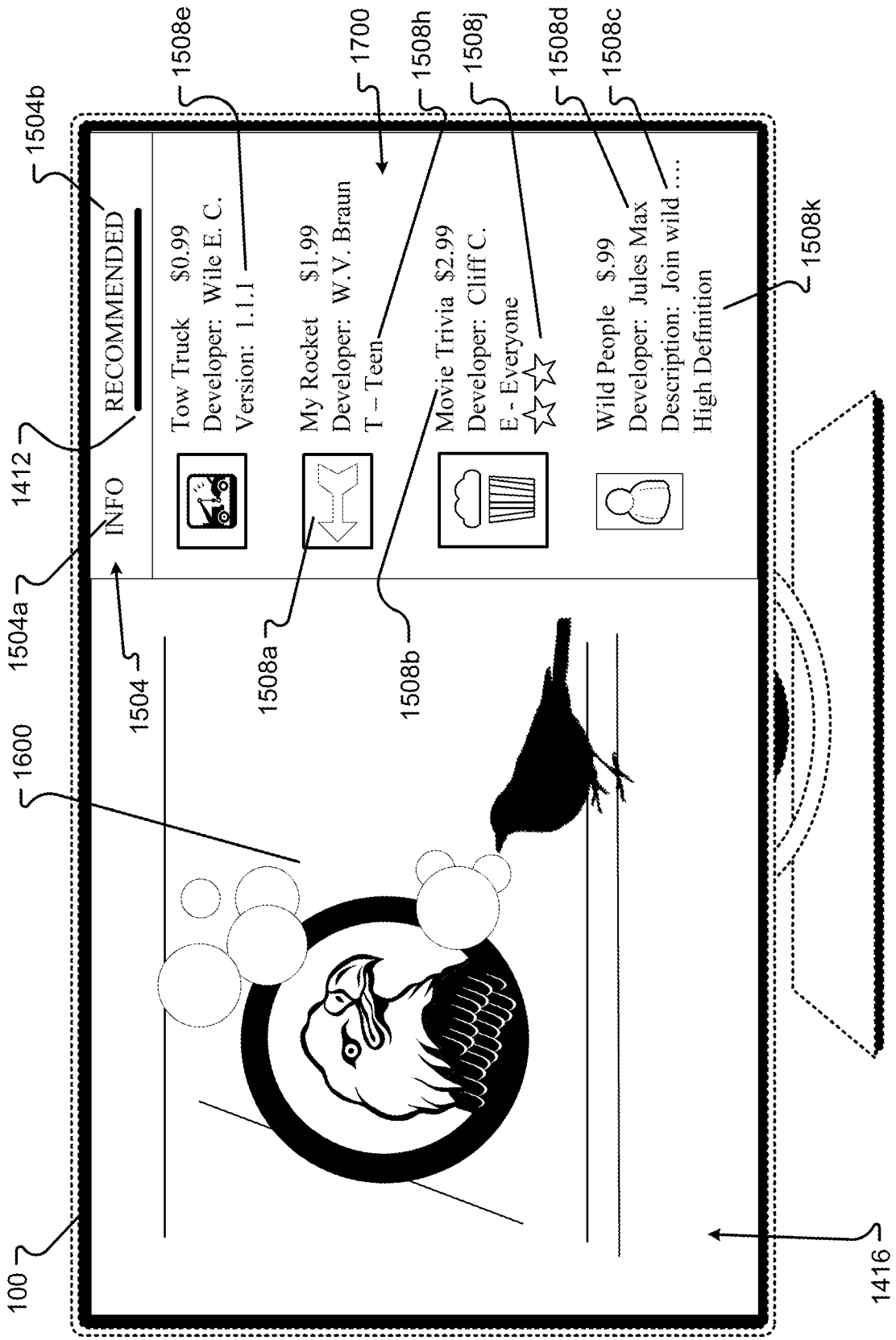
1504b
1508e
1700
1508h
1508j
1508d
1508c
RECOMMENDED
Tow Truck $0.99
Developer: Wile E. C.
Version: 1.1.1
My Rocket $1.99
Developer: W.V. Braun
T – Teen
Movie Trivia $2.99
Developer: Cliff C.
E - Everyone
Wild People $.99
Developer: Jules Max
Description: Join wild ....
High Definition
1508k
1412
INFO
1504a
1504
1508a
1508b
1600
100
1416

Fig. 17a

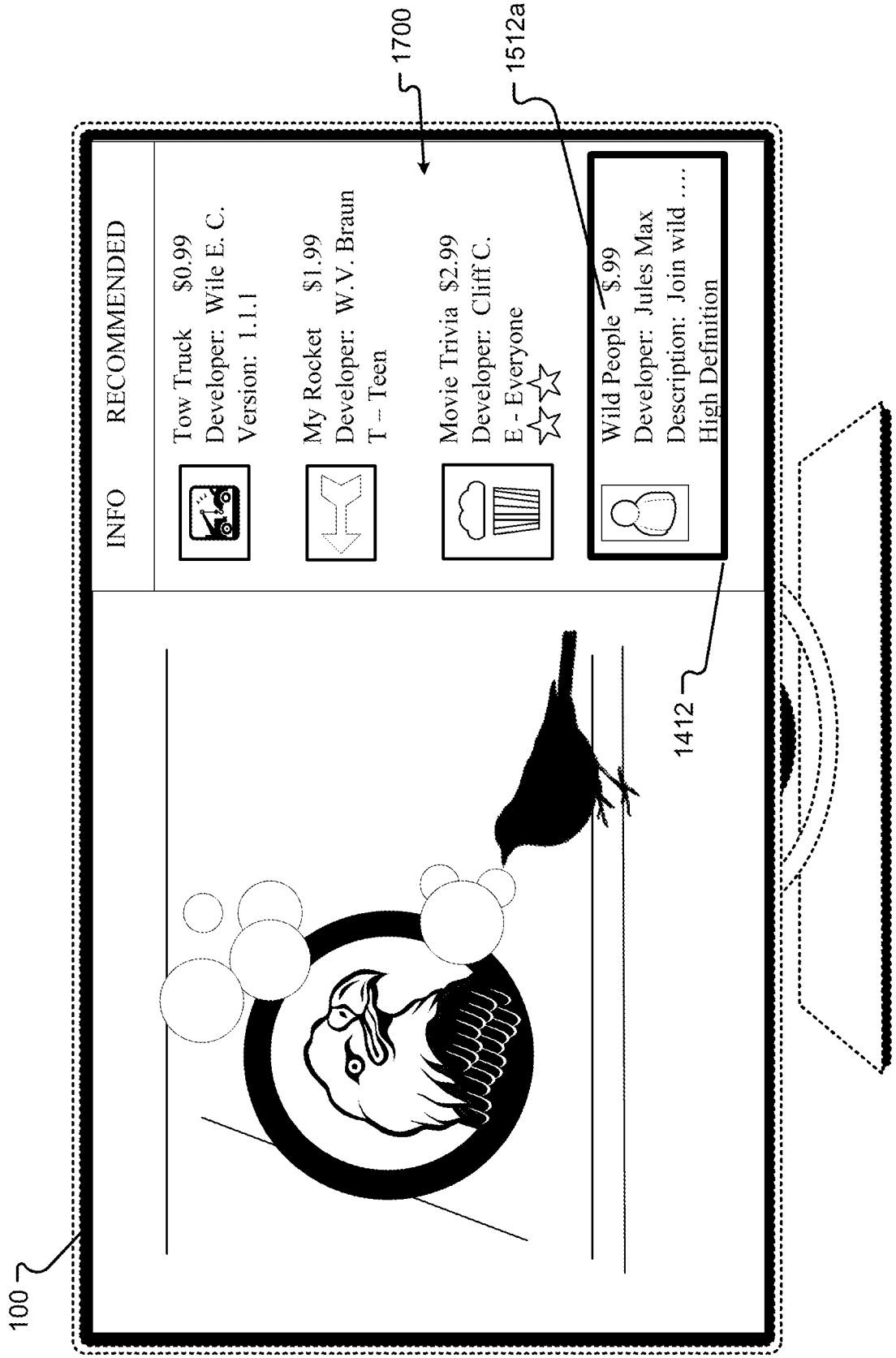
100
INFO
RECOMMENDED
Tow Truck $0.99
Developer: Wile E. C.
Version: 1.1.1
My Rocket $1.99
Developer: W.V. Braun
T – Teen
Movie Trivia $2.99
Developer: Cliff C.
E - Everyone
Wild People $.99
Developer: Jules Max
Description: Join wild ….
High Definition
1700
1512a
1412

Fig. 17b

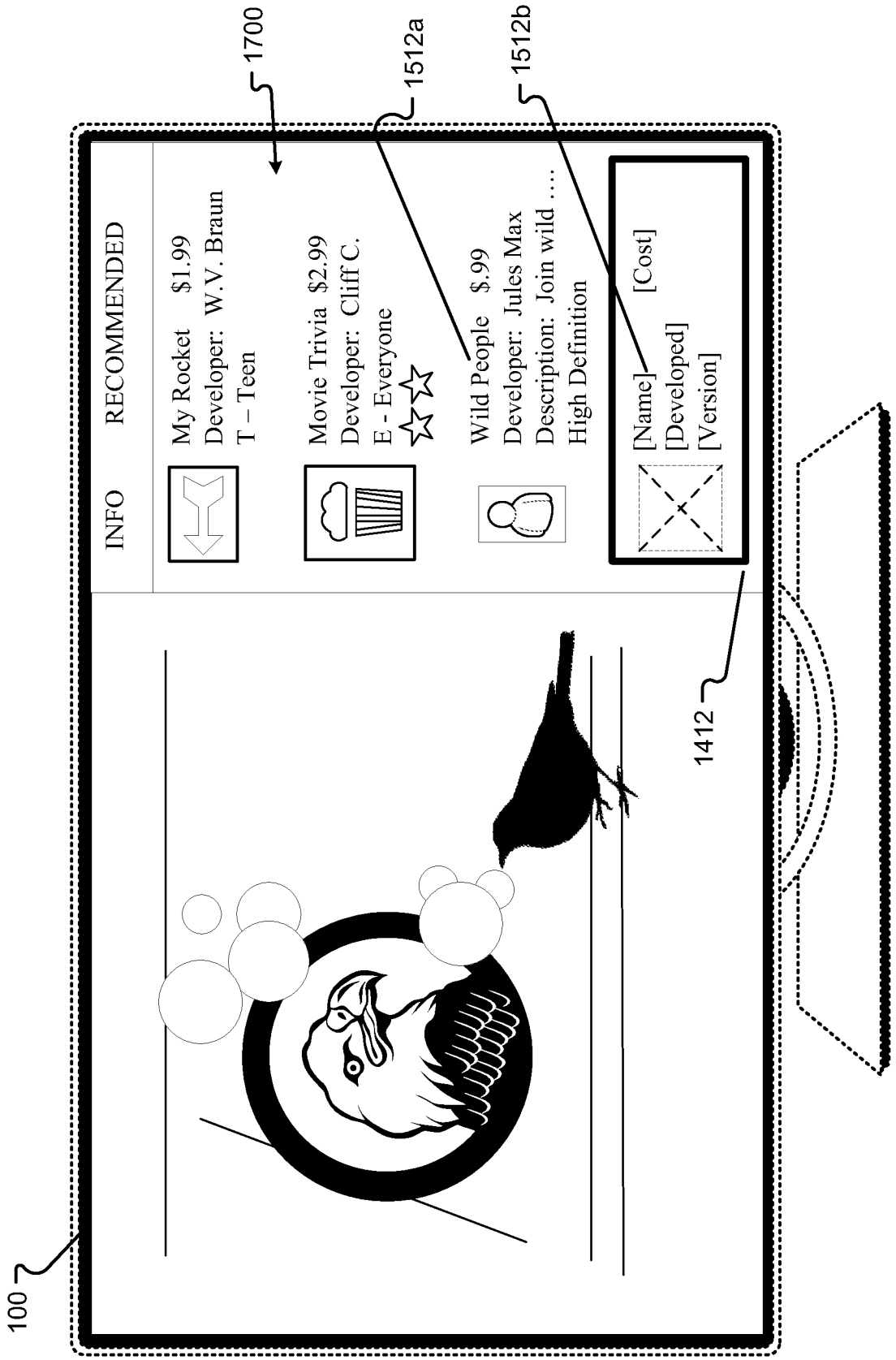
100
1700
1512a
1512b
1412
INFO
RECOMMENDED
My Rocket $1.99
Developer: W.V. Braun
T – Teen
Movie Trivia $2.99
Developer: Cliff C.
E - Everyone
Wild People $.99
Developer: Jules Max
Description: Join wild ….
High Definition
[Name]
[Cost]
[Developed]
[Version]

Fig. 17c

1700
INFO
RECOMMENDED
Tow Truck $0.99
Developer: Wile E. C.
Version: 1.1.1
My Rocket $1.99
Developer: W.V. Braun
T – Teen
Movie Trivia $2.99
Developer: Cliff C.
E - Everyone
Wild People $.99
Developer: Jules Max
Description: Join wild ….
High Definition
1512c
1412
100

Fig. 17d

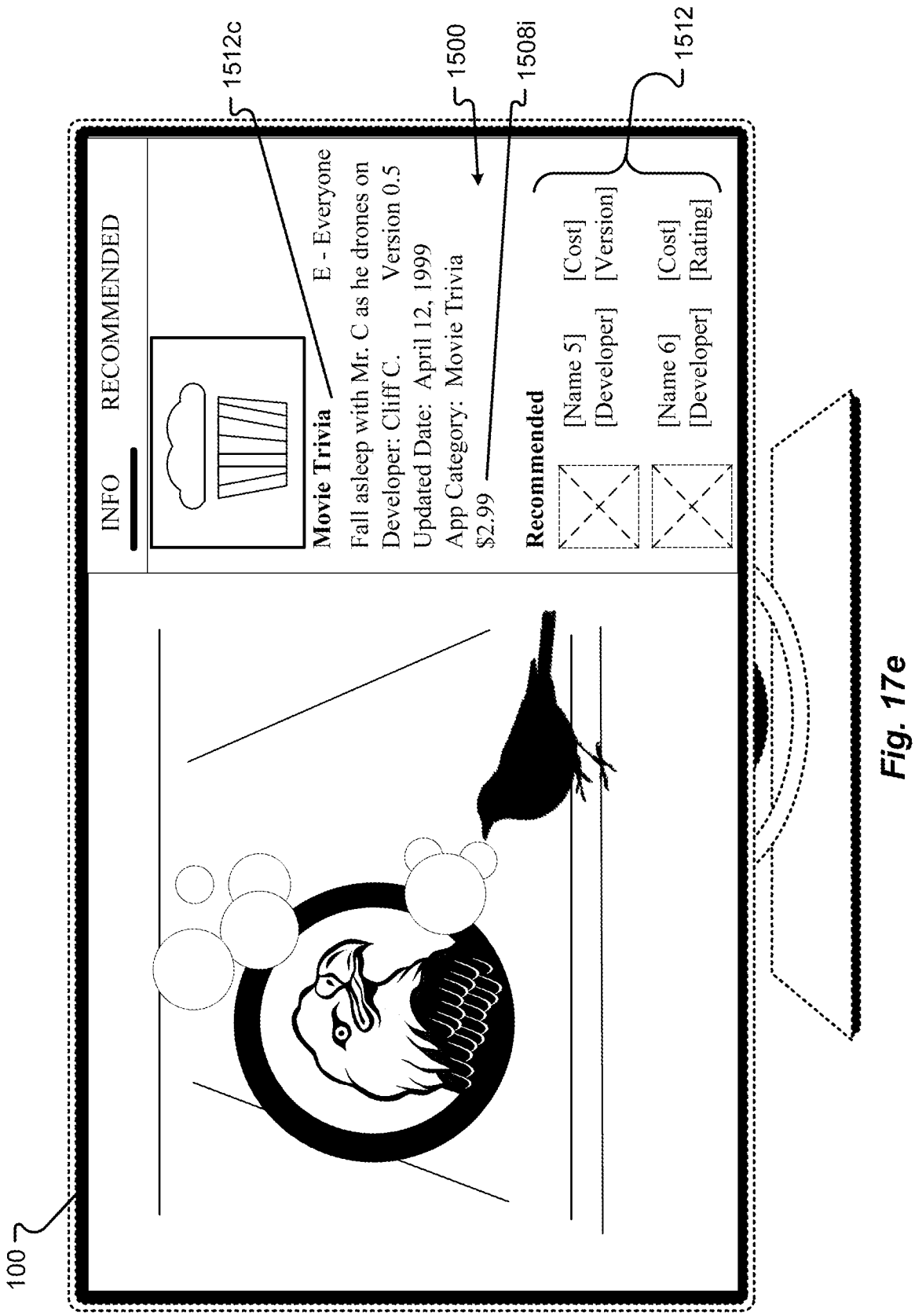
100
INFO
RECOMMENDED
1512c
1500
1508i
1512
Movie Trivia
E - Everyone
Fall asleep with Mr. C as he drones on
Developer: Cliff C.
Version 0.5
Updated Date: April 12, 1999
App Category: Movie Trivia
$2.99
Recommended
[Name 5]
[Developer]
[Cost]
[Version]
[Name 6]
[Developer]
[Cost]
[Rating]

Fig. 17e

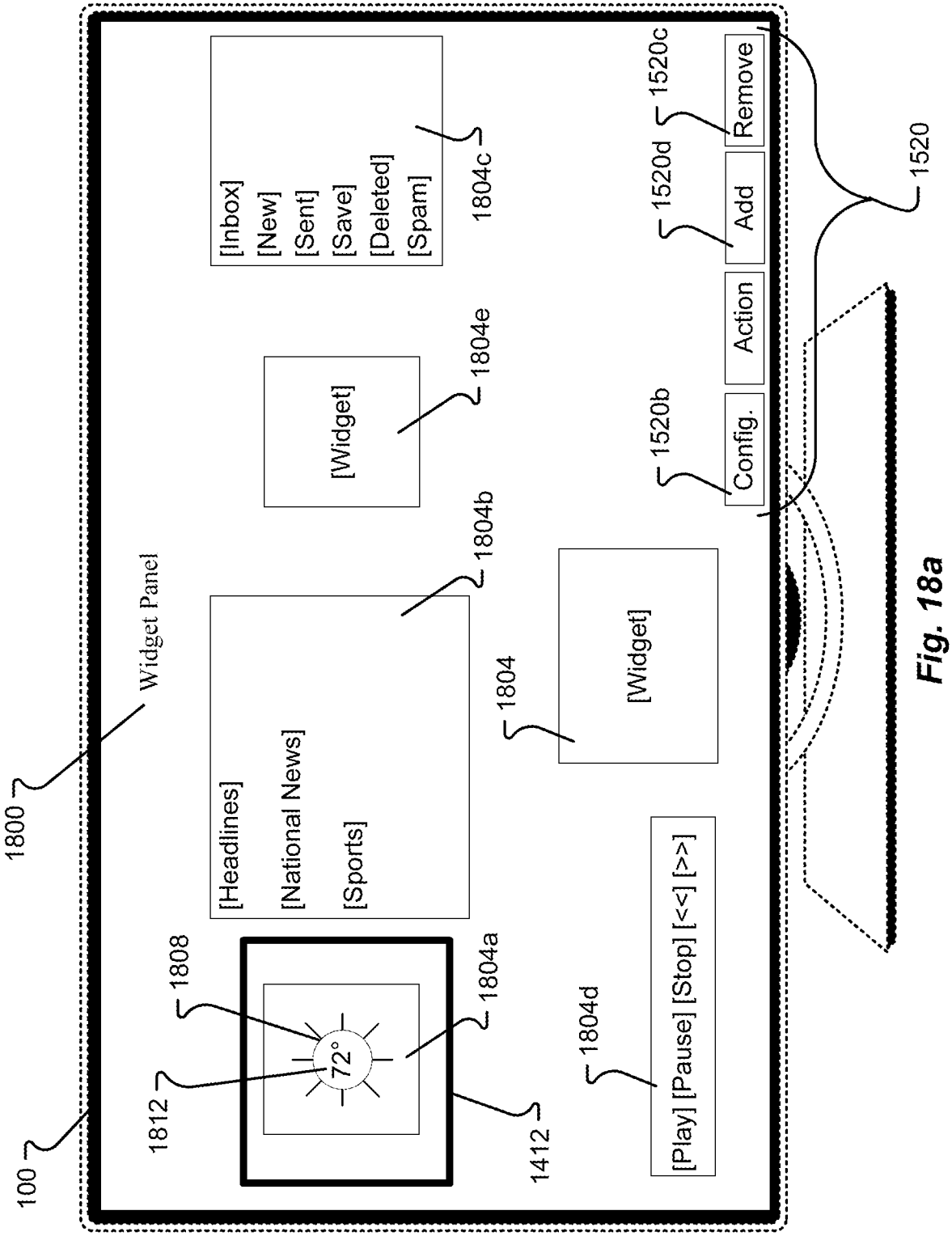
100
1800
Widget Panel
1812
1808
72°
1804a
1412
[Headlines]
[National News]
[Sports]
1804b
[Widget]
1804
[Play] [Pause] [Stop] [<<] [>>]
1804d
[Inbox]
[New]
[Sent]
[Save]
[Deleted]
[Spam]
1804c
[Widget]
1804e
Config.
Action
Add
Remove
1520b
1520d
1520c
1520

Fig. 18a

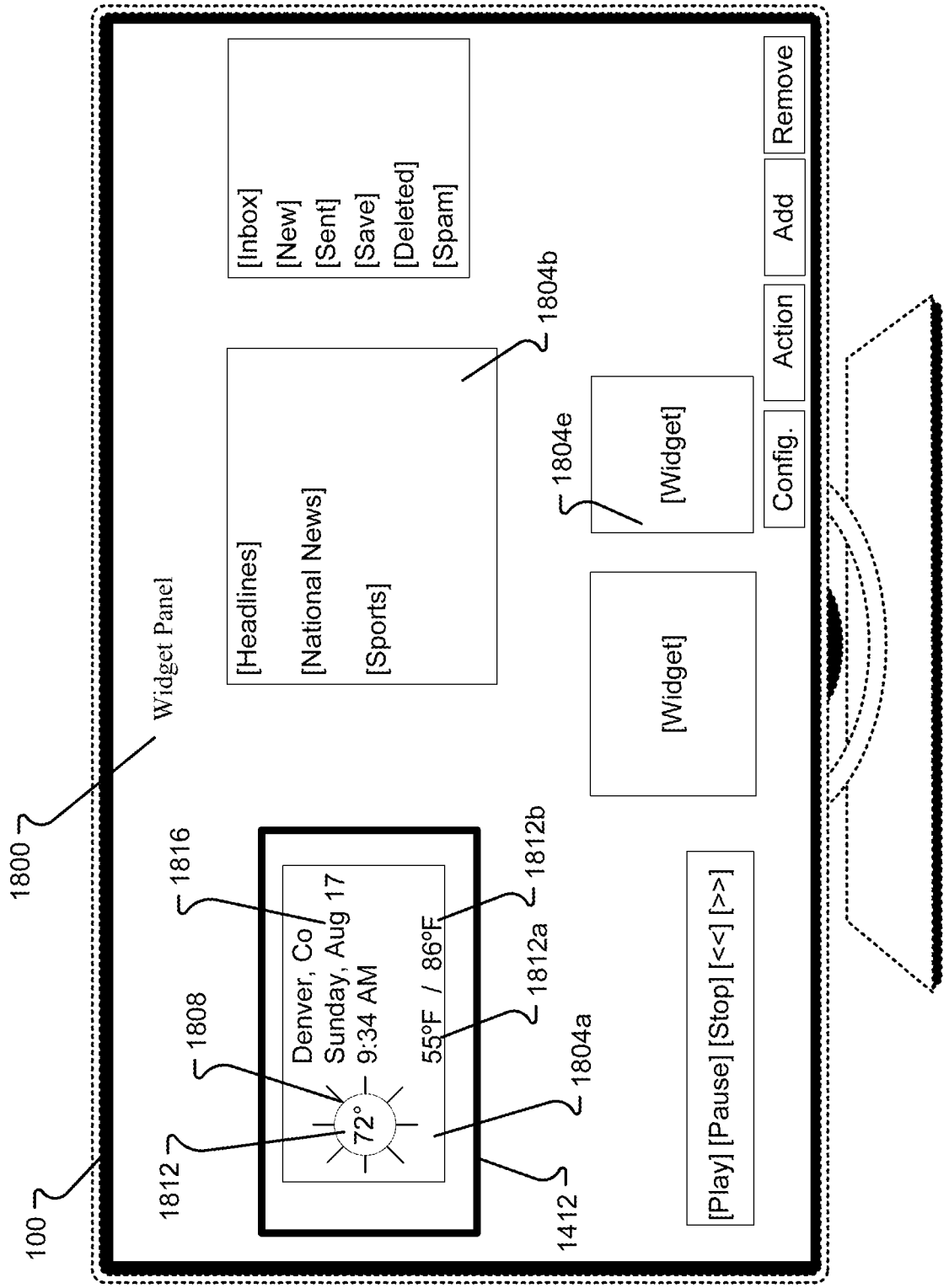
100
1800
Widget Panel
1812
1808
1816
Denver, Co
Sunday, Aug 17
9:34 AM
72°
55°F / 86°F
1812a
1812b
1804a
1412
[Play] [Pause] [Stop] [<<] [>>]
[Widget]
1804e
[Widget]
1804b
[Headlines]
[National News]
[Sports]
[Inbox]
[New]
[Sent]
[Save]
[Deleted]
[Spam]
Config.
Action
Add
Remove

Fig. 18b

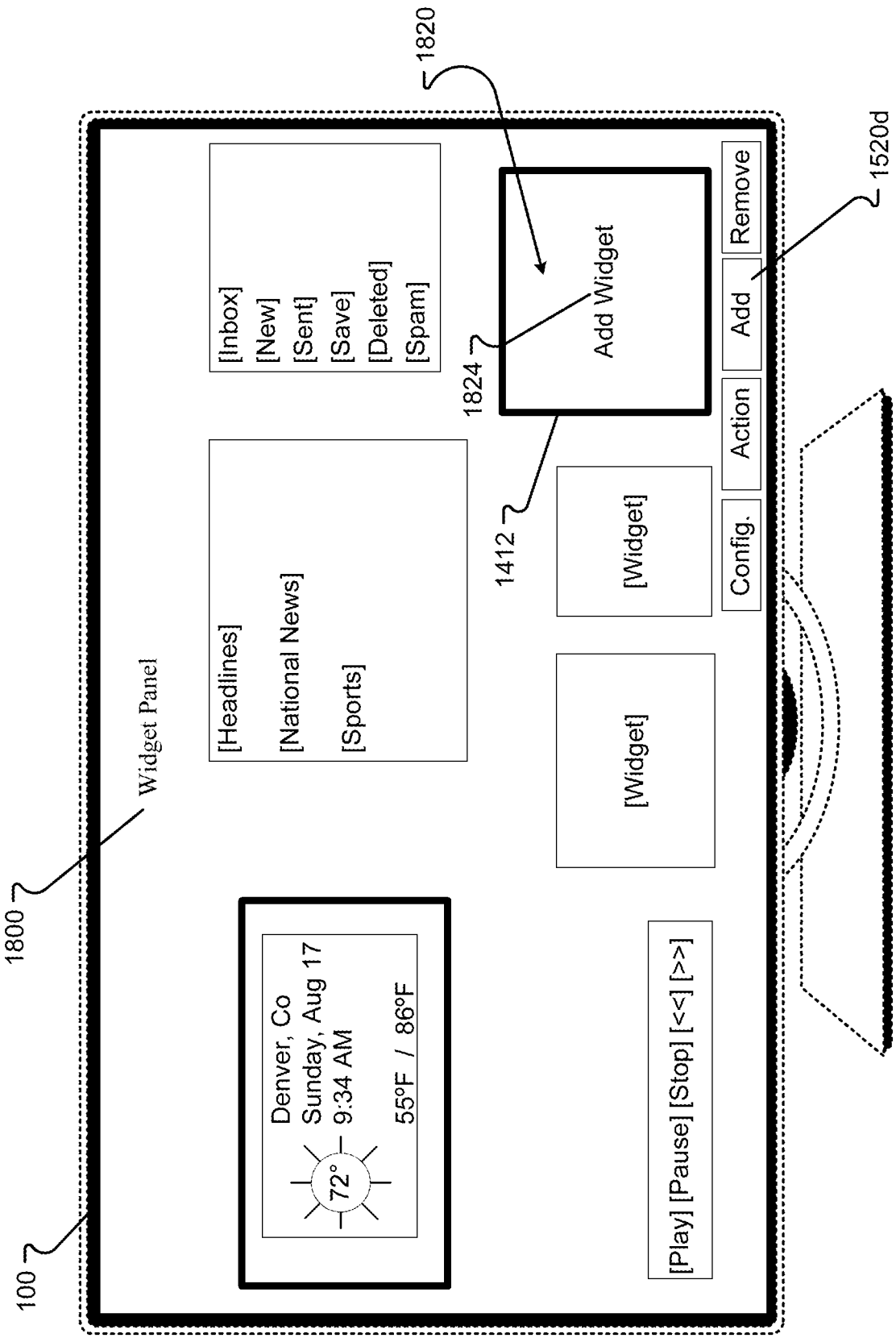
1820
1520d
Widget Panel
1800
100
[Inbox]
[New]
[Sent]
[Save]
[Deleted]
[Spam]
1824
Add Widget
Remove
Add
Action
Config.
1412
[Widget]
[Widget]
[Headlines]
[National News]
[Sports]
Denver, Co
Sunday, Aug 17
9:34 AM
72°
55°F / 86°F
[Play] [Pause] [Stop] [<<] [>>]

Fig. 18c

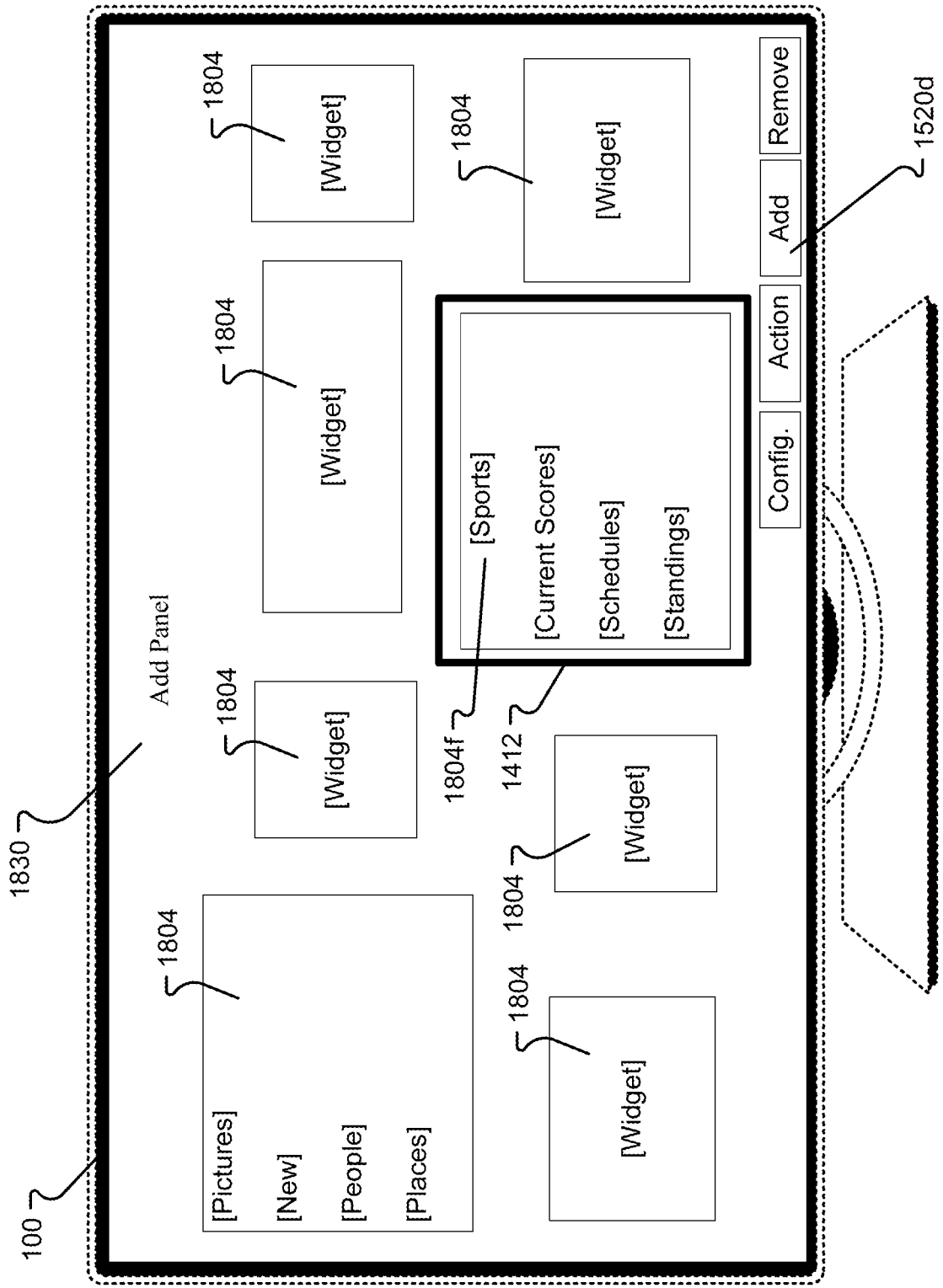
100
1830
Add Panel
[Pictures]
[New]
[People]
[Places]
1804
[Widget]
1804
[Widget]
1804
[Widget]
1804
[Widget]
1804
[Widget]
1804f
[Sports]
[Current Scores]
[Schedules]
[Standings]
1412
Config.
Action
Add
Remove
1520d

Fig. 18d

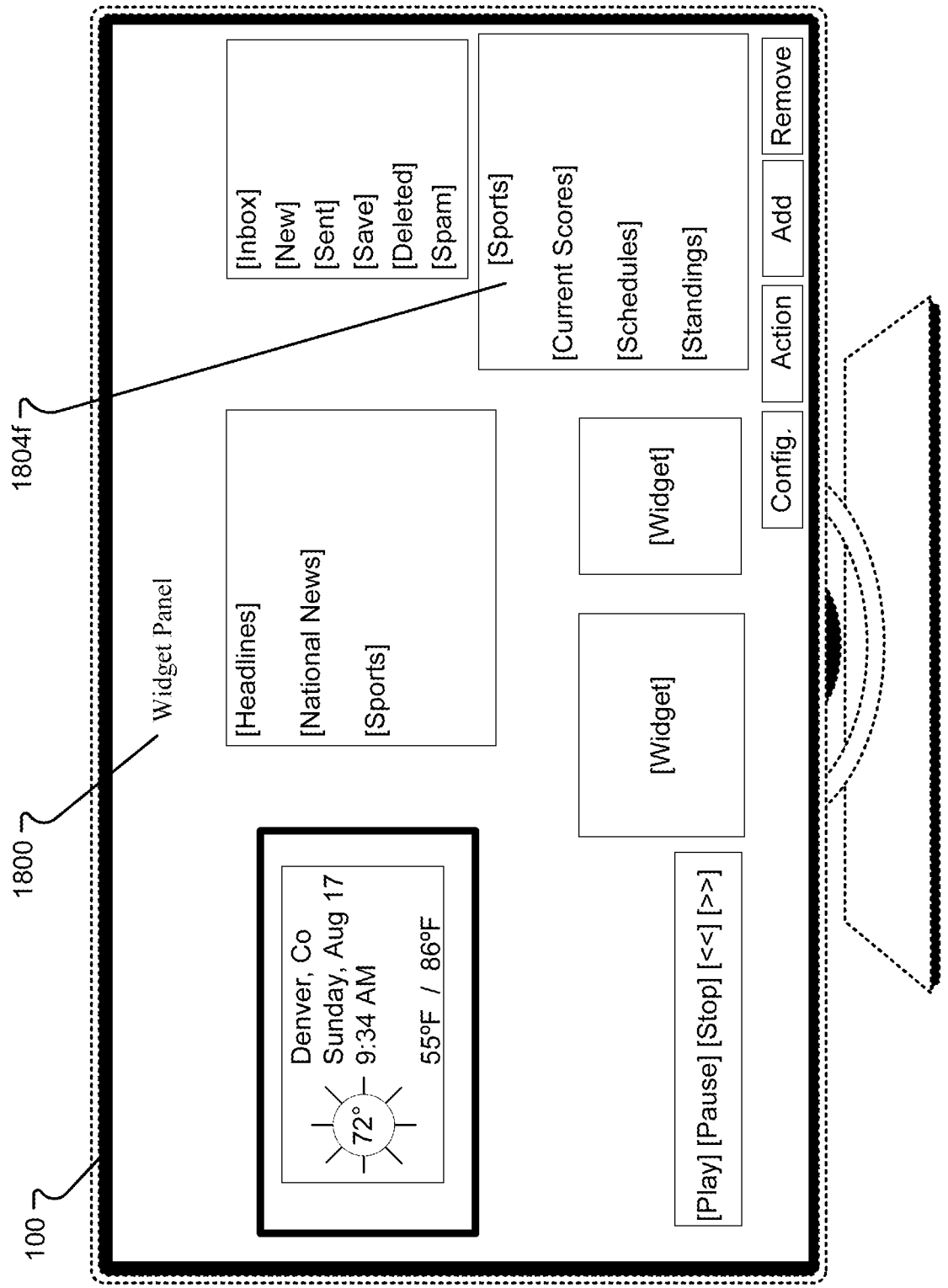
100
1800
Widget Panel
1804f
Denver, Co
Sunday, Aug 17
9:34 AM
72°
55°F / 86°F
[Headlines]
[National News]
[Sports]
[Inbox]
[New]
[Sent]
[Save]
[Deleted]
[Spam]
[Sports]
[Current Scores]
[Schedules]
[Standings]
[Widget]
[Widget]
[Play] [Pause] [Stop] [<<] [>>]
Config.
Action
Add
Remove

Fig. 18e

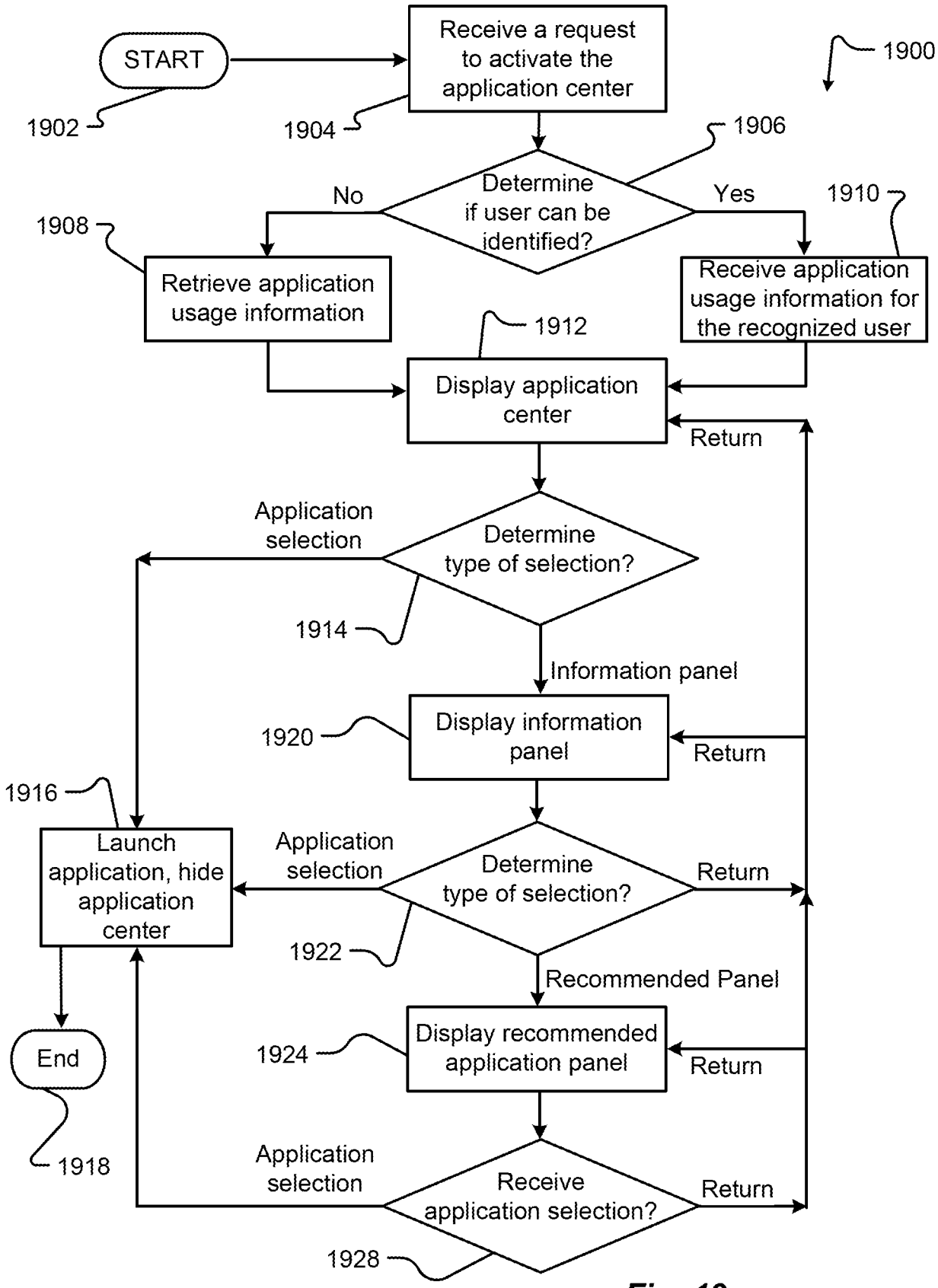
START
Receive a request to activate the application center
1900
1902
1904
1906
Determine if user can be identified?
No
Yes
1910
1908
Retrieve application usage information
Receive application usage information for the recognized user
1912
Display application center
Return
Application selection
Determine type of selection?
1914
Information panel
1920
Display information panel
Return
1916
Launch application, hide application center
Application selection
Determine type of selection?
Return
1922
Recommended Panel
End
1924
Display recommended application panel
Return
1918
Application selection
Receive application selection?
Return
1928

Fig. 19

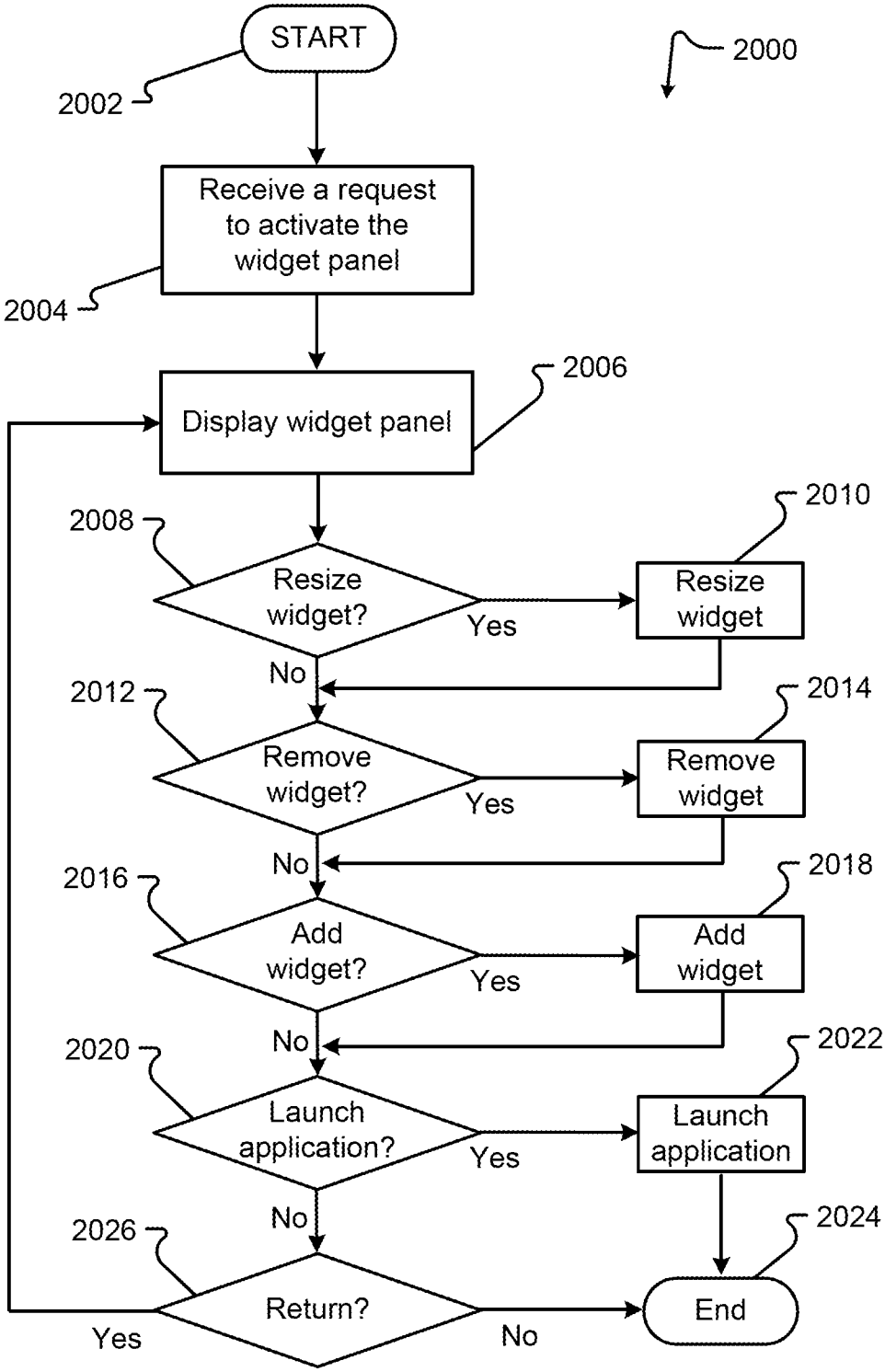
START
2000
2002
Receive a request to activate the widget panel
2004
Display widget panel
2006
2008
Resize widget?
Yes
2010
Resize widget
No
2012
Remove widget?
Yes
2014
Remove widget
No
2016
Add widget?
Yes
2018
Add widget
No
2020
Launch application?
Yes
2022
Launch application
No
2024
2026
Return?
Yes
No
End

Fig. 20