G. E. GRAHAM.

TOILET DEVICE.

APPLICATION FILED JAN. 20, 1912.

**1,106,300.** Patented Aug. 4, 1914.

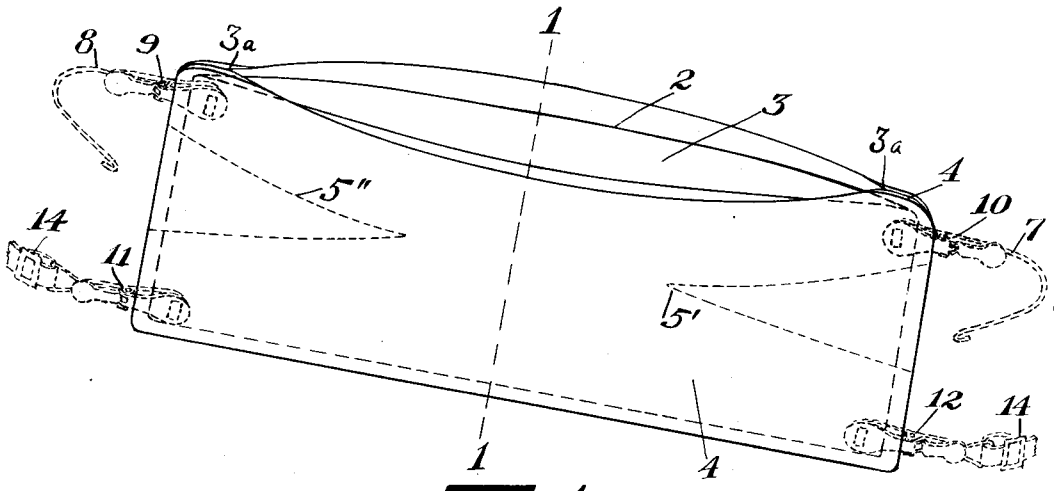


Fig. 1.

Fig. 3.

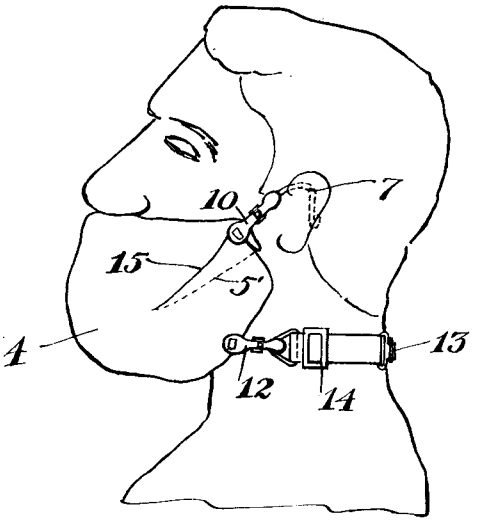


Fig. 2.

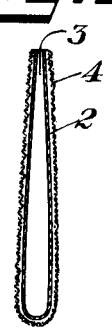


Fig. 4.

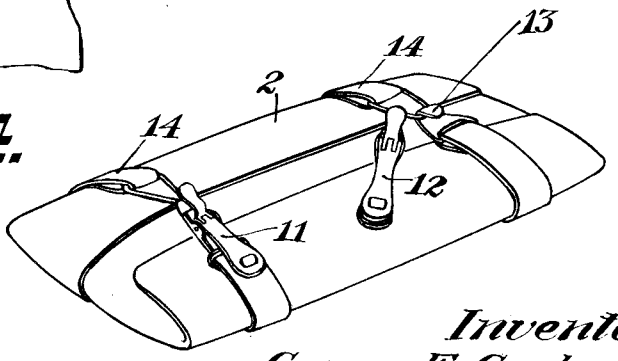


Witnesses:

Peter Howey.

H. D. Penner

Inventor:

George E. Graham.

By his Attorney, F. H. Richards.

# UNITED STATES PATENT OFFICE.

GEORGE E. GRAHAM, OF CANDOR, NEW YORK, ASSIGNOR TO WILLIAM J. PAYNE, OF CANDOR, NEW YORK.

## TOILET DEVICE.

1,106,300. Specification of Letters Patent. Patented Aug. 4, 1914.

Application filed January 20, 1912. Serial No. 672,449.

*To all whom it may concern:*

Be it known that I, GEORGE E. GRAHAM, a citizen of the United States, residing in Candor, in the county of Tioga and State of New York, have invented certain new and useful Improvements in Toilet Devices, of which the following is a specification.

The object of my present invention is to provide a toilet device adapted to be used by travelers and to economize their time, and to these ends combining in itself an absorbent member usable as a wash-cloth, beard-softener and compress; a member constituting a water and heat proof lining adapted to retain heat and moisture in the absorbent member, in contact with the skin, when it is in use and at other times a water-proof envelop in which the absorbent member may be packed for transportation immediately after its use without losing time by waiting for it to dry, quickly and in the least possible space so that the packed device may be carried with clothing or other articles without danger of wetting them; and means for quickly, conveniently and comfortably retaining the device in proper position in contact with the skin, when it is in use.

In the accompanying drawings, Figure 1 is a perspective view of my device ready for use as a beard softener. Fig. 2 is a sectional view taken on line 1—1, Fig. 1. Fig. 3 shows the application of the device to the face. Fig. 4 shows the device folded into a compact package with the water-proof container on the outside.

The principal elements of my device are an absorbent member 4, made of absorbent fibrous material, such as Turkish toweling or similar cloth, or felt, preferably in the shape of an oblong bag with a mouth 3 on one long edge and a water- and heat-proof member 2, made of two thicknesses of rubber or other material having such qualities, with an air-space between them, preferably in the shape of a bag somewhat smaller than and adapted to be placed in and lie smoothly within the absorbent member 4, and likewise having one open side so that the absorbent member may be conveniently packed within it for transportation.

In order that the member 2 may be safely confined within and not accidentally fall out of the member 4 when used as its lining, the mouth 3 of the absorbent member is made somewhat shorter than the edge in which it is located.

As is usual in bag-making cloth, preferably of proper width so to do, is folded, the folds are sewed at the ends and inwardly along the mouthed side to the desired locations of the mouth-ends $3^a$, and the envelop is turned, so that its edges will be smooth. Thus the envelop 4 is formed with a mouth 3 shorter than its mouthed edge and better adapted to retain the water-proof member 2, when lined therewith, because the ends thereof will extend beyond the ends of the mouth 3 as illustrated in full and dotted lines in Fig. 1.

When my device is used as a beard softener, it is desirable that it should substantially conform to the contour of the face, and to that end it is desirable to fold it to reduce its width at its ends, and in order that this may be quickly and effectively done, I outline the gores or folds desirable to be taken up by converging lines 5′, 5″, stitched or woven in the cloth, with or without a colored thread, such lines serving as folding-lines, and shown unfolded in Fig. 1 and folded, at 15, in Fig. 3.

To facilitate the use of my device as a beard-softener, I provide earhooks, 7 and 8, with attached clips 9 and 10 of any proper type, detachably connected with and adjustable on the envelop or absorbent member 4, by which it may be made to fit and be securely held against the face, being hung upon the ears by the hooks 7 and 8; and I provide strap members, 14, preferably elastic, likewise provided with clips 11, 12, and thereby detachably and adjustably connected with said member 4, and having take-up buckles, if so desired, and a clasp, 13, by which the strap members may be connected, as shown in Fig. 3; the said strap members serving to hold the device firmly and elastically in position when in use, and when it is packed, serving to secure the package, as shown in Fig. 4. When the envelop 4 is used as a wash-cloth the other elements are detached and removed from it.

When the envelop is used as a beard-softener, the water-proof member 2 is placed within the absorbent member 4, the latter being adjusted to fit the face comfortably by folding it along the lines 5′, 5″, and properly attaching the hook members 7 and 8 by means of their clips 9 and 10, which

latter also retain the desired gores or folds in the member 4 and thus cause it to have a concave side adapted to fit the face, and likewise attaching the strap members 14. This concave side of the member 4 is then saturated with hot water and the device is applied to the face, as above set forth. The member 2 and the air space inclosed in it will confine the heat and moisture so that the outer surface of the absorbent member will remain practically dry, except as it absorbs water by capillary attraction from the wetted portion, around the edges of the member 2, and thus prevent water from dripping from the absorbent member upon the person of the user.

As is well known, moisture combined with heat make the hair or beard soft and distend the hairs with water so that they may be easily cut, and thus my device makes the operation of shaving easy, without the use of other means except a razor. After such use of my device, the attaching and supporting members may be detached and the water-proof member 2 removed from the absorbent member, which may then be folded and without any loss of time packed in the water-proof member along with the ear hooks and their attached clips, and the package may be made secure with the strap-members 14, as shown in Fig. 4, ready for transportation in a hand bag or other like container, without endangering the other articles therein.

Having thus described my invention, I claim:—

1. A toilet device of the class described comprising an oblong absorbent envelop with a mouth shorter than the side in which it is formed and end folding gore markings and a non-absorbent envelop adapted to line, and to extend beyond the ends of the mouth of said absorbent envelop.

2. A combined wash-cloth and beard-softener comprising an oblong absorbent envelop with a mouth shorter than the side in which it is formed and end folding-gore markings, a non-absorbent and non-conducting envelop adapted to line, and to extend beyond the ends of the mouth of said absorbent envelop, and attachably and adjustably connected with said absorbent envelop, a pair of ear hooks and an elastic band.

3. A toilet device of the class described comprising an absorbent envelop formed by folding a cloth, sewing its ends and short distances inwardly therefrom along its mouthed side and marking end folding gores upon its sides, and a non-absorbent envelop adapted to line said absorbent envelop and to be retained therein by extending beyond the ends of the mouth thereof.

4. In a toilet device of the class described the combination of an absorbent envelop formed by folding an oblong piece of Turkish toweling, sewing its ends and relatively short distances inwardly therefrom along its mouthed side to form a mouth substantially centrally located in and shorter than said side, said inwardly-extended joining adapted to retain a lining member in the envelop; and a non-absorbent envelop adapted to line and lie flat in said absorbent envelop, to be retained therein by said inwardly extended jointures and to serve as an envelop to contain said absorbent envelop, for transporting the same.

GEORGE E. GRAHAM.

Witnesses:
JAMES HOLLENBECK,
HOMER F. BROWN.