(12) UK Patent Application (19) GB (11) 2481801 (13) A

(43) Date of A Publication 11.01.2012

(21) Application No: 1011283.7

(22) Date of Filing: 05.07.2010

(71) Applicant(s):
**Acergy France SA**
**(Incorporated in France)**
**1 Quai Marcel Dassault, 92150 Suresnes, France (including Overseas Departments and Territories)**

(72) Inventor(s):
**Philippe Hoffman**

(74) Agent and/or Address for Service:
**Keltie LLP**
**Fleet Place House, 2 Fleet Place, LONDON, EC4M 7ET, United Kingdom**

(51) INT CL:
***F16L 58/10*** (2006.01) ***B28B 21/74*** (2006.01)

(56) Documents Cited:
**EP 0654632 A2** **WO 2006/060209 A1**
**DE 102007018519 A1** **US 5489405 A**
**US 5127116 A**

(58) Field of Search:
INT CL **B28B, F16L**
Other: **WPI, EPODOC**

(54) Title of the Invention: **Techniques for coating pipes**
Abstract Title: **Techniques for coating pipes**

(57) A method of coating a field joint of a pipeline to accelerate the cycle time comprising positioning a mould tool 32 around the field joint to define a mould cavity 40 and injecting plastics material into the mould cavity 40 through a plurality of gates 56 in the mould tool, spaced along the mould cavity. The material is injected through different gates at different times as the mould cavity is filled, specifically through at least one first gate to advance a melt front within the mould cavity, and subsequently through at least one second gate spaced from the first gate, preferably when the melt front passes the second gate. First and second mould tools may be positioned successively around the field joint to create inner and outer coatings on the field joint. An insert may be positioned in the mould cavity to be embedded in the injected plastics material.

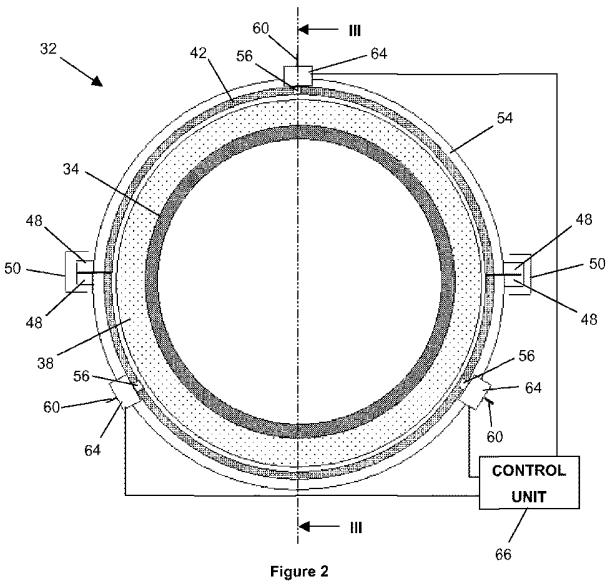


Figure 2

GB 2481801 A

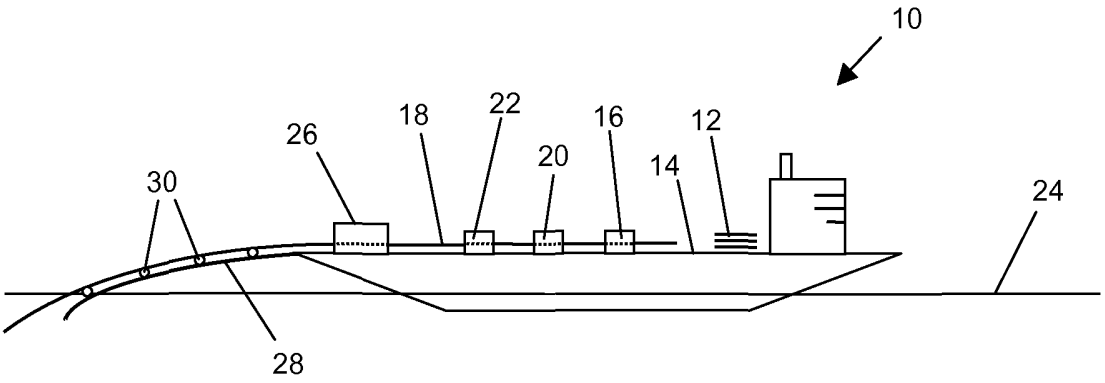


Figure 1

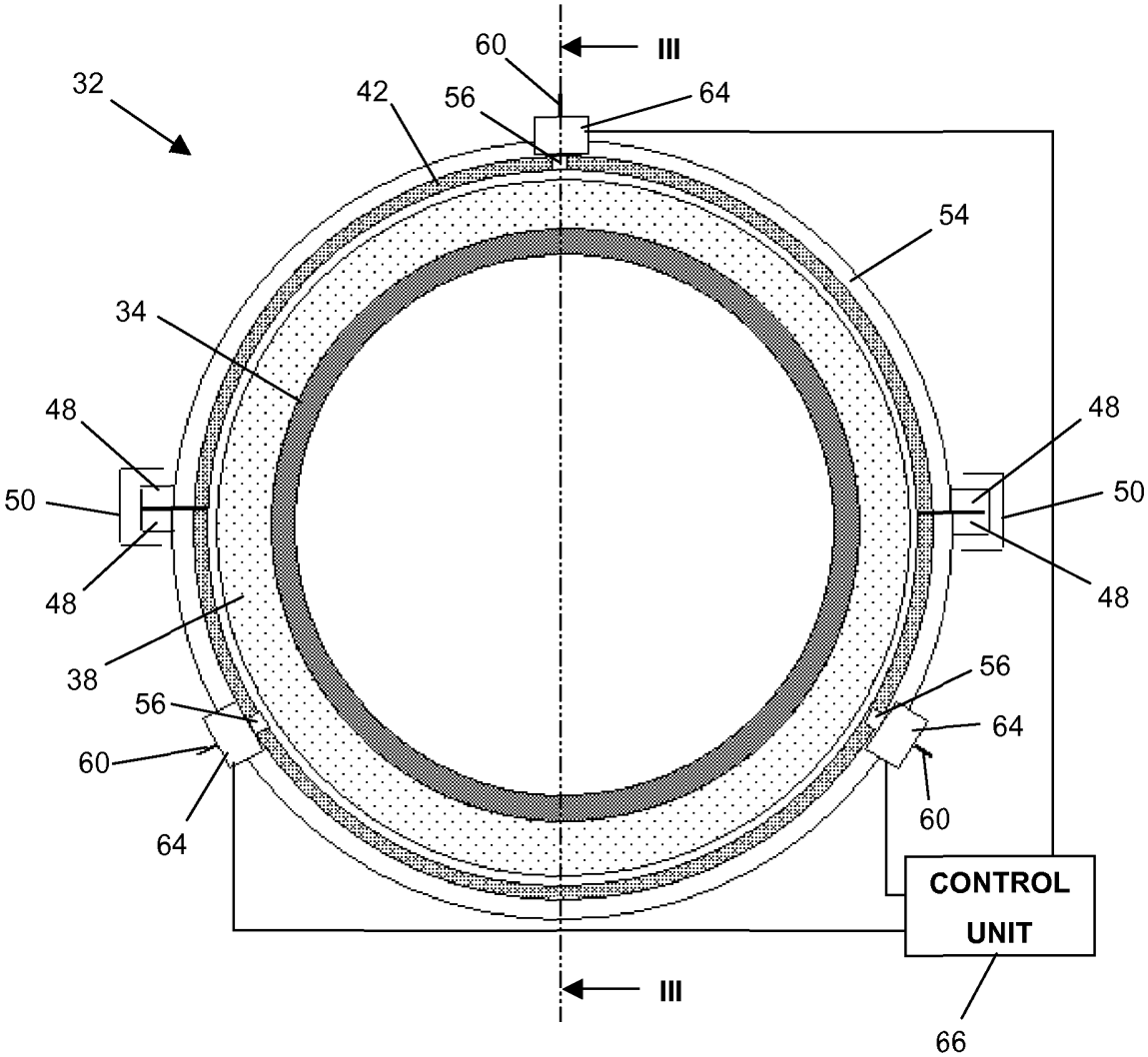


Figure 2

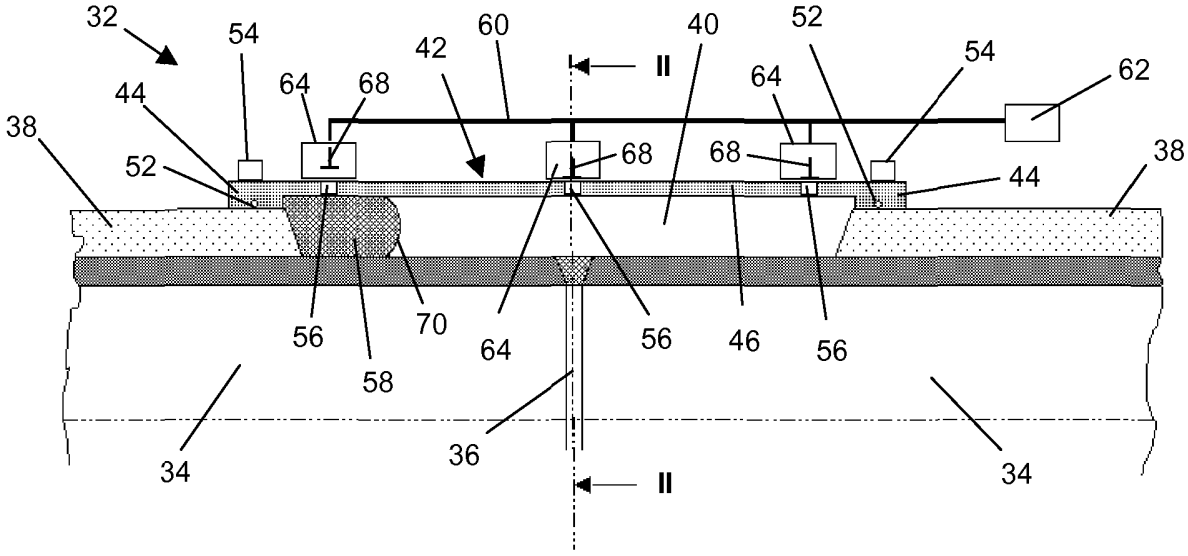


Figure 3a

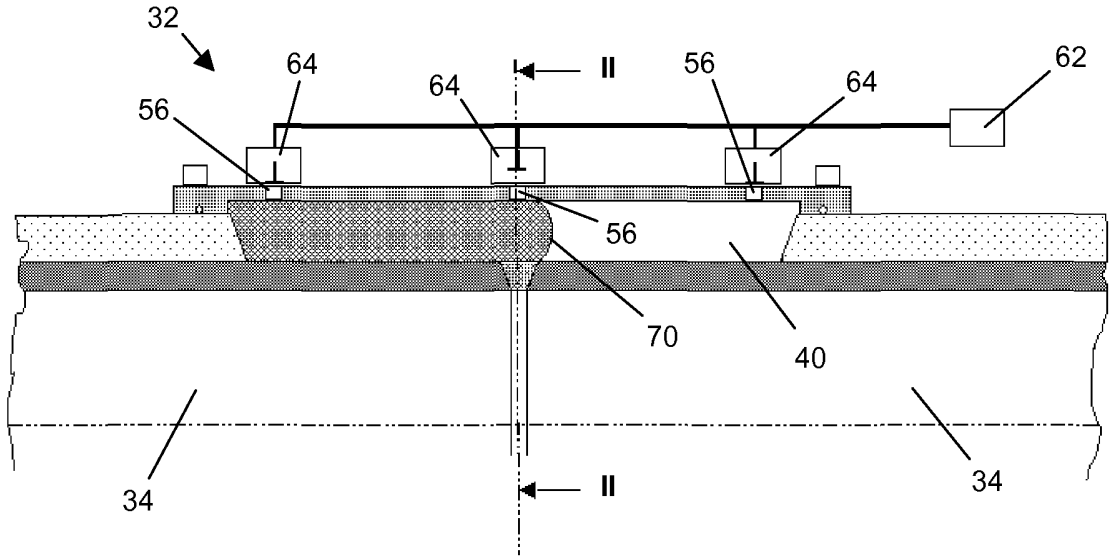


Figure 3b

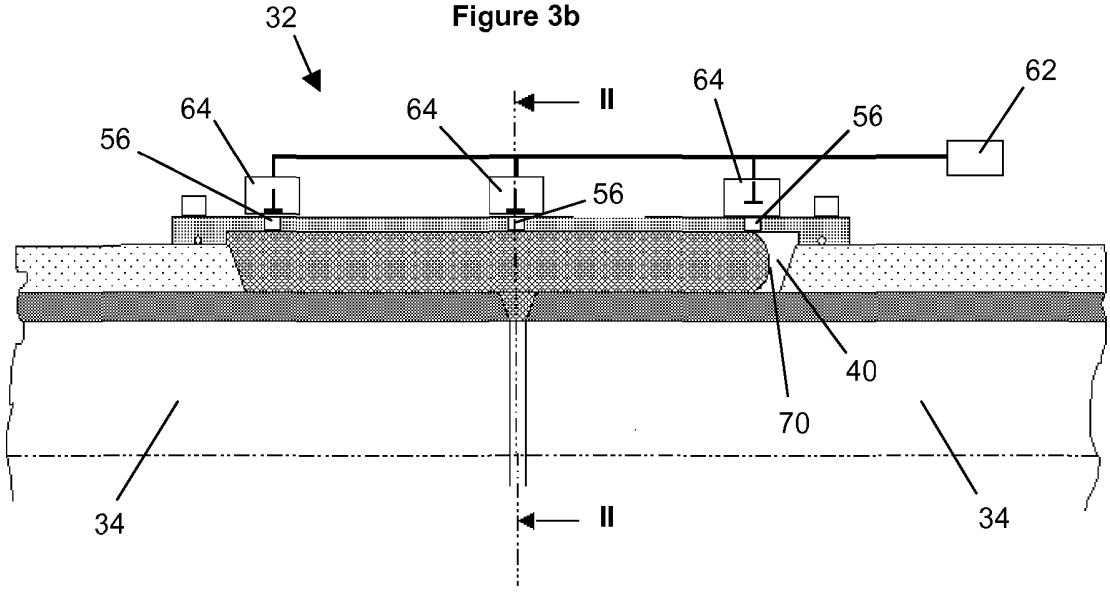


Figure 3c

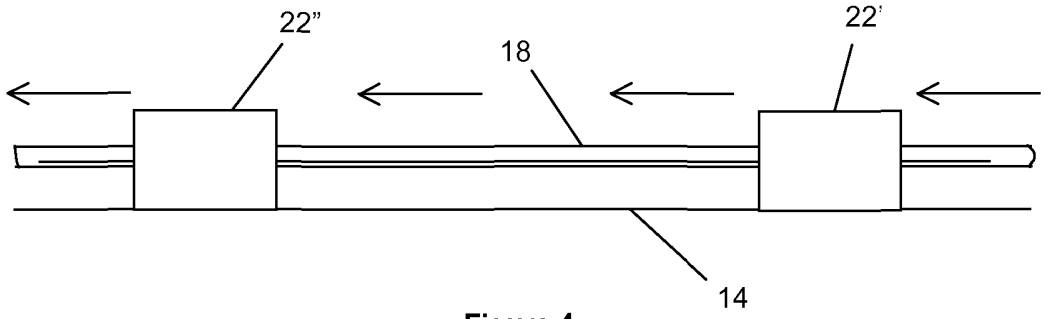


Figure 4

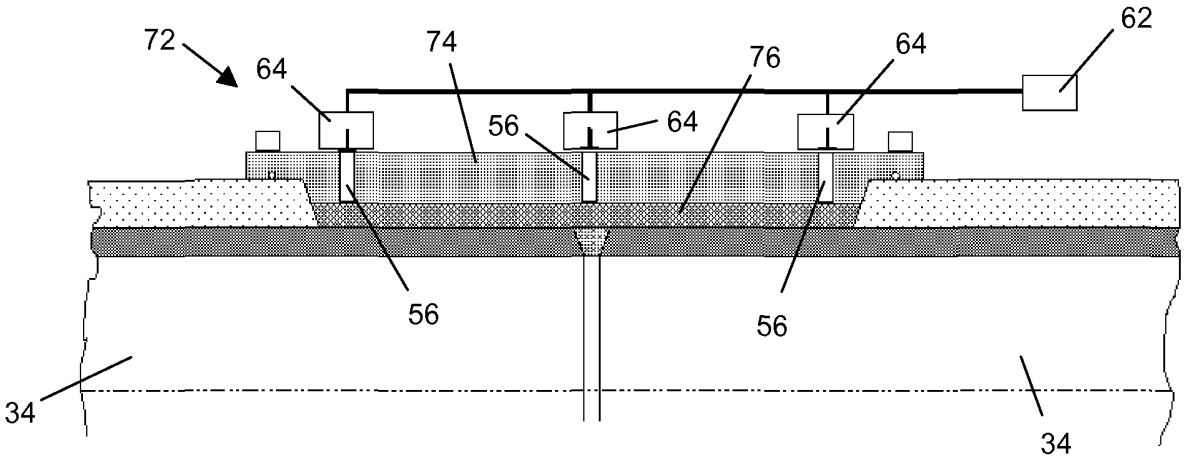


Figure 5a

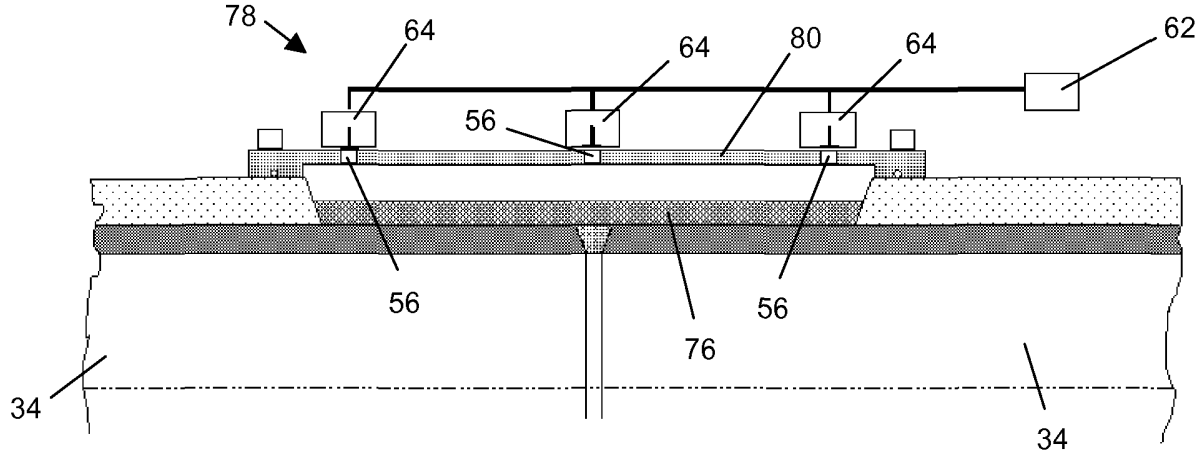


Figure 5b

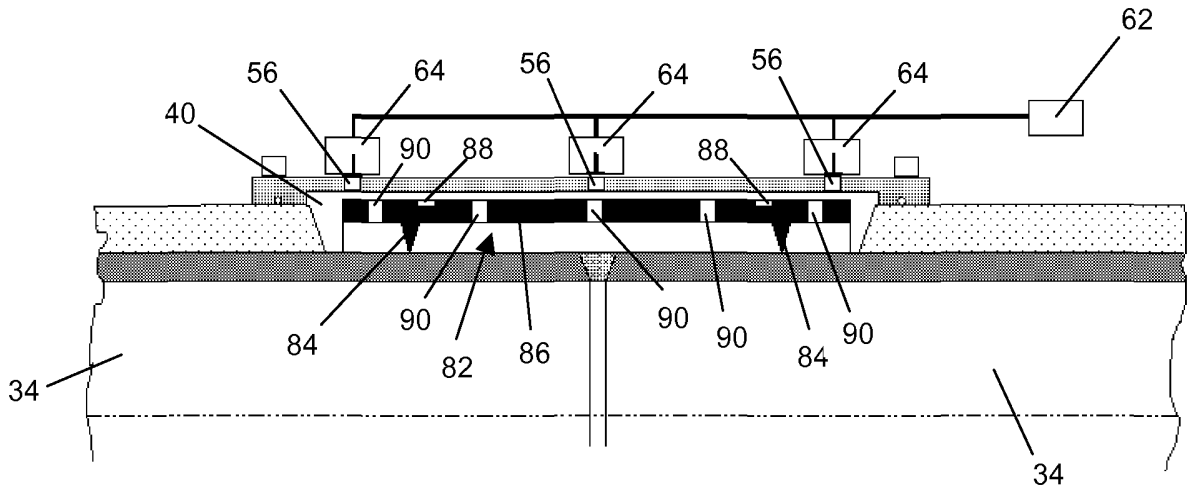


**Figure 6**

# Techniques for coating pipes

This invention relates to coating pipes, in particular to apparatus and techniques for coating pipeline field joints and to pipelines having field joints coated by those techniques.

Pipelines used in the oil and gas industry are usually formed of lengths of steel pipe - 'pipe joints' - welded together end-to-end as the pipeline is laid. To mitigate corrosion of the pipeline and optionally also to insulate the fluids that the pipeline carries in use, the pipe joints are pre-coated with protective coatings that, optionally, are also thermally insulating.

Many variations are possible in the structure and composition of the coating to obtain the required protective or insulative properties. However, polypropylene (PP) is most commonly used to coat the pipe joints from which pipelines are made. For example, a so-called three-layer PP (3LPP) coating may be used for corrosion protection and a so-called five-layer PP (5LPP) coating may be used for additional thermal insulation. Additional layers are, of course, possible.

A 3LPP coating typically comprises an epoxy primer applied to the cleaned outer surface of the steel pipe joint. As the primer cures, a second thin layer of PP is applied so as to bond with the primer and then a third, thicker layer of extruded PP is applied over the second layer for mechanical protection. A 5LPP coating adds two further layers, namely a fourth layer of PP modified for thermal insulation e.g. glass syntactic PP (GSPP) or a foam, surrounded by a fifth layer of extruded PP for mechanical protection of the insulating fourth layer.

A short length of pipe is left uncoated at each end of the pipe joint to facilitate welding. The resulting 'field joint' must be coated with a field joint coating to mitigate corrosion and to maintain whatever level of insulation may be necessary for the purposes of the pipeline.

Where a pipeline is laid offshore, welding and field joint coating is commonly performed aboard a pipelaying vessel such as a laybarge that launches the resulting pipe string using S-lay or J-lay methods.

In the S-lay method, a pipe string is assembled on the deck of the vessel in a horizontal firing line with multiple welding stations. The pipe string is launched from the vessel over a stinger comprising a succession of rollers, from which the pipe string curves down through the water to a touchdown point on the sea bed. Field joint coating is carried out upstream of the stinger, at one or more coating stations to which the pipe string is advanced in stepwise fashion after welding.

Field joint coating is also employed during J-lay installation, in which pipe joints are lifted into a near-vertical orientation in a tower for welding to the end of the pipe string. Field joint coating is carried out downstream of the welding station in the tower, just before the pipe string is launched downwardly from the vessel into the sea.

In principle, the S-lay method allows faster pipelaying than the J-lay method but J-lay is necessary in challenging pipelaying situations where water depth and strong currents make S-lay impractical, without imparting large strains to the pipeline.

Whether using S-lay or J-lay methods, the speed of pipelaying depends upon minimising the timescale of all operations on the critical path. Given the stepwise, sequential processing steps of welding and coating, it is particularly important that neither welding nor coating take longer than is necessary or that one process takes substantially longer than the other. Otherwise there will be a 'bottleneck' in the pipeline installation process.

The faster welding speed possible using the S-lay method means that a shorter period of time is available for field joint coating in S-lay than in J-lay. This short time period available for field joint coating in the S-lay method has previously favoured a cast-moulded polyurethane (CMPU) technique that relies on curing rather than cooling to solidify the coating. This allows a cycle time of circa five minutes, which broadly corresponds to the cycle time of welding operations in the S-lay method and so removes the coating operation from the critical path.

In CMPU techniques, the exposed surface of the pipe at the abutting welded ends of the pipe joints is cleaned and a primer is applied. A mould is then positioned to enclose the field joint and a two-component urethane material is cast into the annular cavity defined within the mould around the field joint. The urethane material then cures, cross-linking and solidifying to form polyurethane (PU). When the PU has cured to a self-supporting extent, the mould is removed to leave the field joint coating in place around

the region of the weld. Curing may continue thereafter as the PU coating approaches its design strength.

The speed of the chemical reaction involved in curing of CMPU is largely independent of heating or the size or thickness of the field joint coating, and there is no need for cooling time to set the coating. Moreover, the mould does not need to withstand high pressures and so can be of compact, lightweight and simple design.

However, an CMPU field joint coating has disadvantages. A key disadvantage arises from the dissimilarity between PP and PU, which undermines the bond strength between the pipe coating and the field joint coating. This introduces a risk that cracks may occur at the interface between the pipe coating and the field joint coating. Any such cracks may allow water to reach the outer surface of the pipe, thus corroding the pipe. Water ingress may also reduce the adhesion of the coating to the pipe and may additionally degrade the coating, particularly due to hydrolysis of the PU under heat emanating from within the pipeline in use; this is particularly significant under the high-pressure conditions of deep water. Degradation or loss of adhesion of the coating will tend to permit further corrosion of the pipe and may also reduce its thermal insulation.

This disadvantage of a CMPU field joint coating may be mitigated by instead using PP as the field joint coating in an injection moulded polypropylene (IMPP) process. In an IMPP process, the exposed ends of the abutting pipe are cleaned, primed and heated, for example using induction heating or gas flames. The exposed chamfers at the ends of the pipe coatings are also heated. The field joint is then enclosed by a mould that defines an annular cavity around the field joint. Molten PP is injected into the cavity under high pressure. Once the PP has cooled to a self-supporting extent, the mould is removed, leaving a tube of PP around the field joint as the field joint coating. This tube is continuous with the tubular coating surrounding the pipe joints, such that the same or compatible coating material extends all along the length of the pipe string.

A field joint coating of IMPP has broadly similar mechanical and thermal properties to a pipe coating of PP. Also, the pipe coating and the field joint coating are sufficiently compatible that they fuse together at their mutual interface, resisting cracking and hence giving longer service life. The service temperature of PP is also markedly higher than PU.

However, using existing techniques, IMPP coating at a single station has a typical cycle time of eight to ten minutes, which cannot compete with the short cycle time of CMPU coating. Consequently, IMPP coating is not suitable for use in S-lay pipeline installation methods especially. Unlike CMPU, the injected molten PP must be allowed time to cool down and this cooling time is strongly dependent on the size and the depth of the mould cavity defining the field joint coating. Whilst the mould can be water-cooled to accelerate cooling, careless forced cooling may reduce the quality of the field joint coating and it still takes too long for the PP to solidify to an extent necessary to resist flattening when the pipe string passes over the rollers of the stinger.

IMPP coating may be used in J-lay methods where there is more time to coat the field joint, where the field joint coating will cool quickly upon immersion in water and where the field joint coating will encounter less local deformation during launching. However, IMPP coating lies on the critical path in S-lay methods and introduces a disadvantageous delay.

IMPP coating also suffers from the viscosity of the molten PP and hence the need to pump and contain the PP at high moulding pressures. This adds to the bulk and cost of the mould and of the injection equipment that feeds molten PP to the mould.

It is against this background that the present invention has been made. The invention aims to reduce the cycle time of an IMPP coating operation, hence allowing the benefits of IMPP to be enjoyed without suffering a substantial increase in cycle time in comparison with an IMPU coating operation. The potentially time-saving coating techniques of the invention may be applied beneficially in J-lay methods but for reasons that will be apparent from the above, they have the greatest benefit when used in S-lay methods.

From a first aspect, the invention resides in a method of coating a field joint of a pipeline, comprising: positioning a mould tool around the field joint to define a mould cavity; and injecting plastics material into the mould cavity through a plurality of gates in the mould tool, spaced along the mould cavity. This speeds the cycle time by allowing plastics material to be injected through different gates at different times as the mould cavity is filled. For example, plastics material may be injected through at least one first gate to advance a melt front within the mould cavity, and subsequently plastics material may be injected through at least one second gate spaced from the first gate.

For homogeneity and strength, it is preferred that the plastics material is injected through the second gate when the melt front passes the second gate. Until the melt front passes the second gate, the second gate is preferably kept closed. For quick cooling, it is further preferred that injection of plastics material through the first gate ceases when plastics material is being injected through the second gate. This allows the plastics material injected through the first gate to cool while plastics material is being injected through the second gate for pursuing the filling of the empty cavity.

Plastics material may be injected through a first gate situated between other gates to advance a melt front from the first gate toward the other gates. It is also possible to advance a melt front progressively from one end of the mould cavity to another end of the mould cavity.

The method of the invention preferably involves generating an annular melt front within the mould cavity around the pipe joints to be coated. That melt front suitably advances longitudinally or axially within the mould cavity with respect to the pipe joints but it may also advance circumferentially within the mould cavity with respect to the pipe joints.

To create an annular melt front, plastics material may be injected through a plurality of gates angularly spaced around the field joint. For example, injection may take place simultaneously through a first group of gates angularly spaced around the field joint near a first end of the cavity. When the melt front progresses longitudinally in the cavity, a second group of gates angularly spaced around the field joint opens, causing the melt front to advance progressively from a first end of the cavity to a second end of the cavity.

To cater for shrinkage during cooling of the plastics material, it is advantageous for the mould cavity to be radially deeper than the radial thickness of a coating on the pipes joined by the field joint. For example, the mould tool may comprise end sections of relatively small internal diameter and a central section of relatively large internal diameter.

Optionally, the invention may involve positioning an insert to lie within the mould cavity and injecting plastics material into the mould cavity to embed the insert in the plastics material. In that case, it is preferred to maintain a gap between a body of the insert and the pipe joints joined by the field joint to allow the plastics material to flow around the insert as the mould cavity fills. This may be achieved with spacer formations on the

insert. It is also preferred that the plastics material flows through a body of the insert as the mould cavity fills. Passages such as holes may be provided in the body of the insert for that purpose. This ensures that the plastics material surrounds the insert in intimate contact and fills the mould.

Where used, an insert may be of a different material to the plastics material injected into the mould cavity. For example, the material of the insert may be relatively insulative in comparison with the plastics material injected into the mould cavity. This difference may be used to tailor the insulative properties of the field joint coating.

The method of the invention may also comprise: positioning a first mould tool around the field joint to define a first mould cavity; injecting plastics material into the first mould cavity to create an inner coating on the field joint; positioning a second mould tool around the field joint to define a second mould cavity around the inner coating; and injecting plastics material into the second mould cavity to create an outer coating on the field joint.

Different plastics materials may be injected into the first and second mould cavities. For example, a relatively insulative plastics material may be injected into the first mould cavity and a relatively strong plastics material may be injected into the second mould cavity. Again, this difference may be used to tailor the insulative properties of the field joint coating.

This first aspect of the invention may also be expressed in terms of apparatus for coating a field joint of a pipeline, the apparatus comprising a mould tool positionable around the field joint to define a mould cavity, the mould tool having a plurality of gates spaced along the mould cavity through which plastics material may be injected into the mould cavity. The mould tool suitably has a tubular wall around which the gates are distributed circumferentially.

Advantageously, filling of the mould cavity is controlled by a control unit acting on valves associated with the gates. Each gate preferably has a respective valve under individual control of the control unit.

An insert may also have benefit without sequential injection moulding through spaced gates in the mould tool. Thus, from a second aspect, the invention resides in a method of coating a field joint of a pipeline, comprising: positioning a mould tool around the

field joint to define a mould cavity; positioning an insert to lie within the mould cavity; and injecting plastics material into the mould cavity to embed the insert in the plastics material.

The insert is suitably positioned on the field joint before the mould tool is positioned around the field joint. Advantageously, the insert is positioned on a field joint at an upstream station and the mould tool is positioned around a field joint at a downstream station with respect to a direction of movement of the pipeline along a firing line. This allows simultaneous processing at both stations and so saves time: a mould tool may be positioned around a field joint at the downstream station at the same time as an insert is positioned on a succeeding field joint at the upstream station.

This second aspect of the invention may also be expressed in terms of apparatus for coating a field joint of a pipeline, comprising a mould tool positionable around the field joint to define a mould cavity, and an insert positionable within the mould cavity to be embedded in plastics material injected into the mould cavity. This aspect of the invention also extends to a pipeline production facility comprising that apparatus, wherein the insert is positioned on a field joint at an upstream station and the mould tool is positioned around a field joint at a downstream station with respect to a direction of movement of a pipeline being produced by the facility.

The injection-moulding application of inner and outer coatings may also be used without sequential injection moulding through spaced gates in the mould tool. Thus, from a third aspect, the invention resides in a method of coating a field joint of a pipeline, comprising: positioning a first mould tool around the field joint to define a first mould cavity; injecting plastics material into the first mould cavity to create an inner coating on the field joint; positioning a second mould tool around the field joint to define a second mould cavity around the inner coating; and injecting plastics material into the second mould cavity to create an outer coating on the field joint.

Again, to save time, simultaneous processing may take place at two stations. Specifically, plastics material may be injected into the first mould cavity at an upstream coating station and plastics material may be injected into the second mould cavity at a downstream coating station with respect to a direction of movement of the pipeline along a firing line. In that case, the first mould tool is advantageously positioned around a field joint at the upstream coating station at the same time as the second mould tool is positioned around a preceding field joint at the downstream coating station.

The third aspect of the invention may also be expressed in terms of apparatus for coating a field joint of a pipeline, comprising first and second mould tools positionable successively around the field joint to define first and second mould cavities respectively, the second mould tool having a greater internal mould cavity diameter than that of the first mould tool to overlay an outer coating on an inner coating produced by the first mould tool. This third aspect of the invention also extends to a pipeline production facility comprising that apparatus, wherein plastics material is injected into the first mould cavity at an upstream coating station and plastics material is injected into the second mould cavity at a downstream coating station with respect to a direction of movement of a pipeline being produced by the facility.

The inventive concept extends to a pipelaying vessel comprising pipeline production facilities of the invention or apparatus of the invention, or operating any of the methods of the invention. The inventive concept further extends to a pipeline or a field joint for a pipeline, produced by the pipelaying vessel of the invention, by pipeline production facilities of the invention or by apparatus of the invention, or by performing any of the methods of the invention.

In order that the invention may be more readily understood, reference will now be made, by way of example, to the accompanying drawings in which:

Figure 1 is a schematic side view of a lay barge configured for S-lay operation, showing a typical context for the coating techniques of the present invention;

Figure 2 is a schematic cross-sectional view on line II-II of Figures 3a to 3c, showing a mould tool in accordance with the invention positioned around a field joint;

Figures 3a to 3c are longitudinal sectional detail views of the mould tool and field joint on line III-III of Figure 2, showing the progression over time of a sequential injection moulding operation in accordance with the invention;

Figure 4 is a schematic side view of upstream and downstream coating stations in the firing line on a vessel as shown in Figure 1;

Figures 5a and 5b are longitudinal sectional detail views of different mould tools around a field joint in a variant of the invention in which successive moulding operations are performed at the upstream and downstream coating stations shown in Figure 4; and

Figure 6 is a longitudinal sectional detail view of a mould tool around a field joint in a further variant of the invention in which an insert is embedded in injection-moulded plastics.

Referring firstly to the schematic view of Figure 1 of the drawings, a pipelaying vessel 10 is configured for the S-lay installation method and moves from left to right as illustrated during a pipelaying operation. The vessel 10 carries a supply of pipe joints 12 on its deck 14 that are welded together at one or more welding stations 16 to form a pipe string 18 that moves aft with respect to the vessel 10 along a firing line. The welds are tested at one or more testing stations 20 located downstream (i.e. aft) of the welding stations 16 and are then coated at one or more coating stations 22 located downstream of the testing stations 20. The welding stations 16, testing stations 20 and coating stations 22 thus lie on the firing line along which the pipe string 18 moves as it is assembled, checked and coated before being launched from the vessel 10 into the sea 24.

The pipe string 18 is supported by a tensioner system 26 located downstream of the coating stations 22. The tensioner system 26 typically comprises three tensioners but such details are not relevant to the invention and so have been omitted from the drawings. The pipe string 18 is launched from the vessel 10 over a stinger 28 extending aft of the vessel 10, located downstream of the tensioner system 26. The stinger 28 comprises rollers 30 that support the overbend of the pipe string 18 as it enters the sea 24. The pipe string 18 hangs from the stinger 28 in a shallow S-shape under tension acting between the tensioner system 26 and a touchdown point on the sea bed (not shown).

The present invention is concerned with coating operations performed at the coating stations 22 on the firing line, which will now be described with reference to Figures 2 to 5 of the drawings.

Figures 2 and 3a to 3c of the drawings show a mould tool 32 in accordance with the invention, encircling a welded field joint of a pipeline at a coating station 22. The field

joint is created between abutting pipe joints 34 where a circumferential weld 36 attaches the pipe joints 34 to each other.

Each pipe joint 34 is coated, for example with a 5LPP coating 38, and that coating 38 terminates short of the end of each pipe joint 34 with a typically chamfered end shape. An annular gap lies between the opposed ends of the coating 38 around the weld 36, where the exposed external surfaces of the pipe joints 34 need to be coated. For this purpose, the mould tool 32 is fixed around the field joint, extending from one coating 38 to the other and overlapping those coatings 38 to define a mould cavity 40 including the annular gap between the coatings 38 into which molten plastics material is injected as a field joint coating.

The mould tool 32 comprises a tube 42 of generally circular cross-section, divided longitudinally on a diameter of the cross-section into two halves. Opposed end portions 44 of the tube 42 seat against the coatings 38 of the respective pipe joints 34 and so have an internal diameter corresponding to the external diameter of the coated pipe joints 34. A central portion 46 of the tube 42 aligned with the gap between the coatings 38 has increased internal diameter that exceeds the external diameter of the coated pipe joints 34. This enlarges the mould cavity 40 to allow for shrinkage of the injected plastics material as it cools.

The two halves of the mould tool 32 are assembled together to encircle the field joint. Where they meet, the two halves have flanges 48 that are clamped together by external clamps 50 represented schematically in Figure 2. The clamps 50 hold together the two halves against internal pressure within the mould tool 32 in use; they also hold the mould tool 32 in sealing engagement with the coatings 38 of the pipe joints 34. Inwardly-facing seals 52 are provided in the end portions 44 of the mould tool for that purpose, as can be seen in Figures 3a to 3c. Stiffening rings 54 encircling the end portions 44 of the mould tool 32 also help to maintain structural integrity and sealing.

The tubular wall of the mould tool 32 is penetrated by an array of gates 56 for injection into the mould cavity 40 of molten plastics 58 supplied through feed lines 60 under pressure from a supplying reservoir or machine 62. A total of nine gates 56 are shown in the example of Figures 2 and 3a to 3c; those gates 56 are disposed in three axially-spaced annular groups, each group comprising three gates 56 equi-angularly spaced around the circumference of the tubular wall.

Each gate 56 has a respective valve 64 that controls the injection of molten plastics 58 through that gate 56. The valves 64 are controlled by a central control unit 66 shown in Figure 2 and may be operated independently of each other. To simplify illustration of the sequential injection moulding principle of the invention, poppet valve elements 68 are shown schematically in the valves 64 of Figures 3a to 3c; other valve types are, of course, possible.

In practice, the mould tool 32 shown schematically in Figures 2 and 3a to 3c will have other features necessary for injection moulding, such as vents to allow air to escape as the mould cavity 40 fills with molten plastics 58. It is also possible for the mould tool 32 to have a cooling system, such as a water jacket created by water pipes disposed in or on the tubular wall of the mould tool 32. Such features have been omitted from these schematic drawings for clarity.

Before the injection moulding operation begins, the bare uncoated external surface of the pipe joints 34 will be cleaned, primed and heated, as will the chamfered end surfaces of the coatings 38.

In Figure 3a, the injection moulding operation has begun by opening the valves 64 associated with the first annular group of gates 56 at one end of the mould cavity 40. The result is an annular melt front 70 that has already filled that end of the mould cavity 40 and is now progressing along the mould cavity 40 toward the other end of the mould cavity 40. The valves 64 associated with the second and third annular groups of gates 56 remain closed at this stage.

In Figure 3b, the melt front 70 has just passed the second annular group of gates 56 mid-way along the mould cavity 40. Now, the valves 64 associated with the first annular group of gates 56 close and the valves 64 associated with the second annular group of gates 56 open. This 'cascade' technique further propels the melt front 70 along the mould cavity 40 while maintaining homogeneity of the melt. In this respect, it is advantageous that the valves 64 associated with the second annular group of gates 56 only open when the melt front 70 has passed them; otherwise, there will be two melt fronts that may weld with dissimilar crystalline structures where they come together, which could introduce a weakness in the finished field joint coating. Meanwhile, as the valves 64 associated with the first annular group of gates 56 have closed, the melt in the region of that first annular group no longer receives heat input and so is allowed to start cooling early while injection of melt continues elsewhere in the mould. Cooling can

be accelerated by a cooling system of the mould 32 at the outer side of the mould cavity 40 and by the pipe at the inner side of the cavity.

In Figure 3c, the injection moulding operation is almost complete. The melt front 70 has just passed the third annular group of gates 56 near the opposite end of the mould cavity 40. Now, the valves 64 associated with the second annular group of gates 56 close and the valves 64 associated with the third annular group of gates 56 open. This fills the remainder of the mould cavity 40 while the melt in the region of the second annular group of gates 56 is able to cool quickly. Meanwhile the melt in the region of the first annular group of gates 56 has already cooled significantly.

When the mould cavity 40 has been filled and the melt has solidified to a self-supporting extent, the clamps 50 can be released to separate and remove the two halves of the mould tool 32 from the field joint. As it sets, the injection-moulded material will shrink but the oversized central portion 46 of the mould tool 32 allows for this shrinkage so that the external diameter of the finished field joint coating approximates to the external diameter of the coated pipe joints 34 to either side of the field joint.

The sequential injection moulding operation described above has several advantages in the context of pipeline field joint coating. It enables quick cooling of thermoplastics materials, reducing cycle time to a level compatible with S-lay installation methods although it is emphasised that the process is also suitable for J-lay installation methods. Yet, the process of the invention produces a high-quality field joint coating. Also, it enables lower moulding pressure and hence lower clamping force as the viscous melt need only travel the short distance between the gates 56 rather than traversing the mould cavity 40 as a whole.

Other arrangements of gates 56 and valves 64 are possible, both in the number of gates 56 and their relative disposition around the tubular wall of the mould tool 32: for example, the gates 56 of neighbouring annular groups may be angularly offset with respect to each other. Variations are also possible in the sequence of operation of the valves 64: for example, the valves 64 of an annular group need not open simultaneously but their opening could be staggered, for example by delaying opening of the valve 64 associated with one gate 56 until the melt front 70 from another, previously opened gate 56 has passed it.

The valves 64 may open and close on a predefined timescale based on the assumption that the melt front 70 will move a certain distance over a certain time. It is also possible to open and close the valves 64 in response to detecting the position of the melt front 70, for example using temperature sensors or pressure sensors (not shown) on the mould tool 32.

Figures 4, 5a, 5b and 6 show other variants of the invention. They are shown in conjunction with gates 56 and valves 64 arranged for sequential injection moulding as in Figures 2 and 3a to 3c but they may be used independently of sequential injection moulding if needs be.

The variant shown in Figures 4, 5a and 5b is specific to S-lay and contemplates successive coating stations 22', 22" in the firing line working simultaneously on successive pipe joints 34, as shown in Figure 4. An upstream coating station 22' applies a thin inner injection-moulded coating that cools and hardens quickly, particularly as it has a low volume in relation to its surface area. A downstream coating station 22" applies a further thin outer injection-moulded coating atop the inner coating, which similarly cools and hardens quickly. Together, the thicknesses of the inner and outer coatings, after shrinkage, substantially equate to the thickness of the pipe joint coatings.

For this purpose, different mould tools are used at the different coating stations 22', 22". The upstream coating station 22' has a first mould tool 72 shown in Figure 5a having a thick wall 74 in its central portion and a correspondingly small internal diameter that is less than the external diameter of the coated pipe joints 34. This has produced a thin inner coating 76 by a first sequential injection-moulding operation as shown. In contrast, the second mould tool 78 shown in Figure 5b used at the downstream coating station 22" is much the same as the mould tool 32 shown in Figures 2 and 3a to 3c, with a thinner wall 80 in its central portion and a correspondingly large internal diameter that is greater than the external diameter of the coated pipe joints 34. Here, the second mould tool 78 is shown before starting a second sequential injection-moulding operation to overlay a further thin outer coating over the inner coating 76 already formed at the upstream coating station 22'.

The inner and outer coatings may be of the same material, such as PP, or may be dissimilar materials to optimise properties such as insulation. For example, the inner

coating may be GSPP for insulation and the outer coating may be solid PP for protection and increased heat capacity.

Referring finally to Figure 6 of the drawings, this shows a variant of the invention in which an insert 82 is positioned in the mould cavity 40 to be embedded in molten plastics during a sequential injection-moulding operation. The insert 82 is a thermoplastics tube (of, for example, solid PP or GSPP) in two or more sections that are brought together around the prepared and heated field joint; the insert 82 may itself be heated and primed to promote adhesion of the melt to the insert 82.

Like the arrangement shown in Figure 4, the insert 82 may be attached to the field joint at an upstream station before a mould is positioned around the field joint and the insert at a downstream station.

The insert 82 comprises tapered spacer formations 84 that space the tubular body 86 of the insert 82 from the bare exterior of the pipe joints 34, and annular recesses 88 around the tubular body 86 whereby the sections of the insert 82 may be strapped around the field joint. The tubular body 86 of the insert is also penetrated by holes 90 through which molten plastics may flow during moulding, aiding filling of the mould cavity 40 and ensuring a strong mechanical connection between the hardened melt and the insert 82.

The insert 82 reduces the volume of the melt and increases the ratio of the surface area of the melt relative to its volume, to the benefit of cooling time. The insert 82 serves as a heat sink that promotes cooling of the melt; the insert also reinforces the field joint coating to help it survive the forces of tensioning and launching over the stinger 28. Also, if made of an insulating material like GSPP, the insert 82 may confer desired insulating properties on the field joint coating.

The thermoplastics material used for injection moulding may be PP, polystyrene or other suitable thermoplastics material that is compatible with the coating applied to the pipe joints. Additives or modifiers may be employed, such as an elastomeric modifier like EDPM (ethylene propylene diene monomer rubber) to provide appropriate flexibility and impact resistance, or fibres of glass, aramid or carbon to increase strength and elastic modulus. Additives such as fibres may also reduce shrinkage and speed cooling.

By virtue of the invention, it is envisaged that the cooling time after injection may be reduced to three or four minutes. This enables the use of advantageous injection moulding for field joint coating of compatible thermoplastics in time-critical applications such as S-lay or J-lay pipeline installation methods, without the disadvantages of incompatibility suffered by coating materials such as PU.

## Claims

1. A method of coating a field joint of a pipeline, comprising:

positioning a mould tool around the field joint to define a mould cavity; and

injecting plastics material into the mould cavity through a plurality of gates in the mould tool, spaced along the mould cavity.

2. The method of Claim 1, comprising injecting plastics material through different gates at different times as the mould cavity is filled.

3. The method of Claim 2, comprising injecting plastics material through at least one first gate to advance a melt front within the mould cavity, and subsequently injecting plastics material through at least one second gate spaced from the first gate.

4. The method of Claim 3, comprising injecting plastics material through the second gate when the melt front passes the second gate.

5. The method of Claim 3 or Claim 4, comprising ceasing injection of plastics material through the first gate when plastics material is being injected through the second gate.

6. The method of Claim 5, comprising cooling the plastics material injected through the first gate while plastics material is being injected through the second gate.

7. The method of any of Claims 3 to 6, comprising keeping the second gate closed until the melt front passes the second gate.

8. The method of any of Claims 3 to 7, comprising injecting plastics material through a first gate situated between other gates to advance a melt front from the first gate toward the other gates.

9. The method of any preceding Claim, comprising advancing a melt front progressively from one end of the mould cavity to another end of the mould cavity.

10. The method of any preceding claim, comprising generating an annular melt front within the mould cavity.

11. The method of Claim 10, wherein the melt front advances axially within the mould cavity with respect to the pipe joint.

12. The method of Claim 10 or Claim 11, wherein the melt front advances circumferentially within the mould cavity with respect to the pipe joint.

13. The method of any preceding claim, comprising injecting plastics material through a plurality of gates angularly spaced around the field joint.

14. The method of Claim 13, comprising injecting plastics material simultaneously through a group of gates angularly spaced around the field joint.

15. The method of any preceding claim, wherein the mould cavity is radially deeper than the radial thickness of a coating on the pipes joined by the field joint.

16. The method of any preceding claim, wherein the plastics material is a thermoplastic such as polypropylene, glass syntactic polypropylene or polystyrene, optionally containing additives, modifiers or reinforcements such as fibres of glass, aramid or carbon, or an elastomer.

17. The method of any preceding claim, comprising:

positioning an insert to lie within the mould cavity; and

injecting plastics material into the mould cavity to embed the insert in the plastics material.

18. The method of Claim 17, comprising maintaining a gap between a body of the insert and the pipes joined by the field joint to allow the plastics material to flow around the insert as the mould cavity fills.

19. The method of Claim 17 or Claim 18, wherein the plastics material flows through a body of the insert as the mould cavity fills.

20. The method of any of Claims 17 to 19, wherein the insert is of a different material to the plastics material injected into the mould cavity.

21. The method of Claim 20, wherein the material of the insert is relatively insulative in comparison with the plastics material injected into the mould cavity.

22. The method of any preceding claim, comprising:

positioning a first mould tool around the field joint to define a first mould cavity;

injecting plastics material into the first mould cavity to create an inner coating on the field joint;

positioning a second mould tool around the field joint to define a second mould cavity around the inner coating; and

injecting plastics material into the second mould cavity to create an outer coating on the field joint.

23. The method of Claim 22, wherein different plastics materials are injected into the first and second mould cavities.

24. The method of Claim 23, wherein a relatively insulative plastics material is injected into the first mould cavity and a relatively strong plastics material is injected into the second mould cavity.

25. The method of Claim 23 or Claim 24, wherein the plastics material injected into the second mould cavity has a higher heat capacity than the plastics material injected into the first mould cavity.

26. A method of coating a field joint of a pipeline, comprising:

positioning a mould tool around the field joint to define a mould cavity;

positioning an insert to lie within the mould cavity; and

injecting plastics material into the mould cavity to embed the insert in the plastics material.

27. The method of Claim 26, wherein the insert is positioned on the field joint before the mould tool is positioned around the field joint.

28. The method of Claim 27, wherein the insert is positioned on a field joint at an upstream station and the mould tool is positioned around a field joint at a downstream station with respect to a direction of movement of the pipeline.

29. The method of Claim 28, wherein a mould tool is positioned around a field joint at the downstream station at the same time as an insert is positioned on a succeeding field joint at the upstream station.

30. The method of any of Claims 26 to 29, comprising maintaining a gap between a body of the insert and the pipes joined by the field joint to allow the plastics material to flow around the insert as the mould cavity fills.

31. The method of any of Claims 26 to 30, wherein the plastics material flows through a body of the insert as the mould cavity fills.

32. The method of any of Claims 26 to 31, wherein the insert is of a different material to the plastics material injected into the mould cavity.

33. The method of Claim 32, wherein the material of the insert is relatively insulative in comparison with the plastics material injected into the mould cavity.

34. A method of coating a field joint of a pipeline, comprising:

positioning a first mould tool around the field joint to define a first mould cavity;

injecting plastics material into the first mould cavity to create an inner coating on the field joint;

positioning a second mould tool around the field joint to define a second mould cavity around the inner coating; and

injecting plastics material into the second mould cavity to create an outer coating on the field joint.

35. The method of Claim 34, wherein different plastics materials are injected into the first and second mould cavities.

36. The method of Claim 35, wherein a relatively insulative plastics material is injected into the first mould cavity and a relatively strong plastics material is injected into the second mould cavity.

37. The method of any of Claims 34 to 36, wherein plastics material is injected into the first mould cavity at an upstream coating station and plastics material is injected into the second mould cavity at a downstream coating station with respect to a direction of movement of the pipeline.

38. The method of Claim 37, wherein the first mould tool is positioned around a field joint at the upstream coating station at the same time as the second mould tool is positioned around a preceding field joint at the downstream coating station.

39. Apparatus for coating a field joint of a pipeline, comprising a mould tool positionable around the field joint to define a mould cavity, the mould tool having a plurality of gates spaced along the mould cavity through which plastics material may be injected into the mould cavity.

40. The apparatus of Claim 39, wherein filling of the mould cavity is controlled by a control unit acting on valves associated with the gates.

41. The apparatus of Claim 40, wherein each gate has a respective valve under individual control of the control unit.

42. The apparatus of any of Claims 39 to 41, wherein the mould tool has a tubular wall around which the gates are distributed circumferentially.

43. The apparatus of any of Claims 39 to 42, wherein the mould tool comprises end sections of relatively small internal diameter and a central section of relatively large internal diameter.

44. The apparatus of any of Claims 39 to 43, further comprising an insert positionable within the mould cavity to be embedded in plastics material injected into the mould cavity.

45. The apparatus of Claim 44, wherein the insert comprises at least one spacer formation arranged to maintain a gap between a body of the insert and the pipes joined by the field joint.

46. The apparatus of Claim 44 or Claim 45, wherein the insert comprises at least one passage extending through a body of the insert.

47. The apparatus of any of Claims 39 to 46 and comprising first and second mould tools positionable successively around the field joint to define first and second mould cavities respectively, the second mould tool having a greater internal mould cavity diameter than that of the first mould tool to overlay an outer coating on an inner coating produced by the first mould tool.

48. Apparatus for coating a field joint of a pipeline, comprising a mould tool positionable around the field joint to define a mould cavity, and an insert positionable within the mould cavity to be embedded in plastics material injected into the mould cavity.

49. Apparatus for coating a field joint of a pipeline, comprising first and second mould tools positionable successively around the field joint to define first and second mould cavities respectively, the second mould tool having a greater internal mould cavity diameter than that of the first mould tool to overlay an outer coating on an inner coating produced by the first mould tool.

50. A pipeline production facility comprising the apparatus of Claim 48, wherein the insert is positioned on a field joint at an upstream station and the mould tool is positioned around a field joint at a downstream station with respect to a direction of movement of a pipeline being produced by the facility.

51. A pipeline production facility comprising the apparatus of Claim 49, wherein plastics material is injected into the first mould cavity at an upstream coating station and plastics material is injected into the second mould cavity at a downstream coating station with respect to a direction of movement of a pipeline being produced by the facility.

52. A pipelaying vessel comprising pipeline production facilities as defined in Claim 50 or Claim 51 or apparatus as defined in any of Claims 39 to 49, or operating the method as defined in any of Claims 1 to 38.

53. A pipeline or a field joint for a pipeline, produced by the pipelaying vessel of Claim 52, by pipeline production facilities as defined in Claim 50 or Claim 51 or by apparatus as defined in any of Claims 39 to 49, or by performing the method as defined in any of Claims 1 to 38.

| | | | |
|---|---|---|---|
| **Application No:** | GB1011283.7 | **Examiner:** | Mr Sean Gilday |
| **Claims searched:** | 1-25, 39-47, 52, 53 | **Date of search:** | 5 November 2010 |

## Patents Act 1977: Search Report under Section 17

**Documents considered to be relevant:**

| Category | Relevant to claims | Identity of document and passage or figure of particular relevance |
|---|---|---|
| X | 1-5, 7-10, 12-16, 39-42 | DE102007018519 A1 (DENSO) See translated abstract and figures 6 and 7 |
| X | 1, 39 | WO2006/060209 A1 (RICE) See figures 5 and 6, paragraph [0047] |
| X | 1, 39 | US5127116 A (GRIEG) See figure 1, and column 2 lines 50-54 |

Categories:

| | | | |
|---|---|---|---|
| X | Document indicating lack of novelty or inventive step | A | Document indicating technological background and/or state of the art. |
| Y | Document indicating lack of inventive step if combined with one or more other documents of same category. | P | Document published on or after the declared priority date but before the filing date of this invention. |
| & | Member of the same patent family | E | Patent document published on or after, but with priority date earlier than, the filing date of this application. |

**Field of Search:**

Search of GB, EP, WO & US patent documents classified in the following areas of the UKC$^{X}$ :

Worldwide search of patent documents classified in the following areas of the IPC

B28B; F16L

The following online and other databases have been used in the preparation of this search report

WPI, EPODOC

**International Classification:**

| Subclass | Subgroup | Valid From |
|---|---|---|
| F16L | 0058/10 | 01/01/2006 |
| B28B | 0021/74 | 01/01/2006 |

**Application No:** GB1011283.7 **Examiner:** Mr Sean Gilday

**Claims searched:** 34-38, 49, 51-53 **Date of search:** 4 August 2011

# Patents Act 1977
# Further Search Report under Section 17

**Documents considered to be relevant:**

| Category | Relevant to claims | Identity of document and passage or figure of particular relevance |
|---|---|---|
| X | 34-36, 49 | US5489405 A<br>(FOAM) See claim 1 |

Categories:

| | | | |
|---|---|---|---|
| X | Document indicating lack of novelty or inventive step | A | Document indicating technological background and/or state of the art. |
| Y | Document indicating lack of inventive step if combined with one or more other documents of same category. | P | Document published on or after the declared priority date but before the filing date of this invention. |
| & | Member of the same patent family | E | Patent document published on or after, but with priority date earlier than, the filing date of this application. |

**Field of Search:**

Search of GB, EP, WO & US patent documents classified in the following areas of the UKC$^{X}$ :

Worldwide search of patent documents classified in the following areas of the IPC

B28B; F16L

The following online and other databases have been used in the preparation of this search report

WPI, EPODOC

**International Classification:**

| Subclass | Subgroup | Valid From |
|---|---|---|
| F16L | 0058/10 | 01/01/2006 |
| B28B | 0021/74 | 01/01/2006 |

**Application No:** GB1011283.7 **Examiner:** Mr Sean Gilday

**Claims searched:** 26-33, 48, 50, 52, 53 **Date of search:** 4 August 2011

# Patents Act 1977
# Further Search Report under Section 17

**Documents considered to be relevant:**

| Category | Relevant to claims | Identity of document and passage or figure of particular relevance |
|---|---|---|
| X | 26, 27, 30, 32, 33, 48 | EP0654632 A2 (BALMORAL) See figures 2 and 3 |
| X | 26, 27, 30, 32, 33, 48 | US5489405 A (FOAM) See figure 5 |

Categories:

| | | | |
|---|---|---|---|
| X | Document indicating lack of novelty or inventive step | A | Document indicating technological background and/or state of the art. |
| Y | Document indicating lack of inventive step if combined with one or more other documents of same category. | P | Document published on or after the declared priority date but before the filing date of this invention. |
| & | Member of the same patent family | E | Patent document published on or after, but with priority date earlier than, the filing date of this application. |

**Field of Search:**

Search of GB, EP, WO & US patent documents classified in the following areas of the UKC$^{X}$ :

Worldwide search of patent documents classified in the following areas of the IPC

B28B; F16L

The following online and other databases have been used in the preparation of this search report

WPI, EPODOC

**International Classification:**

| Subclass | Subgroup | Valid From |
|---|---|---|
| F16L | 0058/10 | 01/01/2006 |
| B28B | 0021/74 | 01/01/2006 |