3 Sheets—Sheet 1.

J. H. ROWE.

PLAITING-MACHINES.

No. 193,780. Patented July 31, 1877.

Fig. 1

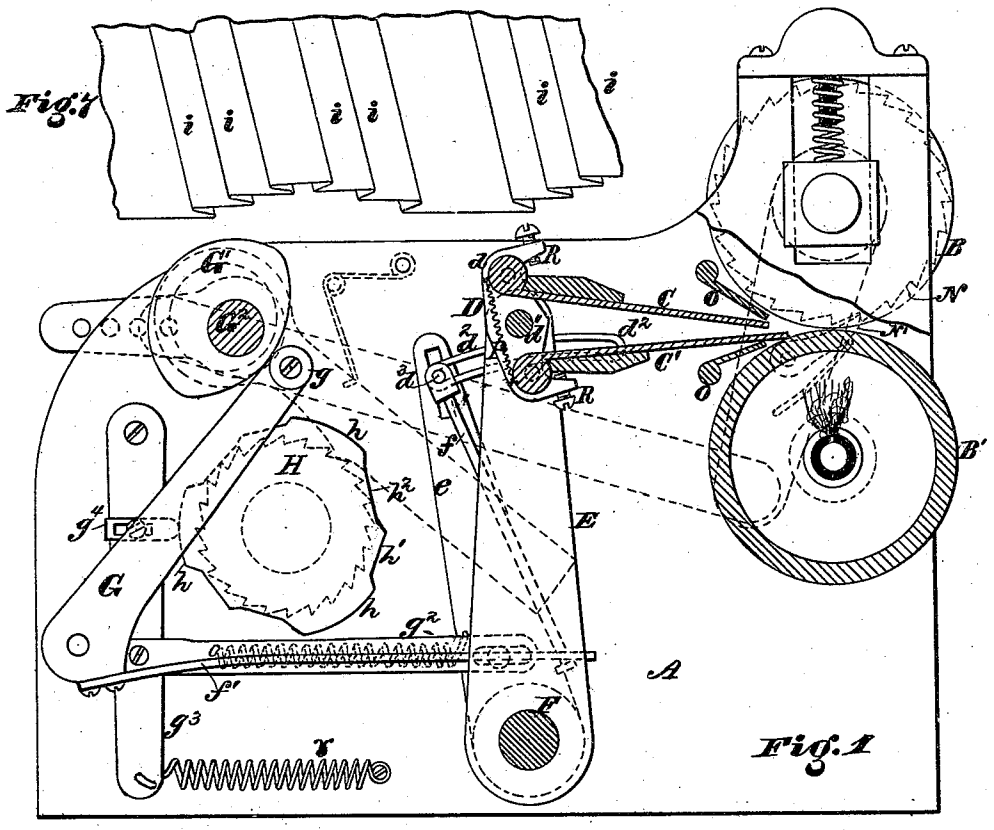

Fig. 2

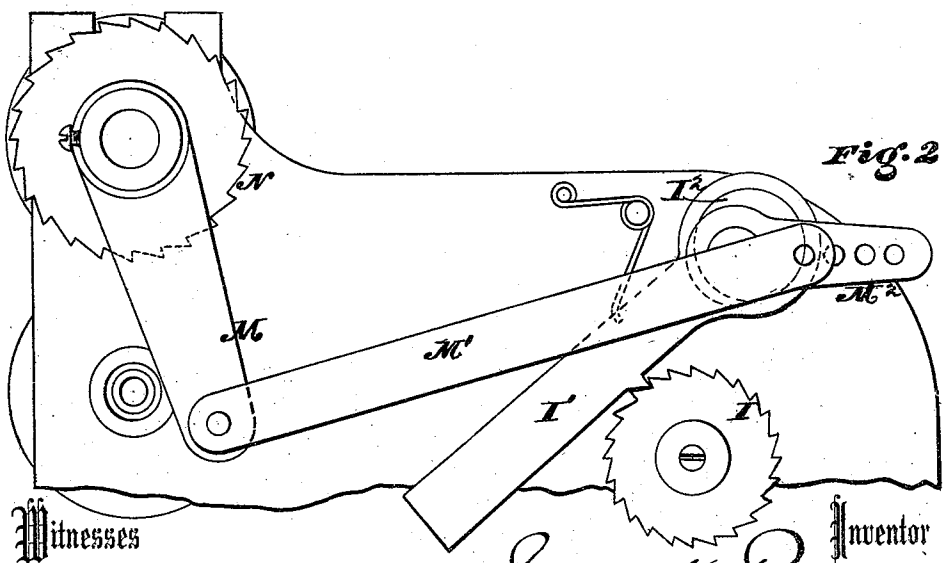

Witnesses

Saml. J. Van Stavoren

Jos. B. Connolly

Inventor

James H. Rowe

By Connolly Bros

Attorneys

N. PETERS, PHOTO-LITHOGRAPHER, WASHINGTON, D. C.

3 Sheets—Sheet 2.

J. H. ROWE.

PLAITING-MACHINES.

No. 193,780. Patented July 31, 1877.

Fig. 3

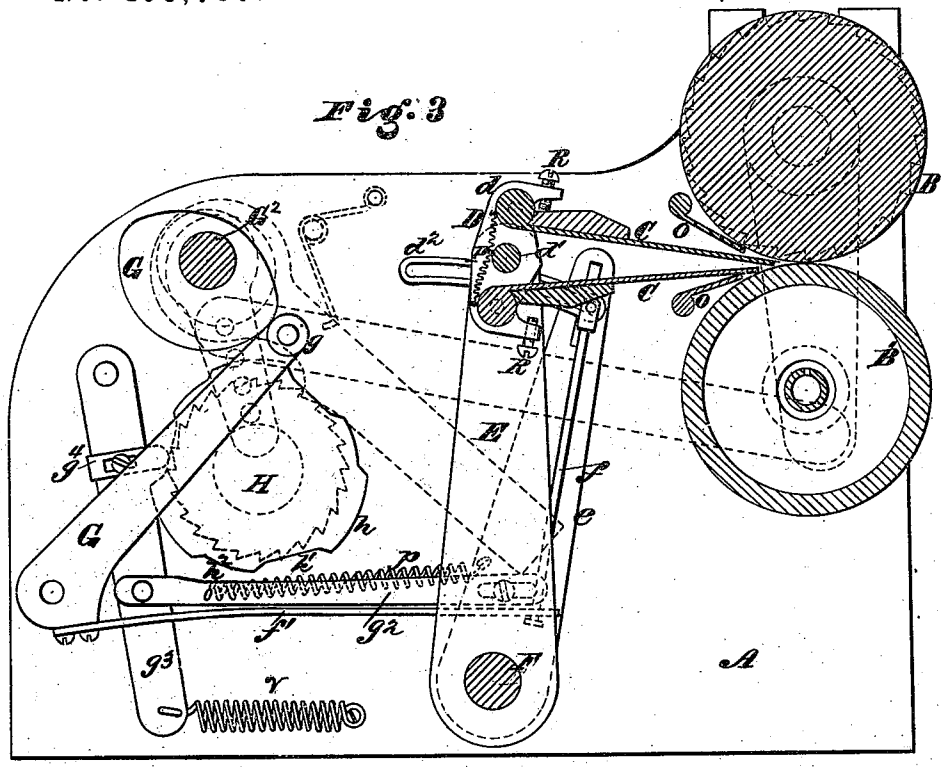

Fig. 4

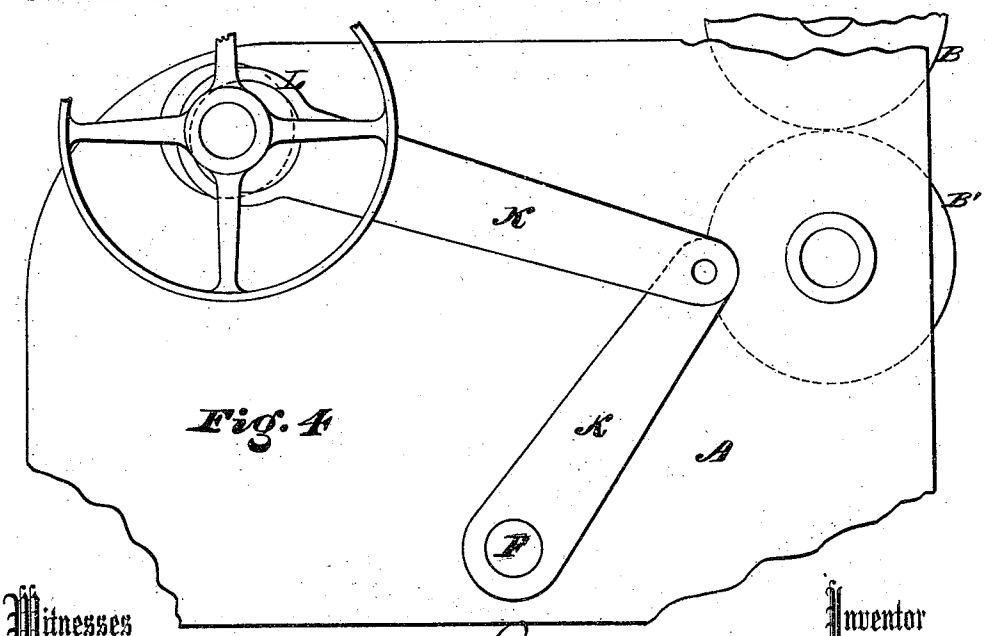

Witnesses

Saml. J. VanStavoren

Jos. B. Connolly

Inventor

James H. Rowe

By Connolly Bros

Attorneys

N. PETERS, PHOTO-LITHOGRAPHER, WASHINGTON, D. C.

3 Sheets—Sheet 3.

J. H. ROWE.

PLAITING-MACHINES.

No. 193,780. Patented July 31, 1877.

Fig. 5

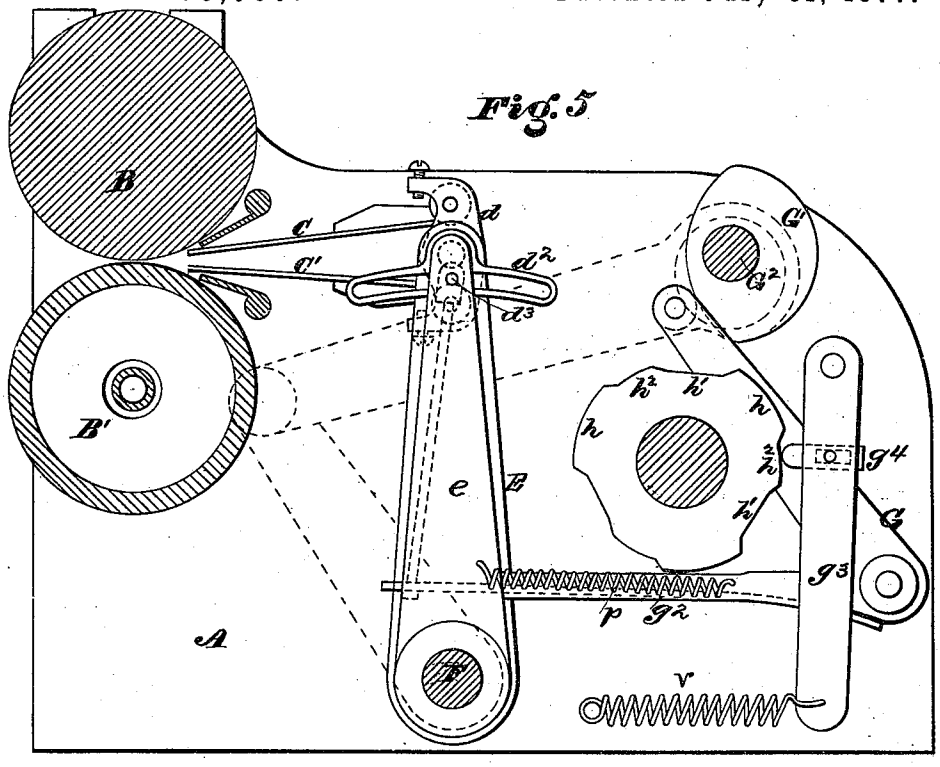

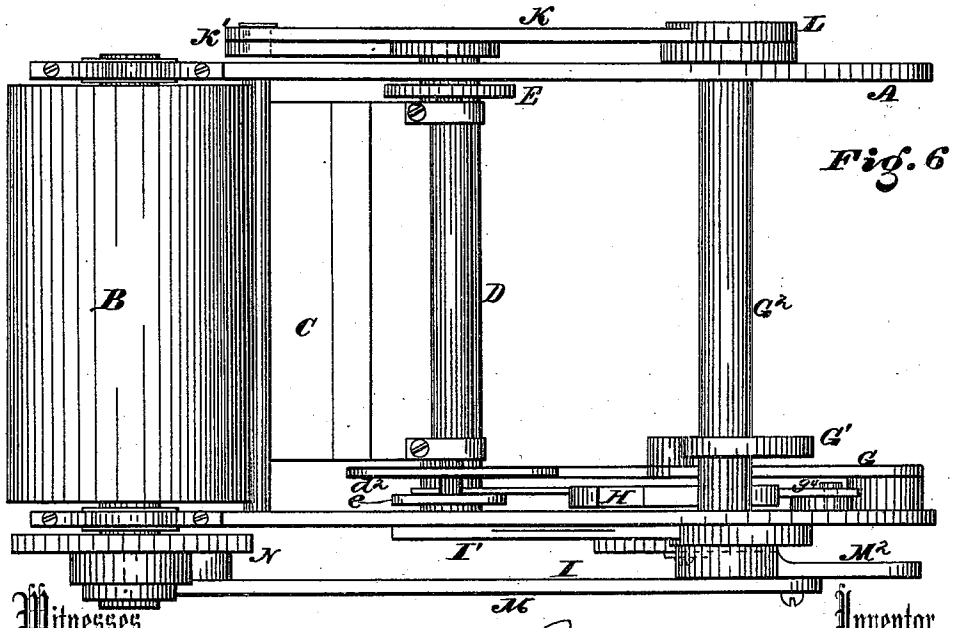

Fig. 6

Witnesses

Saml. J. Van Stavoren

Jas. B. Connolly

Inventor

James H. Rowe

By Connolly Bro.

Attorneys

N. PETERS, PHOTO-LITHOGRAPHER, WASHINGTON, D. C.

UNITED STATES PATENT OFFICE.

JAMES H. ROWE, OF NEW YORK, N. Y., ASSIGNOR TO CHARLES S. BRADFORD, OF WESTCHESTER, PA.

IMPROVEMENT IN PLAITING-MACHINES.

Specification forming part of Letters Patent No. 193,780, dated July 31, 1877; application filed May 3, 1877.

To all whom it may concern:

Be it known that I, JAMES H. ROWE, of New York, in the county of New York and State of New York, have invented certain new and useful Improvements in Plaiting-Machines; and I do hereby declare the following to be a full, clear, and exact description of the invention, such as will enable others skilled in the art to which it pertains to make and use it, reference being had to the accompanying drawings, which form part of this specification.

Figures 1, 3, and 5 are longitudinal vertical sections; Figs. 2 and 4, broken side elevations; Fig. 6, plan, and Fig. 7 detail view.

This invention has relation to machines for plaiting certain classes of woven goods, such as dress material, and the like; and it consists in the novel construction, arrangement, and combination of devices, whereby the material to be plaited, while being fed to a pair of press-rolls, may be folded into the several different kinds, or one uniform series of plaits, with great facility and neatness.

The material to be plaited is passed to the press-rolls between a pair of plaiting-knives, which are hinged to a suitable frame, and held apart at their rear edges. Their forward edges project sufficiently between the rolls to guide the cloth thereto.

By means of peculiar mechanism contrived for the purpose certain movements are imparted to these knives, causing them to fold the cloth, according to requirements, into "knife" plaits and "box" plaits, the order of which depends upon the peculiar form of a rotary cam, through which the plaiting motion is given to the knives, and the outline of which is susceptible of variation, so as to produce the different kinds and orders of plaits generally known and used.

In the accompanying drawings illustrating my invention, A designates a box-like frame, composed of a base and upright sides. In the upper part of one end of said frame are arranged the press-rolls B B′, of which the upper roll is held in spring-bearings, which allow it to yield according to the various thicknesses of cloth, and at the same time to exert sufficient pressure for the requirements of the work. C C′ are the plaiting-knives, pivoted or hinged at their rear edges to a transverse tilting-frame, D; thence projecting forward, and converging between the press-rolls. The frame D consists of the rockers *d d* and horizontal shaft d^1. The shaft d^1 is journaled to the upper part of a swinging frame, E, through which a reciprocating or feeding movement is imparted to the knives. Upon one end of the shaft d^1 is fixed an eccentrically-arranged segmentally-slotted plate or bar, d^2. Through the slot passes a stud or shaft, d^3, connected to an arm, *e*, turning upon the end of a horizontal shaft, F, which is part of the swinging frame E. The stud d^3 is also attached to the forked end of a bar, *f*, and the lower end of the latter is connected to a horizontal bar, f', having its rear end fastened to the short arm or base of a lever, G, which is pivoted to one side of the main frame.

The upper end of the lever G holds an anti-friction roller, *g*, which is adapted for contact with a cam, G^1, secured upon a horizontal shaft, G^2, through which is conveyed the motion and power by which the various elements of the machine are actuated.

A movement of the stud d^3 through the slot is partly conveyed or produced through the arm *e*, which for this purpose is coupled by a link-bar, g^2, to the lower end of a lever, g^3, holding a slotted adjustable stud, g^4, in contact with the periphery of a cam or former, H. The outline of this cam is such as to cause it to automatically adjust and move the plaiting-knives so that they shall produce the various sizes, kinds, and orders of plaits, depending in character upon the peculiarities of the cam's outline.

The cam H receives an intermittent rotary motion from the shaft G^2 through the ratchet-wheel I, with which engages a spring-dog, I^1, attached by an eccentric, I^2, or crank to the end of the shaft G^2.

The shaft G^2 is connected to the shaft F of the swinging frame E by means of the double crank mechanism K K^1.

The arm K is connected to the shaft G^2 by an eccentric, L, or crank similar to the device I^2.

The motion imparted to said swinging frame

is a vibratory or reciprocating one, as is best adapted for the folding and feeding functions of the plaiting-knives.

A double-crank mechanism, M M^1 M^2, is employed to connect the shaft G^2 to the upper roller, upon the shaft of which the arm M^1 is loosely hung, an intermittent rotary motion being imparted to the roller through the ratchet-wheel N and pawl N^1.

O O are inclined plates, keeping the knives in proper relation at their forward edges, and P represents a spring, which causes the plates to work together and with uniformity of motion.

R R are adjustable studs, for the projecting arms of the rockers, to limit the movement of the knives.

The operation of the machine as described is as follows: The material to be plaited is passed toward the rollers between the knives, the latter being in normal relation—that is, their front edges on a line, as shown in Fig. 5. The cam H, as shown, is adapted to produce in order several underlapping, one box, and several overlapping, plaits.

The first positive motion of the machine effects a swinging back of the frame E, a withdrawal of the knives from the rolls. Next follows a projection forward of the lower knife, which is caused by the coming in contact with the stud g^4, causing the arm e to be swung back of the adjacent higher projection h on the periphery of cam H, and the subsequent tilting of the knife-frame by the depression of the stud d^3 when the cam G^1 strikes the roller g, the tilting motion being conveyed through the slotted segment. The swinging frame now vibrates several times, and the several plaits i i are produced and passed between the rollers, the knives forming one plait at a time.

The movement of the cam H then brings one of the recesses h^1 to the stud g^4, which thereupon falls into said recess, the lever g^3 being properly actuated by a spring, v. This movement projects the link-bar g^2 and throws forward the arm e, and with it the stud d^3, to the opposite end of the slotted segment, which is then moved by the depression of the rod f and connections with shaft G^2. The knife-frame is thus tilted, and the relative position of the knives changed. The swinging frame continuing to vibrate a portion of the cloth is fed without folding. The next succeeding movement of the swinging frame causes several underlying plaits to be formed, as shown at i' i'. Between the two sets lies the box-plait.

When the requisite number of the plaits i' are completed the cam H has reached a point where the protuberance h^2 comes in contact with the stud g^4. This throws the stud d^3 to the center of the slotted segment, and causes the knives to assume their normal position. The next series of plaits is the overlapping, and the intervening portion of the cloth is a reverse box-plait.

To have any number of plain or knife plaits formed, the dog I′ is released from its ratchet, and the motion of the cam arrested. After the parts have reached their normal positions the stud d^3 is swung or moved to the rear end of the slotted segment by the spring p, the end of the link-bar g^2 being slotted to allow the required pivotal play. The upper end of arm e is also slotted to allow play for the stud d^3.

The length of plait is regulated by adjusting the arm M^1 on the crank M^2, which is pierced at intervals for the reception of the adjusting-bolt.

Having now described my invention, I claim as new and desire to secure by Letters Patent—

1. The combination of the plaiting-knives C C′, the rollers B B′, cams G^1 H, with intermediate and co-operating mechanism, substantially as described, whereby the knives, while in one relative position, are reciprocated two or more times to form a set of obverse knife-plaits, and then changed in position and similarly reciprocated to form a box-plait and a set of several reverse knife-plaits, as set forth.

2. The reciprocating knives C C′, in combination with the cams H G^1, levers g^3 G, connections f' g^2, arm e, rod f, stud d^3, and slotted segment d^2, substantially as described.

3. The reciprocating knives C C′, in combination with the cam H and the intermediate connections g^2 g^3, &c., substantially as described.

4. The screws R R, in combination with the frame D and pivoted knives C C′, as shown and set forth.

5. The combination, in a plaiting-machine, of the following instrumentalties, to wit: a pair of reciprocating and relatively reversible plaiting-knives, a swinging frame to support and reciprocate the same, a pair of cams to change the relative position of said knives, and a set of mechanical devices operating through and in conjunction with said cams for the purposes of swinging said frame and changing the relative positions of said knives, substantially as described.

6. The tilting-frame D holding the plaiting-knives C C′, in combination with the swinging frame E and press rolls B B′, substantially as described.

7. The combination, with the cam H, for the purpose set forth, of the ratchet I and dog I′, substantially as described.

In testimony that I claim the foregoing I have hereunto set my hand.

JAMES H. ROWE.

Witnesses:
T. B. GOODALE,
E. D. GRANT.