May 23, 1944. W. M. MARKER ET AL 2,349,668

BLOWER

Filed Aug. 2, 1940 2 Sheets-Sheet 1

Fig. 1.

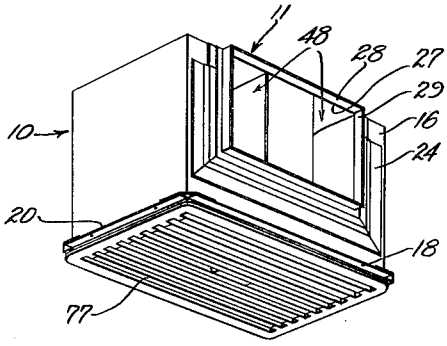

Fig. 2.

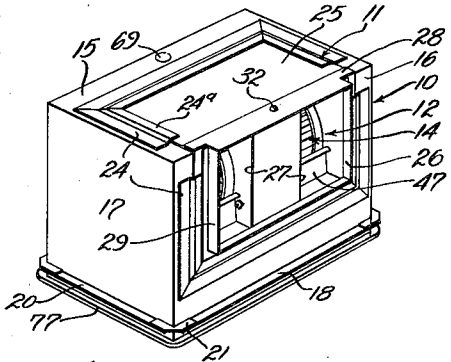

Fig. 3.

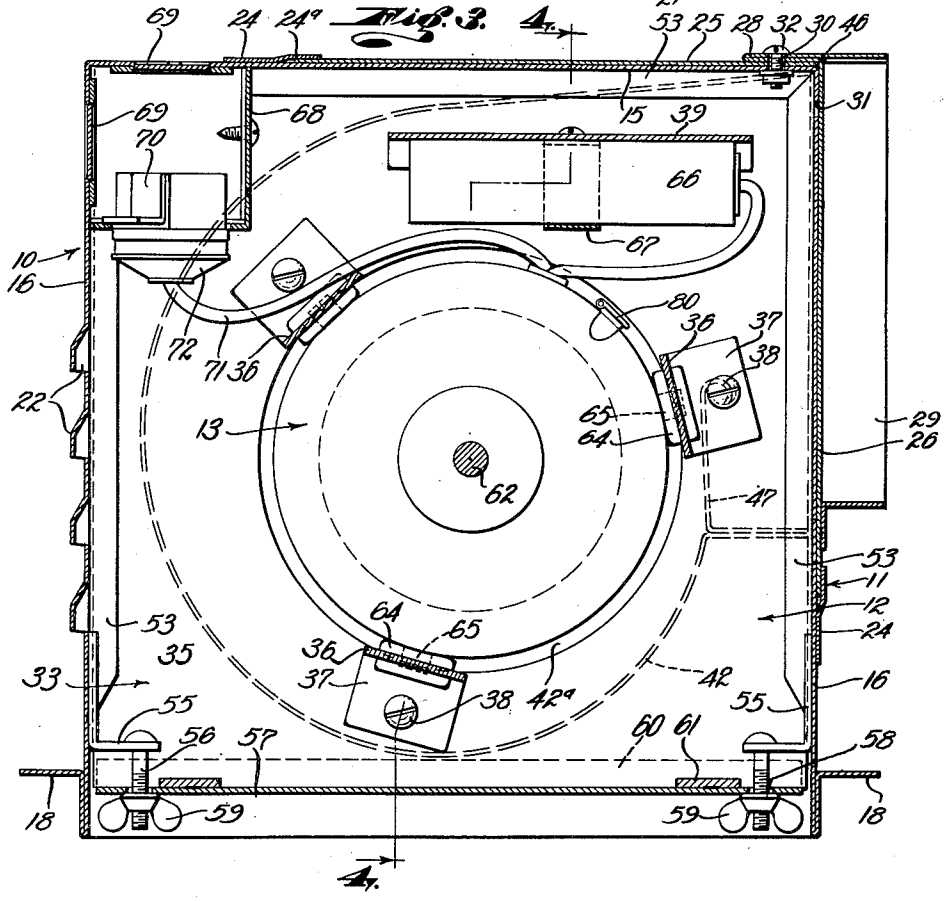

Inventors
William M. Marker
and
Andrew G. Orear
By Wm. H. Campbell
Their Attorney

May 23, 1944. W. M. MARKER ET AL 2,349,668

BLOWER

Filed Aug. 2, 1940 2 Sheets-Sheet 2

Fig. 4.

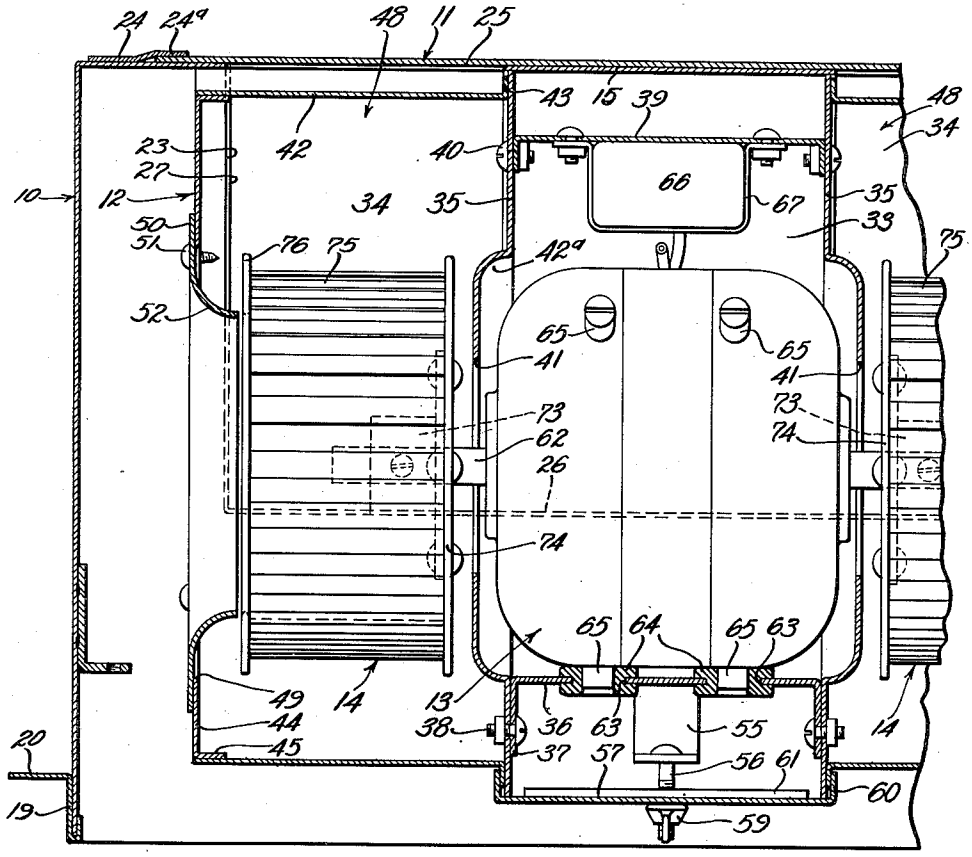

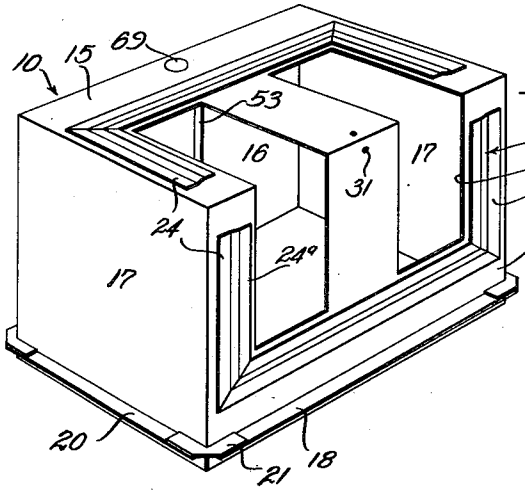

Fig. 5.

Inventors
William M. Marker
and
Andrew G. Orear
By
Their Attorney

Patented May 23, 1944

2,349,668

UNITED STATES PATENT OFFICE

2,349,668

BLOWER

William M. Marker, Los Angeles, and Andrew G. Orear, Glendale, Calif., assignors to Trade-Wind Motorfans, Inc., Los Angeles, Calif., a corporation of California

Application August 2, 1940, Serial No. 349,387

10 Claims. (Cl. 98—43)

This invention relates to a blower and relates more particularly to a blower adapted for installation in the kitchens, bathrooms and other compartments and rooms of residences, clubs, offices, restaurants, etc. A general object of this invention is to provide a compact, easily installed blower that is quiet and very efficient in operation.

Another object of this invention is to provide a blower proportioned and designed for installation in the joist spaces, stud spaces and similar wall, ceiling and partition spaces of residences and other building structures and embodying highly efficient centrifugal type or squirrel cage blower wheels to assure the maximum delivery or removal of air with a minimum of sound.

Another object of this invention is to provide a blower of the character referred to that is in the form of a single, compact unit having a single case for the motor, blower compartments, blower wheels, and other parts.

Another and important object of the invention is to provide a blower of the character referred to which may be positioned and conditioned to discharge the air vertically or to discharge the air horizontally at either side of the case without making time consuming alterations in the structure, duct system or building structure. The improved blower of the present invention is universally adaptable to practically all installation spaces and conditions and a single type or model is adaptable for all intended uses, making it unnecessary to manufacture vertical types, horizontal types, etc.

Another object of this invention is to provide a blower of the character mentioned embodying novel interchangeable closure means and discharge-duct adapter means making the unit adaptable for both vertical and horizontal duct connections when installed in a ceiling, or the like.

Another object of the invention is to provide a blower of the character mentioned in which the motor and blower wheels form parts of an assembly or unit that may be bodily removed from the case with ease to facilitate cleaning, lubricating and servicing.

Another object of this invention is to provide a blower of the character referred to embodying means for cooling the motor by air drawn or induced from an attic space, stud space, or from the exterior of the building so that the motor is maintained at a low temperature for efficient operation and long life without subjecting the motor to the moisture bearing, grease bearing, or contaminated air of the kitchen or other compartment being ventilated.

Another object of the invention is to provide a blower of the character referred to in which the motor is fully protected and isolated from the moisture bearing, grease bearing and dust bearing air from the ventilated room or compartment.

A further object of the invention is to provide a simple, inexpensive blower of the character referred to embodying effective means for dampening vibration of the moving parts.

The various objects and features of our invention will be fully understood from the following detailed description of a typical, preferred form and application of the invention, throughout which description reference is made to the accompanying drawings, in which:

Fig. 1 is a perspective view of the blower provided by this invention showing the inlet grill and the duct adapter at one side of the case. Fig. 2 is a perspective view of the blower showing the closure at the top of the case and the duct adapter at the side of the case. Fig. 3 is an enlarged, vertical, detailed, sectional view of the central portion of the blower, showing the motor and other parts in elevation. Fig. 4 is an enlarged, fragmentary, vertical, detailed, sectional view taken as indicated by line 4—4 on Fig. 3 with the motor and blower wheels in elevation. Fig. 5 is a perspective view of the blower case.

The improved blower of the present invention may be said to comprise, generally, a housing or case 10, means 11 on the case 10 adapting the same for either vertical or horizontal discharge duct connections, and a removable and shiftable motor and blower wheel unit in the case 10 comprising a blower chamber and supporting structure 12, a motor 13, and blower wheels 14.

The case 10 serves to house and support the various other parts of the blower and is designed for installation in the joist spaces and stud spaces of the ceiling, wall, partition, or like part of a building structure. In the following description it will be assumed that the case 10 is positioned as installed in a ceiling, in which case it has a top 15, sides 16 and ends 17. The case 10 is a hollow, box-like, generally rectangular structure and its lower end is open to form the air inlet and to facilitate the insertion, removal and servicing of the motor and blower wheel unit. The case 10 may be formed of sheet metal and its several parts may be welded together or otherwise connected. Means is provided for facilitating the ready installation of the case 10. The

metal of the case sides 16 is turned up along the lower edges of the sides to lie flush against their external surfaces and is then turned out or horizontally to present horizontal securing flanges 18. Strips 19 of sheet metal and of angular shape are arranged against the lower edge portions of the case ends 17 to present outwardly directed horizontal flanges 20. The strips 19 may be curled or rounded over the lower edges of the ends 17 and welded to the ends. The flanges 20 lie in the same horizontal plane as the flanges 18 to form continuations of the flanges 18 and corner strips 21 connect the flanges 18 and 20 at the corners of the case 10 to strengthen the structure. The flanges 18 and 20 may have spaced openings for the reception of nails, screws, or other attaching means. It is usually preferred to provide strips of wood or a wooden frame (not shown) at the opening in the wall or ceiling which is to receive the ventilator and the flanges 18 and 20 may be secured to such strips or frame to mount the ventilator.

One side 16 of the case 10 is provided with a series of louvers 22 spaced midway between its ends and preferably formed to face downwardly at the exterior of the case. The other side 16 of the case 10 and the case top 15 have two spaced slots or openings 23. The openings 23 are rectangular and of the same size. The elongate openings 23 are equally spaced at opposite sides of the central vertical plane of the case 10 and in the particular arrangement shown they adjoin and are continuous, each opening extending into both the top 15 and the sides 16. It will be apparent that the openings might, in some cases, be spaced apart. The slots or openings 23 preferably have portions of equal length in the top 15 and side 16.

The means 11 for adapting the case 10 for either vertical or horizontal air discharge duct connections is a feature of the invention. The means 11 serves to cover or close portions of the above described openings 23, while facilitating the connection of a discharge duct with the open or uncovered portions of the openings. The means 11 preferably includes guides or retaining strips 24 on the case top 15 and the case side 16 adjacent the openings 23. The strips 24 may be formed of sheet metal and the two strips may be identical. The strips 24 are U-shaped in plan or face view, each having arms or side parts extending in parallel relation to the outer walls of the openings 23 and a transverse or connecting part extending along the case 10 at the ends of the openings. It is preferred to space the strips 24 from the openings 23. As best illustrated in Figs. 3 and 4 of the drawings, the strips 24 are formed or bent so that their inner marginal portions 24^a are clear of or spaced from the external surfaces of the case 10.

The means 11 further includes a transferable closure 25 and duct adapter 26. The closure 25 may be a simple, flat, rectangular sheet metal member, proportioned to be slid under the raised portions 24^a of the strips 24 to cover the portions of the openings 23 at the top 15 or the case side 16. The duct adapter 26 comprises a rectangular sheet metal member adapted to be slid under the strip portions 24^a and provided with spaced openings 27 for registering with portions of the openings 23. A flange 28 extends along one longitudinal edge of the adapter 26 and this flange is adapted to be arranged at either the case top 15 or the case side 16 depending upon the location of the adapter. The flange 28 may be an integral part of the adapter 26. An outwardly projecting rim or flange 29 is provided on the adapter 26 to surround the openings 27 and the portion of the adapter between the openings. One longitudinal part of the flange 29 may be an integral portion of the flange 29 turned back and extended from the outer side of the adapter, while the remaining sides of the flange 29 may be shaped from a single continuous strip of sheet metal flanged and welded to the adapter and connected with the first mentioned longitudinal portion. In the drawings we have shown the flange 29 of rectangular form to receive or extend into the end portion of a correspondingly shaped discharge duct or discharge duct fitting, it being understood that the flange 29 may be cylindrical or shaped as desired. The openings 27 of the adapter 26 are located and proportioned to have full communication with the portions of the case openings 23 at the case top 15 or side 16 when the adapter is in its proper position under a retaining strip 24.

The closure 25 and the adapter 26 are interchangeable, that is, either one may be engaged under the strip 24 at the top 15 or at the case side 16. When the closure 25 is arranged at the case top 15 and the adapter 26 is arranged at the side 16, as illustrated in the drawings, the case 10 is conditioned for connection with a horizontally extending air discharge duct. With the adapter 26 engaged in the strip 24 at the case top 15 and the closure 25 engaged with the strip 24 at the case side 16, the ventilator is conditioned for connection with a vertically extending air duct. Openings 30 are formed in the outer edge portion of the closure 25 and the flange 28 of the adapter 26 to communicate with one another and to communicate with correspondingly located openings 31 in the case top 15 and side 16. A screw or bolt 32 is passed through the openings 30 and one of the openings 31 to hold the closure 25 and the adapter 26 in position. It is believed that it will be apparent how the ventilator case 10 may be readily and quickly conditioned for connection with either a horizontal or vertical air duct. The closure 25 and the adapter 26 are rather closely fitted under the strips 24 and are retained by the screw 32 so that they cannot work or vibrate.

The structure 12 provides or defines the motor chamber 33 and the blower chambers 34 and supports the motor 13 and the blower wheels 14. In accordance with the invention the structure 12 is easily inserted in and removed from the case 10 and is adapted to be positioned to direct the air either upwardly or horizontally depending upon the location of the adapter 26. The structure 12 includes a pair of spaced rectangular substantially vertical plates 35. The plates 35 are connected by spaced straps or bands 36 having end flanges 37 secured to the plates by bolts 38. The plurality of straps 36 is arranged in a horizontal circular series. A connecting member 39 somewhat wider than the straps 36 extends between the plates 35 and has end flanges secured to the plates by bolts 40 to assist in connecting the plates 35. The plates 35 have central openings 41 and are dished or pressed out around the openings 41 at 42^a to increase their rigidity and to better receive the motor 13. The space between the plates 35 constitute the motor chamber 33.

The structure 12 further includes scroll sheets or volute members 42 at the outer sides of the

plates 35. The volute members 42 are formed of sheet metal and are secured in corresponding positions to the outer sides of their respective plates 35. The inner edges of the volute members 42 have out-turned flanges 43 integrally joined to the plates 35 by welding. With this arrangement the plates 35 close the inner ends of the blower chamber 34 except for their openings 41. End plates 44 are arranged on the outer sides of the volute members 42. The plates 44 have marginal inturned flanges 45 shaped to conform and fit within the volute members 42. The flanges 45 are preferably welded to the members 42. It will be observed that the volute members 42 welded at their opposite ends and throughout their curved margins to the plates 35 and 44 provide a very strong, rigid assembly.

The volute members 42 and the end plates 44 have their outer edges at corresponding edges of the plates 35 adjacent one corner of the assembly. This is shown at 46 in Fig. 3. Angular cut-off parts 47 are arranged between the plates 35 and 44 at the inner ends of the volute members 42 and are shaped to form inner extensions of the members to increase the efficiency of the blower. The cut-off parts 47 are shaped to extend outwardly to the adjacent edges of the plates 35 and 44. The plates 35 and 44, the outer portions of the volute members 42 and the cut-off parts 47 define rectangular outlets 48 for the blower chambers 34. The cut-off parts 47 may be welded to the adjacent portions of the plates 35 and 44 and the scroll members 42. The above mentioned blower outlets 48 are of the same shape and size as the adapter openings 27 and are located to directly communicate with the openings 27 with the structure 12 in its different positions. The end plates 44 of the blower chambers 34 have openings 49 concentric with the openings 41 and proportioned to permit the insertion of the blower wheels 14. Inlet fittings 50 are arranged on the outer sides of the plates 44 at the openings 49 and are secured to the plates by screws 51, or the like. Inwardly curved lips 52 are formed on the fittings and extend through the openings 49 to provide stream-lined inlets for the blower wheels 14.

Means are provided for guiding the structure 12 into the case 10 and for securing the structure in the case. Spaced vertical angular strips 53 are provided on the inner surfaces of the case top 15 and sides 16 to cooperate with and guide the spaced plates 35 of the structure 12. The strips 53 assist in holding the structure 12 in the position where the end plates 44 are spaced a substantial distance from the case ends 17. The volute members 42 are likewise spaced substantial distances from the case walls. With the plates 44 and the members 42 spaced from the internal walls of the case 10 the air is free to flow upwardly through the case 10 to the inlet lips or mouths 52 of the blower chambers 34. The structure 12 is adapted to be positioned in the case 10 to have its outlets 48 face either vertically or horizontally. As shown in the drawings, the structure 12 is arranged to have the outlets 48 face horizontally so that they communicate with the openings 27 of the adapter 26, which is secured to the side of the case 10. If the adapter 26 is secured to the case top 15 the structure 12 is removed from the case 10, with the motor 13, wheels 14, etc., mounted therein, and is turned end for end and side for side to bring the air outlets 48 into registration with the openings 27 of the adapter 26. In either position of the structure 12 the plates 35 are guided by or cooperate with the strips 53.

The means for removably securing the motor and wheel supporting structure 12 in the case 10 includes brackets 55 secured to the inner surfaces of the case sides 16 between the guide strips 53. Studs 56 are secured to the brackets 55 and project downwardly therefrom. A retainer plate or cover 57 is arranged across the lower end of the motor chamber 33 and has openings 58 passing the studs 56. Wing nuts 59 are threaded on the lower ends of the studs 56 to support the cover 57. The lower edges of the plates 35 are adapted to bear on the retainer or cover 57 to support the structure 12 in the case 10. It is preferred to provide the retainer or cover 57 with up-turned flanges 60 to cooperate with the outer sides of the plates 35 for the purpose of steadying the structure 12 and for preventing endwise movement of the structure. The supporting member or cover 57 may be reinforced by strips 61 secured to its inner side. The cover 57 closes the lower side of the motor chamber 33 to prevent the moisture and grease laden air handled by the device from contacting the motor 13. The cover 57 also serves to prevent lubricant from the motor from dripping out of the device.

The motor 13 serves to drive or rotate the blower wheels 14 in the chambers 34. The motor 13 is of any selected type and of suitable rating. As illustrated the motor 13 is positioned horizontally in the chamber 33 to have its shaft 62 in co-axial relation with the openings 41. The opposite ends of the motor 13 are spaced from the plates 35 being received in the concave plate portions 42 with considerable clearance. The shaft 62 extends from each end of the motor 13 to project into the blower chambers 34. The driving motor 13 is supported in the series of straps 36 by an effective, vibration dampening and absorbing means. The straps 36 have spaced openings 63 and grommets or thimbles 64 of rubber, or the like, are set in the openings 63. The thimbles 64 project from the inner and outer surfaces of the straps 36 and are grooved to receive the portions of the straps surrounding the openings 63. Bolts or studs 65 are threaded in the housing of the motor 13 to have their heads received in the thimbles 64. The heads of the studs 65 dependably retain the thimbles 64 in the openings 63. The motor 13 supported by the spaced pairs or sets of yielding thimbles 64 is free floating and is insulated or isolated from the structure 12 by the thimbles so that vibration due to its operation and the operation of the wheels 14 is not transmitted to the structure. A suitable capacitator 66 for the motor circuit is secured to the member 39 by a suitable strap or clip 67.

Novel means is provided for supplying the energizing current to the motor 13. A suitable junction box 68 is secured in the case 10. The box 68 is preferably arranged in the motor chamber 33 above the louvers 22 at the juncture of the case top 15 and the louvered case side 16. Suitable knock-outs 69 may be formed in the case top 15 and side 16 at the box 68 to receive the power supply leads or the supply conduit. A conventional light socket 70 is secured in the box 68 to face downwardly at the under side thereof and the power supply leads (not shown) are connected with its terminals. A flexible

cable or line 71 comprising the motor leads extends from the motor 13 and is provided with a plug 72. The plug is adapted to be engaged or plugged in the socket 70. The line 71 is sufficiently long to allow the plug 72 to be engaged in the socket 70 with the structure 12 in either of its positions. The socket 70 is accessible through the lower end of the motor chamber 33 so that the plug 72 may be easily engaged in the socket following the positioning of the structure 12 in the case 10.

Suitable lubricant fittings or oil cups 80 are provided on the motor 13. The cups 80 are preferably positioned at the upper side of the motor and are spaced approximately 45° from the central vertical plane of the motor to be in generally upright positions when the structure 12 is arranged in either of its positions described above.

The blower wheels 14 are mounted on the motor shaft 62 to rotate in the chambers 34. The wheels 14 are centrifugal or squirrel-cage type blower elements. Each wheel 14 includes a hub 73 fixed to the motor shaft 62 and a disc or end plate 74 secured to the inner end of the hub. The hubs 73 are secured to the motor shaft 62 to have the end plates 74 adjacent but spaced from the plates 35. The wheels 14 further include annular or tubular series of axially extending blades 75 secured to the peripheral portion of the plates 74. The blades 75 extend outwardly toward the plates 44 and are connected at their outer ends by rings 76. The outer ends of the wheels 74 are immediately adjacent the inlet fittings 50 to directly receive the air from the inlet lips 52. The centrifugal wheels 14 operate in the well known manner to pick up the air and whirl it rapidly for expulsion through the discharge openings 48. The wheels 14 mounted on the opposite end portions of the motor shaft 62 balance the motor to provide for better motor operation.

It is usually preferred to provide a suitable grill 77 at the inlet side or open lower end of the case 10. The grill 77 may be of any selected design and is applied to the case 10 following the insertion of the structure 12. In practice the grill 77 may be larger than the lower end of the case 10 to have its edge portions overlie and engage the ceiling surface or frame around the case 10. The grill 77 may be secured in place for easy removal by any selected means.

It is believed that the operation of the device of the present invention will be readily understood from the foregoing detailed description. The housing 10 is designed for ready installation in the joist spaces of a ceiling, partition, wall, or the like. When the installation conditions have been ascertained the case 10 is adapted or adjusted for connection with a vertical discharge duct or a horizontal discharge duct, as the case may be. Where the structure is to be installed in the ceiling for connection with a horizontal duct, the closure 25 is arranged at the case top 15 and the adapter 26 is provided on the case side 16, as illustrated throughout the drawings. If the structure is to be connected with a vertical duct the positions of the closure 25 and adapter 26 are reversed, that is, the closure 25 is arranged at the case side 16 and the adapter 26 is provided at the case top 15. The closure 25 and the adapter 26 are easily engaged under the strips 24 and secured by the bolt 32.

When the case 10 has been installed and the power leads have been connected with the terminals of the socket 70, the structure 12 carrying the motor 13 and the wheels 14 is installed in the case 10. The direction of air discharge is, of course, known and the unit 12 is positioned to have the discharge passages 48 communicate with the adapter openings 27. As described above, the structure 12 may be turned end for end and side for side to bring it into position for mounting in the case 10 with the adapter 26 in either of its positions. The structure 12 is easily passed into the lower end of the case 10 and secured in place by the retainer or cover 57 and its wing nuts 59. The plug 72 is engaged in the socket 70 to connect the motor 13 with its power source. The grill 77 is then mounted in place to complete the installation.

The structure 12 is a strong, rigid unit made up of integrally connected parts formed and related to provide the greatest possible rigidity. The motor 13 is supported by the vibration dampening thimbles 64 so that little or no vibration is transmitted to the structure 12 of the case 10. The wheels 14 operating in the two chambers 34 continuously draw air through the lower end of the case 10 and discharge it through the openings 27. The motor 13 is cooled by a stream of air drawn through the louvers 22 and the chamber 33 and induced through the openings 41 into the main air streams. This motor cooling air is drawn from the attic, joist space, or the like, so that the motor is not soiled or injured by the moisture bearing, grease bearing, and dust bearing air received from the kitchen or other compartment being ventilated. When it becomes desirable or necessary to service or lubricate the ventilator the grill 77 is removed and the wing nuts 59 are removed to permit the withdrawal of the structure 12 from the case 10. The lubricant fittings or cups 80 of the motor 13 may be provided with lubricant and the apparatus may be serviced in other respects, whereupon the unit 12 may be re-installed in the case 10.

Having described only a typical preferred form and application of our invention, we do not wish to be limited or restricted to the specific details herein set forth, but wish to reserve to ourselves any variations or modifications that may appear to those skilled in the art or fall within the scope of the following claims.

Having described our invention, we claim:

1. A blower for installation in a ceiling space, or the like, comprising a case to be fixed in said space and having an open lower end and having openings in its top and a side, a motor and blower wheel unit insertable in the case from its lower end and including a blower housing having an inlet and an outlet, means for supporting the unit in the case in either of two positions to have said outlet communicate with the opening in the case top or the opening in the case side and to have said inlet communicate with the interior of the case in both positions, a discharge fitting adapted for arrangement at either of said openings, and means for securing the fitting to the case at either of said openings.

2. A blower comprising a case having an open side forming the air inlet of the blower and an opening in a second side, and a blower wheel unit insertable through said open side and comprising a blower housing having an inlet open to the interior of the case to receive air from the inlet of the blower and an outlet at said opening, a blower wheel in the housing, and a motor at the exterior of the housing for driving the wheel, the motor being out of the path of the air travelling from said open side of the case to the inlet of

the housing, and means for cooling the motor including air inlet louvers in a third side of the case and an air admitting opening in a wall of the housing providing for the induction of air from the exterior of the case through the louvers and last named opening to the air stream of the wheel, said induced air passing the motor to cool the same.

3. A blower comprising a case having an open side forming the air inlet of the blower and an opening in a second side, and a blower wheel unit insertable through said open side and comprising a chambered supporting structure having a blower chamber with an inlet open to the interior of the case to receive air from the inlet of the blower and an outlet discharging through said opening, parts on the structure which together with the case walls define a motor chamber, a motor supported by said structure to be in the motor chamber where it is out of the path of the air travelling said open side of the case to the inlet of the housing, a blower wheel in the blower chamber driven by the motor, and means for cooling the motor comprising a louver in a side of the case different from said open side for admitting outside air to the motor chamber, and a wall on the structure defining an opening which connects the motor chamber with the portion of the blower chamber behind the wheel whereby the air stream of the wheel induces air from the motor chamber.

4. A blower of the character described comprising a rectangular case open at its lower end and provided at its top and a side with openings, a blower wheel unit removably inserted through the lower end of the case comprising a pair of spaced generally vertical plates, volute housings on the outer sides of the plates having inlets at their outer ends communicating with the opposite end portions of the case and having outlets in their sides, the space between the plates forming a motor chamber, a motor in the chamber supported by the plates and having a shaft extending into the housings, and blower wheels in the housings driven by the shaft, and means for supporting the unit in the case with said outlets communicating with the openings in the case top or with said outlets communicating with the openings in the case side.

5. A blower of the character described comprising a rectangular case open at its lower end and provided at its top and a side with openings, a blower wheel unit removably inserted through the lower end of the case comprising a pair of spaced generally vertical plates, volute housings on the outer sides of the plates having inlets at their outer ends communicating with the opposite end portions of the case and having outlets in their sides, the space between the plates forming a motor chamber, a motor in the chamber supported by the plates and having a shaft extending into the housings, and blower wheels in the housings driven by the shaft, and means for supporting the unit in the case with said outlets communicating with the openings in the case top or with said outlets communicating with the openings in the case side, the last named means comprising a cover plate attachable to the case to close the lower end of the chamber and to be engaged by the lower edges of the plates with the unit in either position.

6. A blower of the character described comprising a rectangular case open at its lower end and provided at its top and a side with openings, the open lower end of the case forming the air inlet, a blower wheel unit removably inserted through the lower end of the case comprising a pair of spaced generally vertical plates, blower housings on the outer sides of the plates having inlets at their outer ends communicating with the opposite end portions of the case and having outlets in their sides, the space between the plates forming a motor chamber, a motor in the chamber supported by the plates and having a shaft extending into the housings, and blower wheels in the housings driven by the shaft, a closure and a discharge fitting interchangeably attachable to the top and side of the case at said openings, the positions of the closure and fitting being determined by the position of the unit, and means for supporting the unit in the case with said outlets communicating with the openings in the case top or with said outlets communicating with the openings in the case side.

7. A blower of the character described comprising a rectangular case open at its lower end and provided at its top and a side with openings, a blower wheel unit removably inserted through the lower end of the case comprising a pair of spaced generally vertical plates, volute housings on the outer sides of the plates having inlets at their outer ends communicating with the opposite end portions of the case and having outlets in their sides, the space between the plates forming a motor chamber, a motor in the chamber supported by the plates and having a shaft extending into the housings, and blower wheels in the housings driven by the shaft, means for supplying current to the motor comprising disconnectable plug and socket means in the case accessible through the lower end of the case, and means for supporting the unit in the case with said outlets communicating with the openings in the case top or with said outlets communicating with the openings in the case side.

8. A blower comprising a case having an open lower end forming the air inlet of the blower and air discharge means, a blower wheel unit insertable through the lower end of the case comprising a pair of spaced plates, housings on the outer sides of the plates having discharge passages for communicating with the discharge means, the edges of the plates cooperating with the side walls and top wall of the case so that the space between the plates forms a motor chamber, spaced members extending through said chamber and connecting the plates, a motor in the chamber having shafts extending into the housings, vibration dampening and absorbing means mounting the motor on the members, and blower wheels in the housings driven by the shaft.

9. A blower for installation in a building wall for use with a discharge duct including a blower wheel, a box-like case receiving the blower wheel and adapted to be fixed in the building wall, the case having an air inlet opening in its lower wall, an opening in its top wall and an opening in one of its side walls, the two last named openings being of similar dimensions, means for mounting the blower wheel in the case to discharge through either of said two last named openings as selected, a closure for either of said two last named openings, a discharge duct adaptor for placing either of said two last named openings in communication with the discharge duct, and means for removably securing the closure and adaptor to either the top wall or said side wall of the case whereby the closure may serve to close either of said last named openings and the adaptor may put either of said last named openings in com-

munication with the duct, the last named means comprising channel strips on the exterior of the case at each of said last named openings for receiving edge portions of the duct adaptor and closure.

10. A blower for installation in a building wall comprising a case to be secured in the wall and having an air inlet aperture in its outer wall, an opening in its inner wall and an opening in one of its side walls, mounting parts on the case at said air inlet aperture adapted to be secured to the wall so that said aperture is open at a face of the wall, an inlet grill for said aperture, a blower wheel unit insertable into the case through said air inlet aperture after the case has been fixed in the wall, the unit including an air inlet in communication with the interior of the case, a laterally directed discharge nozzle, and a part for engaging in the case to position the unit either where its discharge nozzle directly discharges the air through said opening in the inner wall, or directly discharges the air through said opening in the side wall, means independent of said grill for removably supporting the unit in the case in either of said positions, a closure for either of said openings, a discharge fitting for either of said openings, and means for removably securing the closure or the fitting at either of said openings.

WILLIAM M. MARKER.
ANDREW G. OREAR.