No. 613,856. Patented Nov. 8, 1898.

A. A. DICKSON.

MACHINE FOR MANUFACTURING BLOCKS OF PEAT.

(Application filed Nov. 10, 1897.)

(No Model.) 2 Sheets—Sheet 1.

Fig. 1

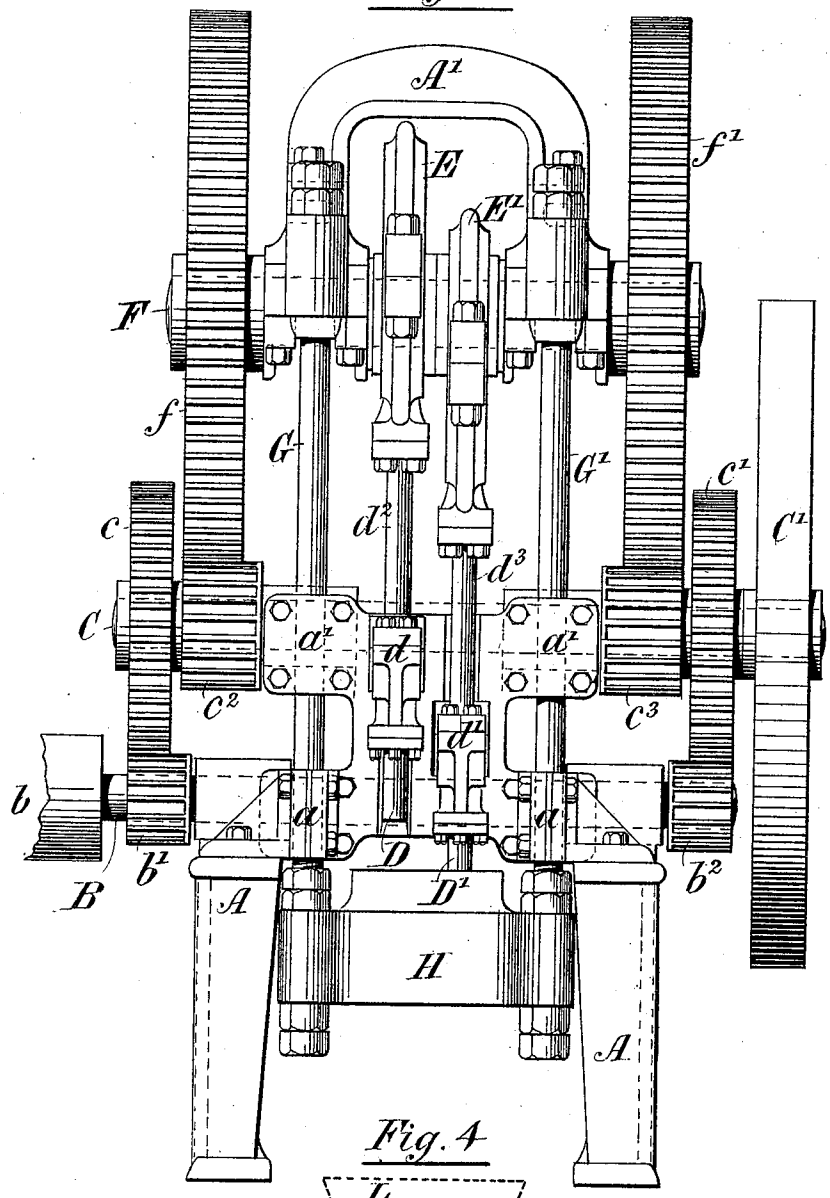

Fig. 4

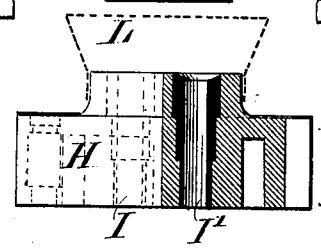

Witnesses:
Robt. A. Kellogg
C. J. Kellogg

Inventor.
Archibald A. Dickson

THE NORRIS PETERS CO., PHOTO-LITHO., WASHINGTON, D. C.

No. 613,856. Patented Nov. 8, 1898.

A. A. DICKSON.

MACHINE FOR MANUFACTURING BLOCKS OF PEAT.

(Application filed Nov. 10, 1897.)

(No Model.) 2 Sheets—Sheet 2.

Fig. 2

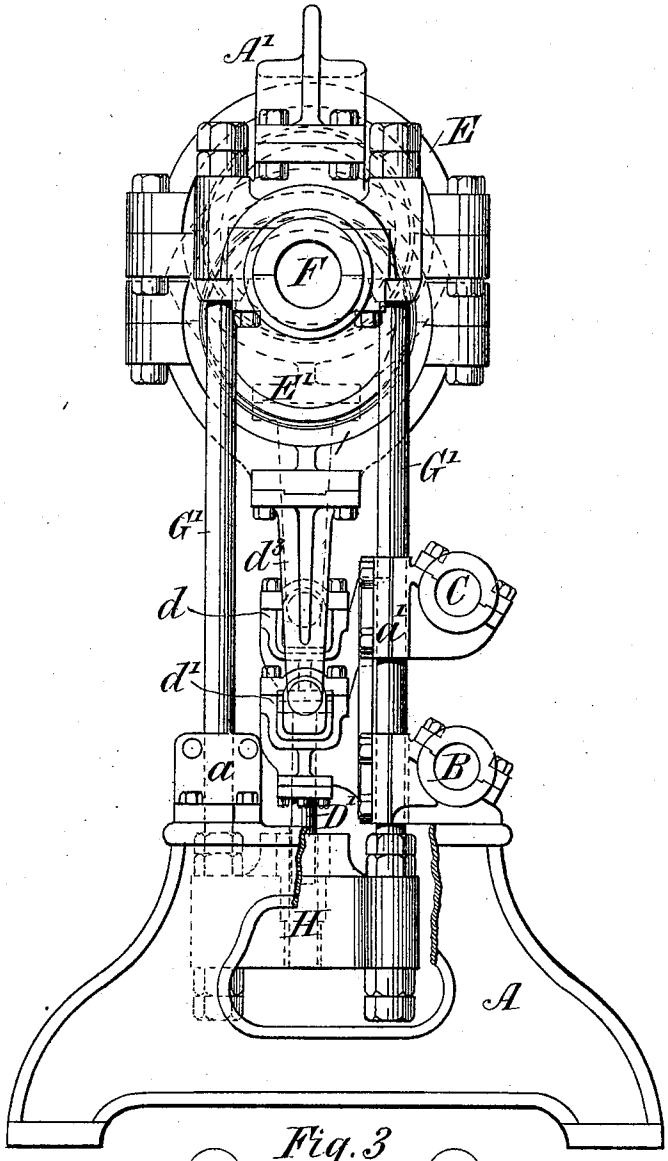

Fig. 3

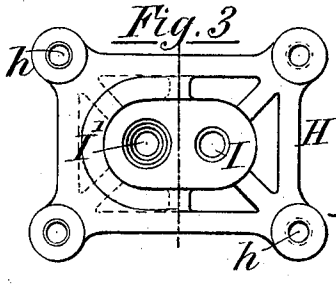

Witnesses:
H. A. Kellogg
E. J. Kennedy

Inventor.
Archibald A. Dickson

THE NORRIS PETERS CO., PHOTO-LITHO., WASHINGTON, D. C.

UNITED STATES PATENT OFFICE.

ARCHIBALD A. DICKSON, OF TORONTO, CANADA.

MACHINE FOR MANUFACTURING BLOCKS OF PEAT.

SPECIFICATION forming part of Letters Patent No. 613,856, dated November 8, 1898.

Application filed November 10, 1897. Serial No. 658,080. (No model.)

To all whom it may concern:

Be it known that I, ARCHIBALD ANDERSON DICKSON, a subject of the Queen of Great Britain, and a resident of the city of Toronto, in the county of York and Province of Ontario, in the Dominion of Canada, have invented certain new and useful Improvements in Vertical Presses, (for which I have obtained Letters Patent of Canada, No. 58,689, dated January 14, 1898,) of which the following is a specification.

This invention relates to machines for compressing and consolidating such materials as dry peat, &c., into blocks, and while more especially intended to produce blocks of a hard and dense character to be used as fuel in carrying out the final step in the process claimed by me in my application for United States Patent, filed April 5, 1895, Serial No. 544,638, the present machine is also adapted to compress peat, sawdust, and the like for distillation and carbonization into charcoal, and peat and metallic sand together, and other materials requiring consolidation, and where the resistance and friction due to their structural character are ordinarily too great to permit of their compression against a fixed surface.

The more particular features of the press constructed according to my invention are formers or male dies operated from a main (eccentric or crank) shaft and a die-block having therein vertically-arranged forming-tubes or female dies centered with the formers or male dies, such shaft and die-block being tied together in such manner as to make them mutually dependent for staying and support and for proper distribution of working strain.

The formers or male dies serve to impart a vertical compression to charges of material successively gravitating into the upper ends of the forming-tubes or female dies by successive strokes, each stroke forming a block upon the yielding base offered by the blocks previously formed and remaining within the female die member, a single resistance-block being inserted at the commencement of the operation in order to prevent the first charge of loose material from falling out at the lower end, and so as to afford a base for the formation of the first condensed block.

The reciprocation of a pair of formers results in the formation of a new block within the upper end and the simultaneous ejection of a previously-formed block at the lower end of one tube, (the whole contents thereof having a forward progression,) and the gravitation at the same time of a fresh charge of material between the other pair of die members ready for compression as the first-named former recedes.

I will now describe the construction and operation of a press of a preferred construction having two sets of dies in such detail as will enable those skilled in the art to fully comprehend the same, reference being had to the accompanying drawings, forming part of this specification.

In said drawings similar letters of reference indicate like parts.

Figure 1 is a front view of the machine complete in all its essentials. Fig. 2 is a side view of the same, but with the gears and shafts removed and part of the base broken away for greater clearness of illustration. Figs. 3 and 4 are respectively a sectional detail plan and a sectional side view of the die-block.

A is the base or bed-frame, preferably somewhat of the form shown and made rigid and heavy enough to sustain the dead-weight of a driving-shaft B, an intermediate shaft C, and the journals, gears, and fly-wheel thereof. Guideways for the cross-heads d and d' of the male dies or formers D and D′ are also provided by this frame. The cross-heads are pivoted to connecting-rods d^2 and d^3, which in turn are in connection with eccentrics E and E′, mounted upon a main or eccentric shaft F, having its journals in a head or crown-piece A′. This head or crown-piece is entirely independent of the base A, and is supported by means of collars or enlargements on two pairs of tie-rods G and G′, which also have threads and nuts on their upper ends, these rods extending downward from the head or crown-piece, passing through and being clamped and steadied by projections or lugs a a and a' a', carried by the base A, the lower ends of said tie-rods finally passing through perforations h h, arranged, preferably, at the four corners of the die-block H and firmly and rigidly secured thereto and therein by any suitable arrangement of nuts and screw-

threads or other approved means, preferably such as will allow of adjustment.

The driving-shaft B is provided with a suitable pulley b and pinions b' b^2, one on each end, which in turn intermesh with the gears c c' carried by the intermediate shaft C. The fly-wheel C' is mounted on one end of this shaft and it also carries pinions c^2 c^3, which in turn engage large gears f f', mounted upon the eccentric-shaft F, the above-mentioned gears forming two separate trains upon opposite sides of the machine, so as to effectually distribute the strain, prevent torsion, and steady the operation.

I prefer to employ eccentrics, as E E', as the means of communicating motion to the formers or male dies, as I am thereby enabled to bring the latter very close together without interfering with their effectual operation, and in consequence am enabled to reduce the width of the machine, and thus confine the strain over the minimum area and length of shafting, although I do not confine myself to the use of the eccentrics shown, as it may be possible to use an arrangement of cranks or cams which would be the mechanical equivalent of such eccentrics and involve the same theory of operation.

For practical working purposes the die-block H is preferably provided with only two vertically-arranged forming-tubes or female dies, and consequently only two formers or male dies. As I have found that so much of the value in the operation of a machine of this class depends upon the larger proportion of the stroke being had without resistance it is not advisable to employ more than a pair in one machine to be driven from the same shaft.

As seen in Figs. 3 and 4, proper steel bushings are preferably provided for the forming-tubes I and I', and some slight bevel is preferably given to these bushings at their upper edges in order to facilitate the downward passage of the material. It will also be understood that a suitable hopper of some light material, such as sheet iron or steel, will be arranged, somewhat as shown in dotted lines at L in Fig. 4, around the upper part of the die-block to receive the material and to insure the feeding of the same in successive charges by gravitation between the die members.

The operation of the above-described pressing mechanism will be generally understood from the foregoing and from the drawings, but I may explain that the double trains of gears are driven from the shaft B, and in rotating the main or eccentric shaft F impart great power to the formers D and D', and the pressure exerted upon the material in the forming-tubes is opposed by the yielding resistance and the frictional contact of the material against the walls of the tubes, and torsion of the shaft is prevented and strain upon the die-block is taken up by the tie-rods G G', the collars, threads, and nuts arranged on the latter, as shown, affording support for the weight of the parts and compensating for all tensile strain, all this being done independently of the base A or of the projections or lugs a a', the latter serving as steadiments to assist in preserving the rods in their proper vertical alinement, while the tensile strain is through their centers from the point from which the force is delivered—*i. e.*, the eccentric-shaft—to the point of resistance, which will be the formed mass of blocks within the forming-tubes or female dies in the die-block, as already stated. The feeding of raw material to the hopper L will be continuous, and the formation of the blocks will be successive and without interruption by the reciprocation of the male dies one with the other, one of such dies exercising the formative pressure upon one charge of raw material in one tube while the other is receding and another charge of material is falling toward the other forming-tube.

I deem it essential for the safe and efficient working of this press upon cold dry peat and other materials such as I have alluded to that the base or bed-frame shall only carry dead-weight and not be subject to any direct concussion such as would occur were the die-block in connection therewith, and another essential is that the formative power shall only be exerted against a resistance medium which is sustained from the point from which the force is delivered. Both of these essential features are found in my particular arrangement of the head or crown-piece carrying the driving-eccentrics and their shaft independent from and in no wise connected with the base or bed-frame, but supporting the die-block and being directly braced thereto through the medium of the tie-rods. With these exceptions I do not limit myself to details of construction or arrangement, as these may be varied or modified according to mechanical judgment without departing from the principles or sacrificing the advantages of my invention.

What I claim, and desire to secure by Letters Patent, is as follows:

1. In a press, the combination of a main or eccentric shaft, a head or crown-piece affording journals therefor, eccentrics carried by said shaft, formers or male dies operated in connection with the eccentrics, a die-block having open-ended forming-tubes or female dies in the same vertical line as and registering with the formers or male dies, tie-rods extending between and in connection with the head or crown-piece and the die-block, means for driving the main shaft, and a base or bed-frame supporting such means independently of the die-block and main shaft, substantially as and for the purpose set forth.

2. In a press, the combination of a main or eccentric shaft, a head or crown-piece affording journals therefor, eccentrics carried by said shaft, connecting-rods and cross-heads, formers or male dies operated from the eccen-

trics through the connecting-rods and cross-heads, a die-block having open-ended forming-tubes or female dies arranged so as to register with the formers or male dies, tie-rods extending between and in connection with the head or crown-piece and the die-block, gears and shafting for operating the main shaft, and a base or bed-frame supporting such gears and shafting and providing guides for the cross-heads, such base or bed-frame being independent of the head or crown-piece and of the die-block, substantially as and for the purpose set forth.

3. In a vertical press, the combination of a main or eccentric shaft, a head or crown-piece affording journals therefor, eccentrics carried by said shaft, connecting-rods and cross-heads, formers or male dies operated from the eccentrics through the connecting-rods and cross-heads, a die-block having open-ended forming-tubes or female dies arranged so as to register with the formers or male dies, tie-rods extending between and in connection with the head or crown-piece and the die-block, means for adjusting the die-block vertically, gears and shafting for operating the main shaft, and a base or bed-frame supporting such gears and shafting and providing guides for the cross-heads, such base or bed-frame being independent of the head or crown-piece and of the die-block, substantially as and for the purpose set forth.

ARCHIBALD A. DICKSON.

Witnesses:
ROBT. A. KELLOND,
E. J. CHECKLEY.