Nov. 2, 1948. J. VAN H. WHIPPLE ET AL 2,452,817

TOY BOMBING GAME

Filed Nov. 22, 1944 2 Sheets-Sheet 1

Fig. 1.

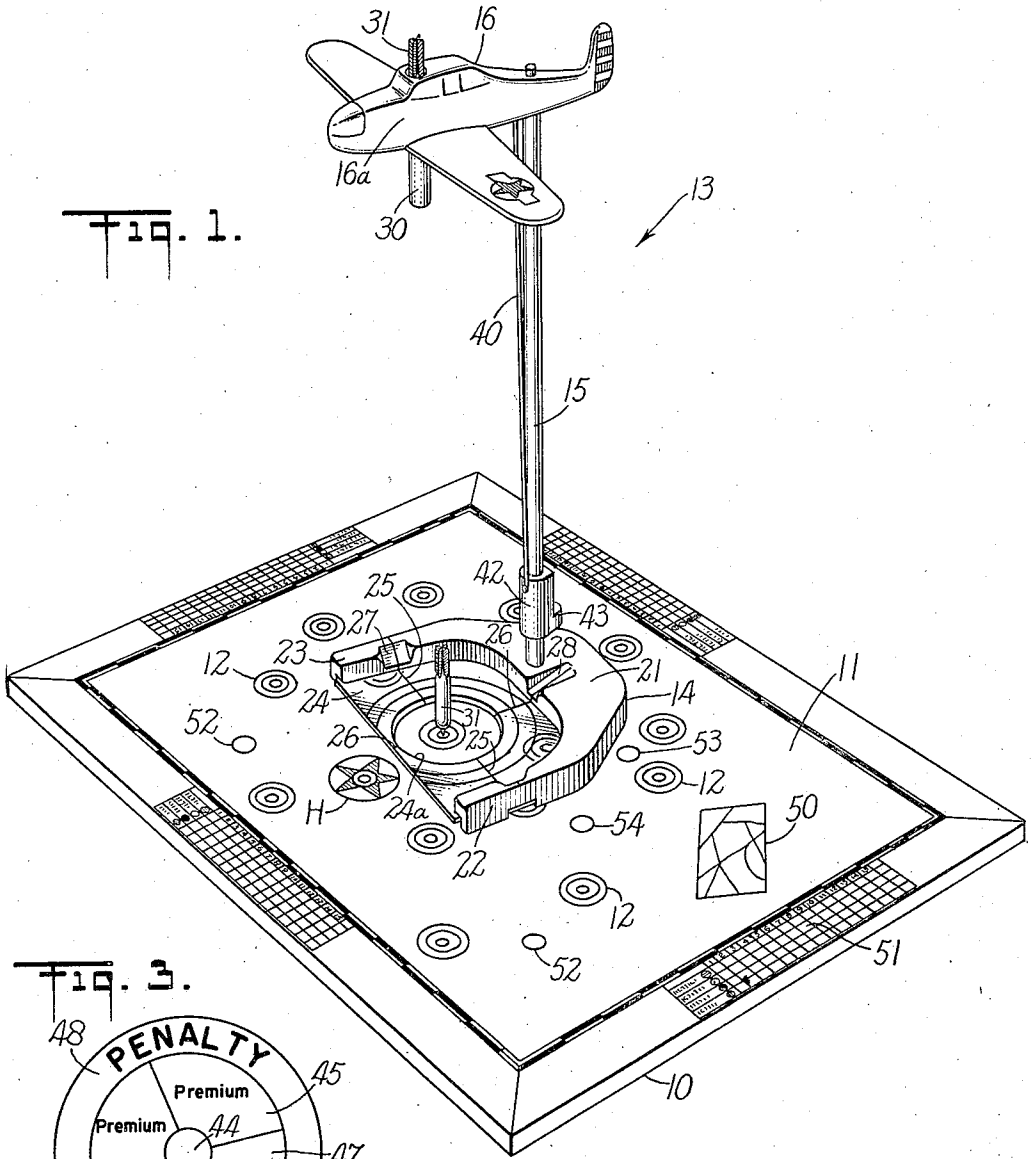

Fig. 3.

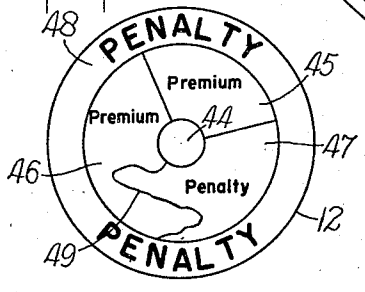

INVENTORS
Jack Van H. Whipple
Anthony B. C. Palazzo
BY
Blair, Curtis + Hayward
ATTORNEYS

Nov. 2, 1948. J. VAN H. WHIPPLE ET AL 2,452,817

TOY BOMBING GAME

Filed Nov. 22, 1944 2 Sheets-Sheet 2

Fig. 2.

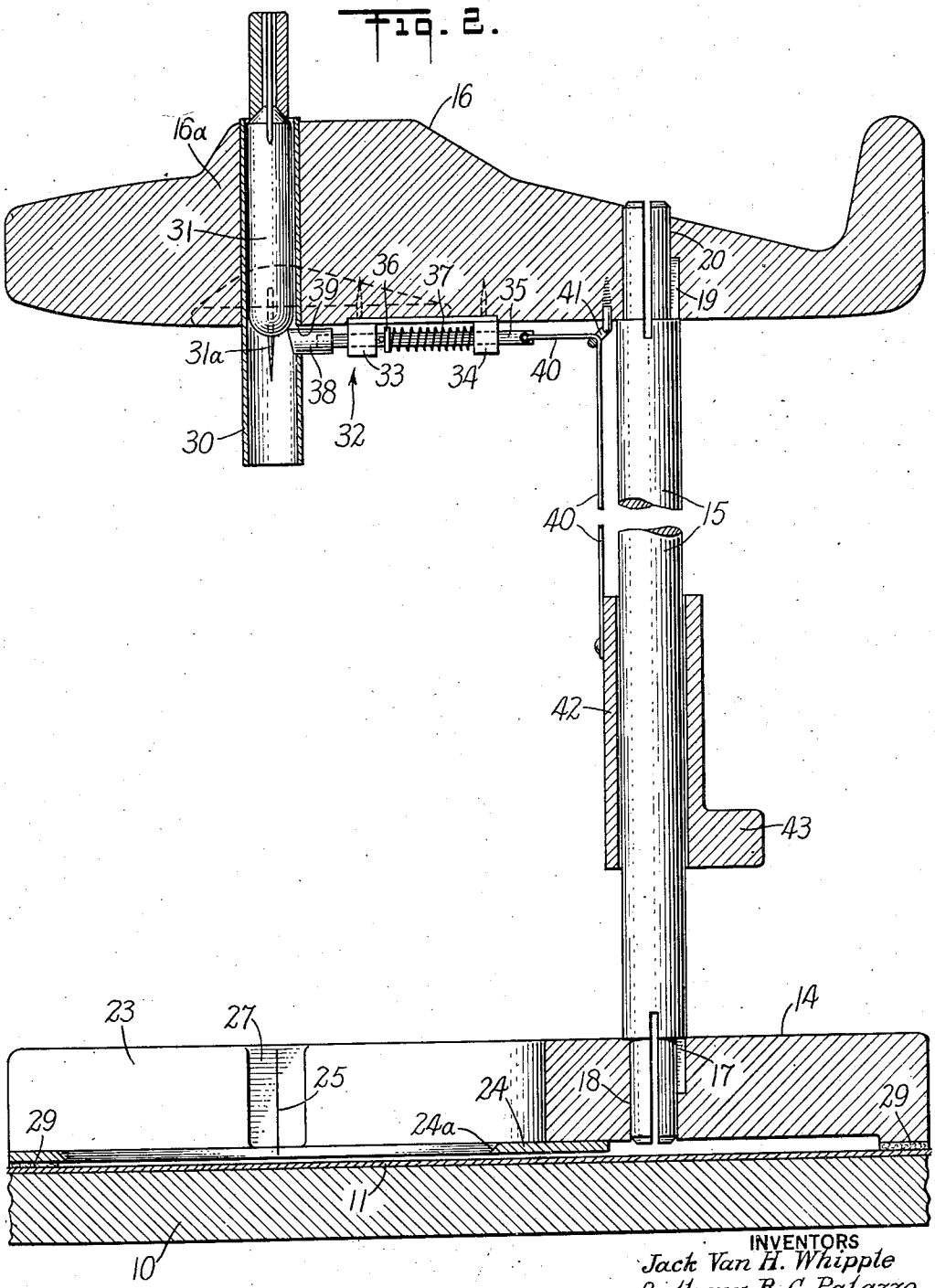

INVENTORS
Jack Van H. Whipple
Anthony B. C. Palazzo
BY
Blair, Curtis & Hayward
ATTORNEYS

Patented Nov. 2, 1948 2,452,817

UNITED STATES PATENT OFFICE

2,452,817

TOY BOMBING GAME

Jack Van H. Whipple and Anthony B. C. Palazzo, New York, N. Y.

Application November 22, 1944, Serial No. 564,617

3 Claims. (Cl. 273—95)

1

This invention relates to board game apparatus, and is intended primarily to provide a target game wherein the elements of luck and skill are combined.

Among the objects of this invention is to provide a target game the playing of which involves on the part of the players the elements of both skill and luck, as well as a certain degree of manual dexterity. Another object is to provide a game attractive to young and old, but yet of such simplicity as not to overtax the abilities of the very young. Another object is to provide a game which is attractive to the eye, unusual in appearance and sufficiently sturdy to withstand long usage. Other objects will be in part apparent and in part pointed out hereinafter.

The invention accordingly consists in the features of construction, combinations of elements and arrangements of parts, as will be exemplified in the structure to be hereinafter described, and the scope of the application of which will be indicated in the following claims.

In the drawing, wherein one form of the game is shown,

Figure 1 is a perspective view of the game;

Figure 2 is an enlarged fragmentary vertical section of the game apparatus; and

Figure 3 is an enlarged plan view of a typical target area on the game board.

Similar reference characters refer to similar parts throughout the various views of the drawing.

Before describing the game in detail, we might note that essentially it is of the target type, wherein a missile-releasing device is manoeuvered in accordance with the rules of the game relative to suitable targets on the game board, for the purpose of hitting the target with the missile upon release thereof. Thus in one form of the game the missile-releasing device may take the form of an airplane capable of holding, and upon actuation releasing, a pointed dart or other missile, so as to hit a target on the board in relation to which the airplane has been manoeuvered. Thus hitting of the target depends on the skill of the player in manoeuvering the airplane. It is, of course, to be understood that the specific form of the game board is not of the essence of our invention.

More specifically, the game includes a board 10 which may be of any suitable size, but desirably is somewhat smaller than the top of a conventional bridge table. Thus the game may be conveniently played on a card table, by any suitable number of players comfortably seated thereabout.

2

The characteristics of the playing area 11 of board 10 may be varied in accordance with the type of game the particular players may desire to play. The playing area 11 accordingly may be a removable inset carried in a shallow depression formed in board 10. Thus the game as a unit may include any desirable number of playing areas or insets 11, from which the players may select as desired. Illustratively, inset 11 in Figure 1 is provided with a number of targets 12, each of which may comprise a plurality of concentric rings, the inner of which forms a bullseye. If desired, of course, targets 12 may be formed to simulate bombing targets, such as factories, airfields, etc.

Manoeuverable over the playing area 11 of the board is a sighting and missile dropping device, generally indicated at 13 comprising a base 14, a supporting rod 15 and a toy airplane 16. As shown in Figure 2, the lower end of shaft 15 is reduced and is provided with a key 17 so that when the shaft is inserted into a suitable hole 18 in base 14, key 17 may fit into a keyway (not shown) which properly positions or orients supporting shaft 15. The upper end of shaft 15 is also reduced and is also provided with a key 19, this end of the shaft being adapted to extend into a hole 20 formed in airplane 16, key 19 fitting into a keyway (not shown) formed in the airplane to orient the airplane relative to base 14 for a purpose to be described hereinafter. Base 14, rod 15 and airplane 16 are preferably readily detachable to facilitate initial packaging thereof and later use and storage. Through the provision of keys 17 and 19 it is impossible to assemble the parts in improper relationship.

Base 14 (Figure 1) is bifurcated in form and accordingly includes a body 21 from which extend legs 22 and 23. The bottoms of these legs are rabbeted adjacent the inner portions thereof, the rabbeting extending along the bottom edge of body portion 21 so as to receive an apertured sighting device 24 which is preferably made of any suitable transparent material. In the specific form of the game shown, the sighting device may be considered a bomb sight, and in any event is provided with suitable reference lines such as lines 25 and 26 which may simulate cross hairs, the intersection thereof lying within the aperture 24a and defining a sighting point. These lines are preferably continued on the legs and body of base 14, the legs accordingly being provided with cutouts such as cutout 27, a cutout 28 being formed in body portion 21, lines 25 and 26 being extended through the cutouts. Thus the sighting

or reference lines are readily visible to the player who can estimate the position of the sighting point in aperture 24*a* by reference thereto. As shown in Figure 2, the body and legs of base 21 have secured thereto at suitably spaced intervals felt pads 29 or the like which space the base as well as sighting device 24 a suitable distance from the top of inset 11 on board 10, thus rendering manoeuvering of the airplane and sight easy and precluding damage to the inset top. Thus proper positioning of the aiming point demands skill on the part of the player for two reasons; first, the sighting point is merely a point in space and indicated only by lines 25 and 26; and second, because the sighting point defined by the intersection of lines 25 and 26 lies above the level of playing area 11 resulting in parallax which makes it difficult accurately to register the sighting point with the target when the player is seated at one side of board 10.

Airplane 16 (Figure 2) is provided with a tube 30 which extends through the fuselage 16*a* of the airplane and is open at the top as well as the bottom, in order to receive and release a dart 31 in the form of a bomb. The axis of tube 30 coincides exactly with the point of intersection of sighting lines 25 and 26 (Figure 1) so that if the intersection of these sighting lines is properly registered on a target 12, then the axis of tube 30 passes through the center of the target. Under such conditions, a dart 31 when released will hit the target dead center. Thus tube 30 might be said to be bore-sighted in relation to the intersection of the sighting lines 25 and 26, and this relationship remains undisturbed from continued disassembly and assembly of base 14, rod 15 and missile support 16 by reason of the provision of keys 17 and 18 which always effect proper relative orientation of the parts upon assembly thereof.

A target holding and releasing device is generally indicated at 32 in Figure 2, and includes a pair of bearings 33 and 34 secured in any suitable manner to the bottom of airplane 16. Reciprocably disposed in these bearings is a pin 35 having fastened thereto a washer 36 against which one end of a spring 37 presses. The other end of this spring bears against bearing 34 and accordingly pin 35 is under a bias to the left, as viewed in this figure. The left-hand end of pin 35 carries a stop 38 which projects through an opening 39 into the path of dart 31 to hold the dart and upon retraction release it.

To the right-hand end of pin 35 is fastened a cord 40 which is threaded through a screw eye 41 or the like fastened to the bottom of airplane 16 and led downwardly along supporting shaft 15 to where its bottom end is attached to a release 42 which takes the form of a slide reciprocably mounted on shaft 15. It may now be seen that when the finger piece 43 of slide 42 is pressed downwardly, pin 35 is pulled to the right and stop 38 is retracted from beneath dart 31, thus permitting the dart to drop out of tube 30 and through the opening 24*a* in sighting device 24 so that its pointed end 31*a* will stick into inset 11. If the sighting device and accordingly the airplane have been properly manoeuvered relative to a selected target area, the dart will pierce the center of the area, or in any event will pierce that point on the target which lies in the axis of tube 30.

In Figure 3 we have shown one of the target areas 12. Thus a typical target area may comprise a bullseye 44, premium areas 45 and 46 and penalty areas 47 and 48. It should be noted that premium and penalty areas 46 and 47 preferably

have an irregular common boundary 49. Thus the distribution of hits and near misses around a target point represent a random distribution, the distance of a near miss from a hit being inversely proportional to the player's skill whereas the orientation of the near miss is entirely chance. This results in a highly desirable combination in which skill and luck both have an important part. The player is rewarded for his accuracy in case he makes a direct hit. If he makes a near miss, he is rewarded or penalized on a chance basis, since it is difficult for him to foretell on which side of the target his miss will lie.

It should, of course, be understood that different types of targets may be provided. The target may be designed entirely on a skill basis in which nearness to the center gives the entire score. The target may be used entirely on a chance basis in which the center point of the target is only a point and in which the various sectors surrounding it carry numbers which are keyed to desired penalties or premiums. Or again, the targets may be used as direct indicators so that the player moves in a direction indicated by an arrow in the sector wherein a dart happens to fall. Target 12, shown in Figure 3, is a combination of the various types mentioned, as a small area in the center, when hit, gives a high reward, this small area being surrounded by sectors variously characterized as premiums, penalties or directions.

One manner in which the illustrative specific form of the game may be played is as follows, it being first understood that the object of the game is to be the first to complete the series of target missions requiring a circuit of the entire board, and to return to the home airport H successfully. Each player selects one of several bombs or darts 31, which may be variously colored for identification, and the first player inserts his bomb in tube 30. This player then manoeuvers the sighting device, and with it the airplane, until he believes that he has located the center of the target at the intersection of the sighting lines 25 and 26. Thereupon the bomb release slide 42 is depressed and the bomb 31 is released. If it hits the bullseye, the player then proceeds to the next mission. If the bomb hits outside the bullseye, but inside of the penalty ring 48, he is either penalized or given a premium, or in the event that specific directions are printed in these areas, he follows such directions. If the bomb hits in the penalty area 48, the player returns to a designated area in accordance with whatever instructions may be printed in this area. If the player's dart hits entirely outside of the target area, he tries again on his next turn.

Preferably the rules of the game are as follows: before the actual play begins, each player drops his bomb on what we have called a "special mission" chart 50 (Figure 1) having a number of irregular areas of different value marked out thereon. The player hitting the highest numbered area on chart 50 starts the game and the rest of the players follow in accordance with the numbers they hit on chart 49. Each player is allowed only one chance at a target, unless otherwise specified at a particular target area. However, when his bomb falls on the inner bullseye 44 (Figure 3), he immediately proceeds to the next target. If he misses the bullseye, he places his bomb on one of a suitable number of charts 51 (Figure 1) provided adjacent the edges of board 10. Chart 51 thus serves as a score board and also a reminder to the player of the target

he last missed, thus assuring his reentry at the proper place when it is next his turn.

Targets 12 have been made to simulate life-like conditions, thus being divided into hazards and rewards close to the objective. The outer circle or ring 43 may indicate a "flak area," and when hit require the player to return to a "repair base." The player may not then resume his mission until his next turn and until the "repair base" target has been hit. After hitting the repair base target, the player resumes his play on the same target where he failed. This same procedure may be followed for "hospital" 52, "prison camp" 53, "bail out" 54, etc.

It may be seen from the above that a variety of games may be arranged, some requiring nothing but skill on the part of the players, others involving purely chance, and still others as exemplified by the specific form disclosed hereinabove, involving a combination of skill and chance.

Accordingly, we have provided a game which attains the objects set forth hereinabove in a thoroughly practical and efficient manner.

As many possible embodiments may be made of the above invention, and as many changes might be made in the embodiment above set forth, it is to be understood that all matter hereinbefore set forth or shown in the accompanying drawing is to be interpreted as illustrative and not in a limiting sense.

We claim:

1. A game comprising, in combination, a board having one or more target areas thereon, a device including a base adapted to be slid over said board, a missile retaining and discharging member, means supporting said member above said base and in fixed relation thereto, and means associated with said member and operable to discharge a missile held therein, whereby said member may be positioned over said board in respect of one of said target areas and a missile dropped on said target area with a degree of accuracy depending upon the skill of the person manoeuvering said member, said device having associated therewith means forming an aiming point for assisting the operator of said device to adjust it accurately relative to one of said target areas, said aiming point means comprising an apertured element underlying said missile retaining and discharging member, the aiming point being located in said aperture and beng determined by reference marks carried by said means.

2. A game comprising, in combination, a board having one or more target areas thereon, a device including a base member adapted to be supported by and to be slid over said board, said base member including a sighting device having reference marks indicative of a sighting point adapted to be registered with the target to be hit, a missile retaining and discharging member including a tube in which the missile is received, means supporting said member above said base and in fixed relation thereto so that the axis of said tube passes through said sighting point, and means associated with said tube and operable to release a missile held therein.

3. Apparatus according to claim 2 wherein the base comprises a bifurcated element between the legs of which said sighting device is disposed, said legs lying on opposite sides of the axis of said tube.

JACK VAN H. WHIPPLE.
ANTHONY B. C. PALAZZO.

REFERENCES CITED

The following references are of record in the file of this patent:

UNITED STATES PATENTS

Number	Name	Date
1,374,991	Dratschke	Apr. 19, 1921
1,453,396	Leggatt	May 1, 1923
1,924,261	Thompson	Aug. 29, 1933
2,060,405	Widmeier	Nov. 10, 1936
2,145,434	Rubin	Jan. 31, 1939
2,286,151	Miller	June 9, 1942

FOREIGN PATENTS

Number	Country	Date
412,410	Great Britain	June 28, 1934